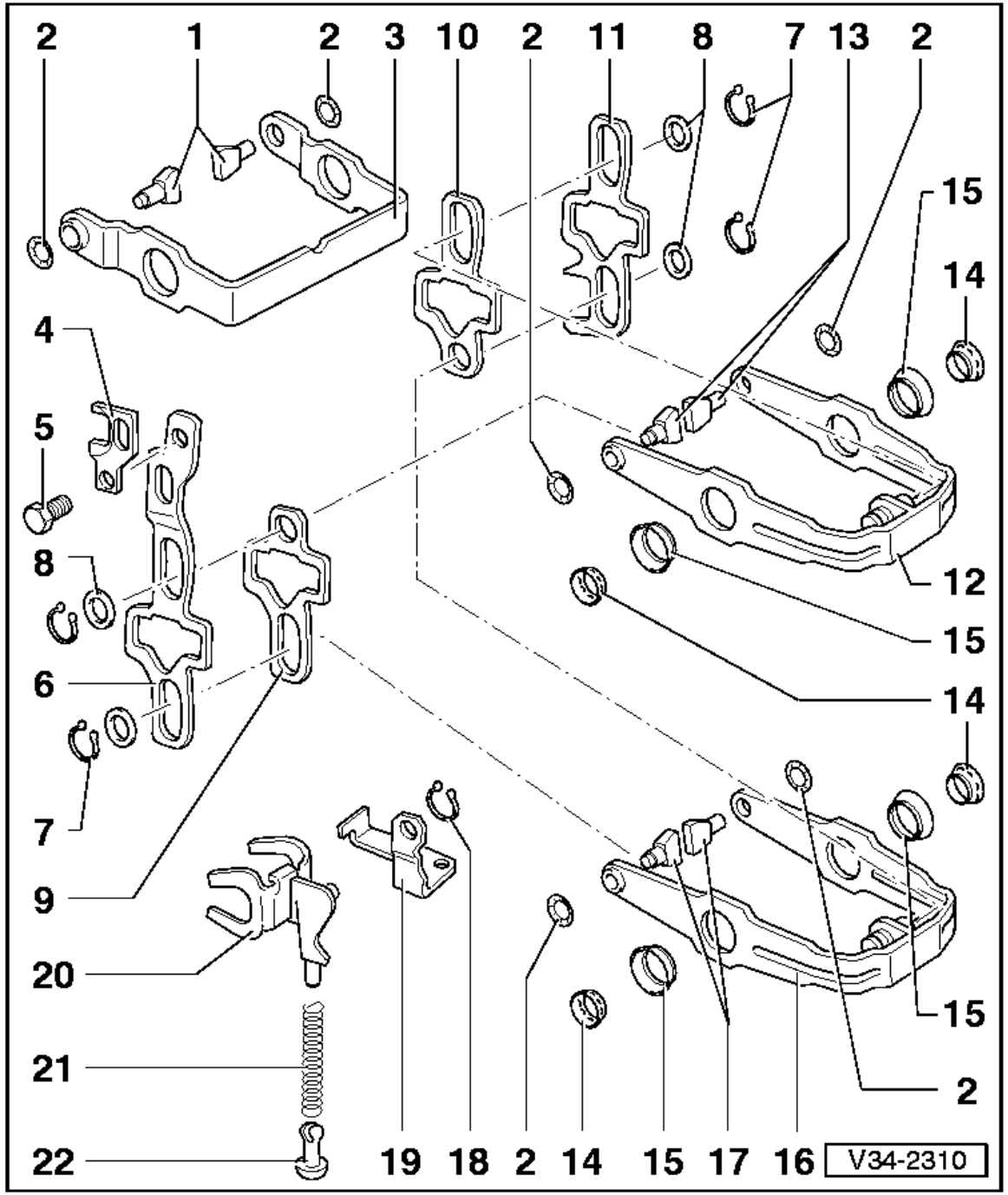

1 - Selector segment
- ◆ Identification => Fig.1
- ◆ After installing the circlip the selector segment must rotate freely

2 - Circlip
- ◆ Lever off with screwdriver
- ◆ Installing => Fig.2
- ◆ Always renew

3 - 5th gear selector fork
- ◆ Adjusting => Page 34-106

4 - 5th gear selector jaw

5 - Bolt, 25 Nm

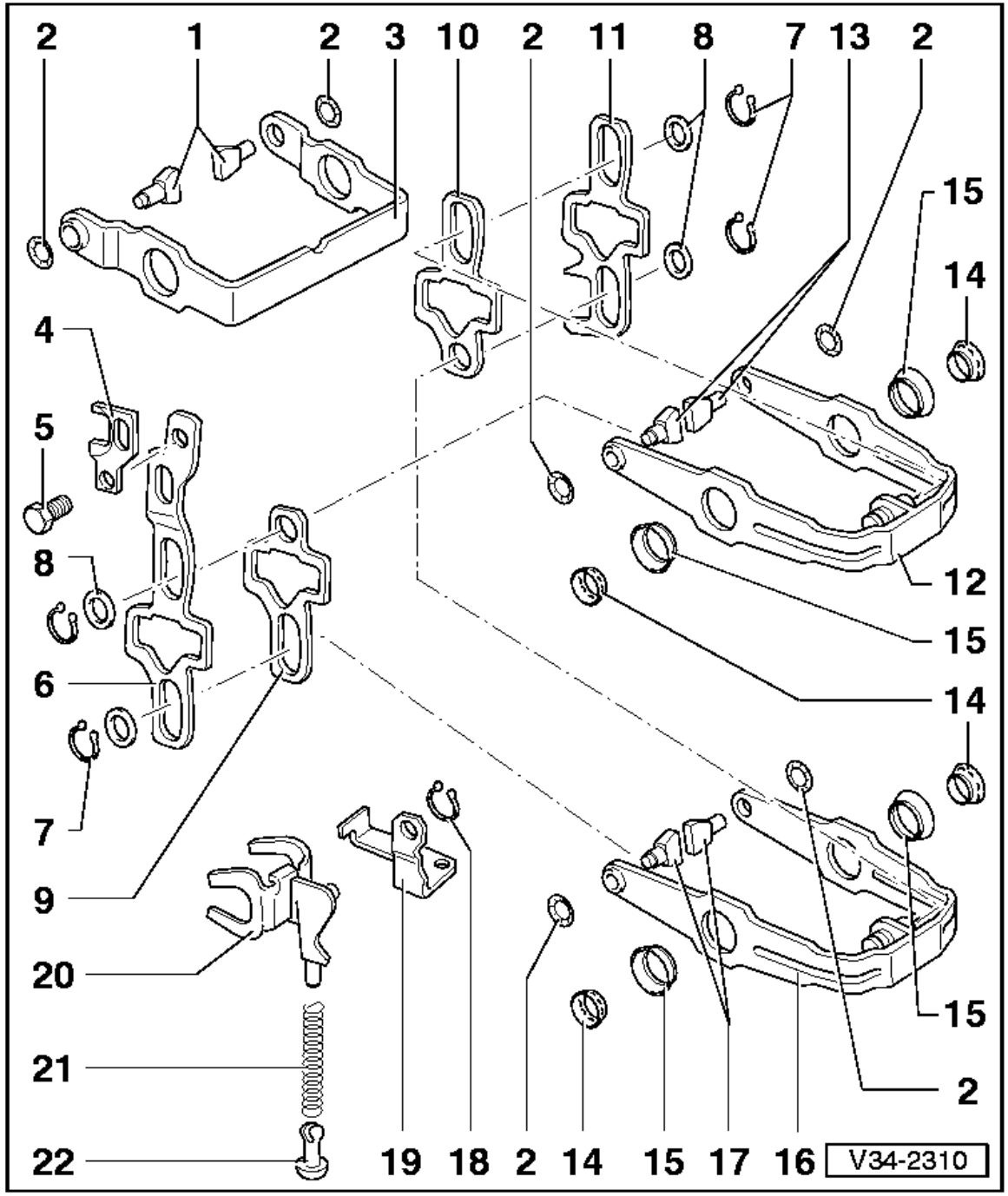

6 - 5th gear selector plate

7 - Circlip

8 - Washer

9 - 3rd/4th gear selector plate

10 - 1st/2nd gear selector plate

11 - Reverse gear selector plate

12 - 3rd/4th gear selector fork
- ◆ With selector segments => Fig. 5

13 - Selector segment
- ◆ Identification => Fig.1
- ◆ After installing the circlip the segment must rotate freely

14 - Bearing

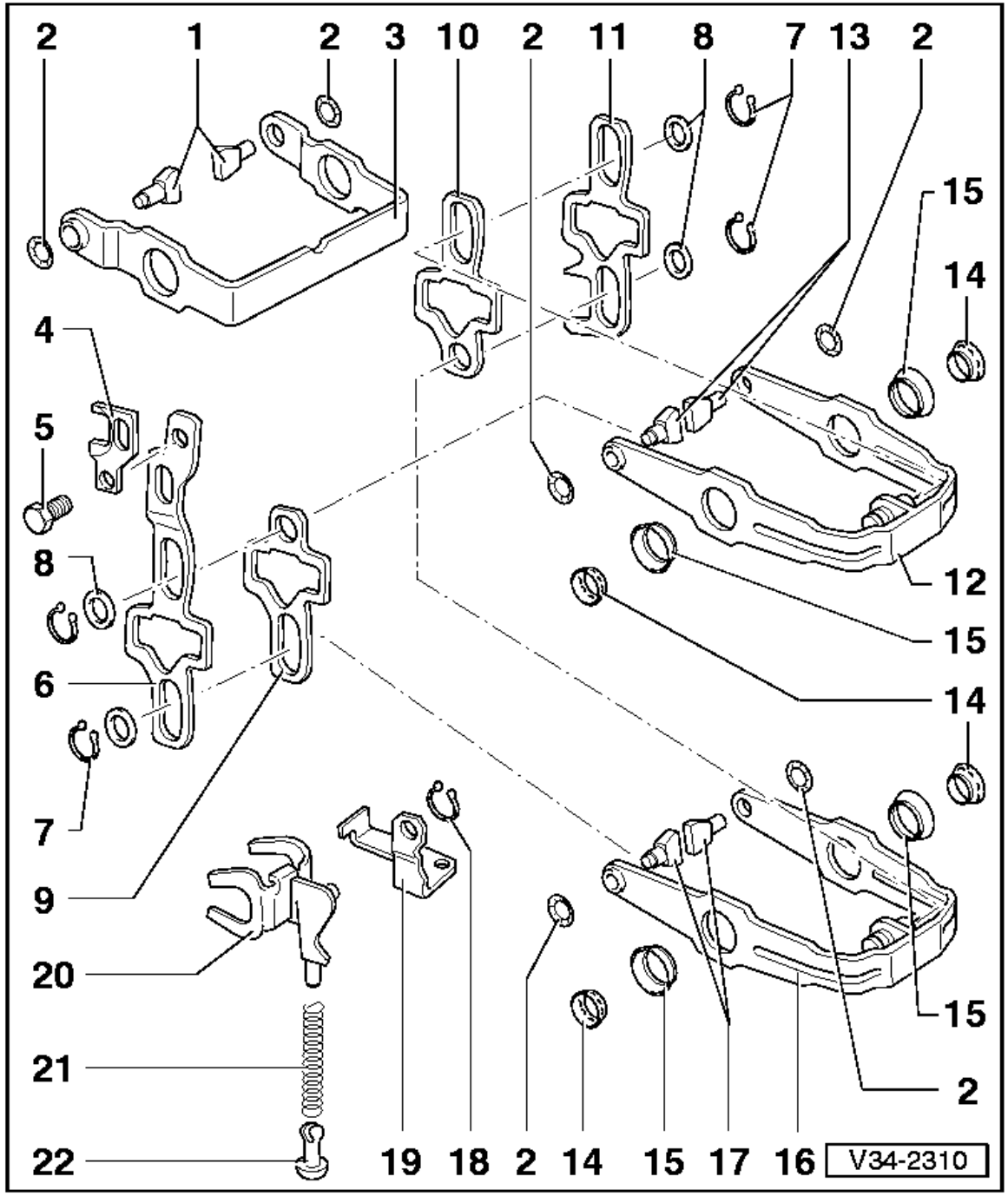

15 - Bearing inner race
- ◆ Removing => Fig.3
- ◆ Pressing in => Fig.4

16 - 1st/2nd selector fork
- ◆ With selector segments => Fig.5

17 - Selector segment
- ◆ Identification => Fig.1
- ◆ After installing the circlip the segment must rotate freely

18 - Circlip

19 - Support for reverse gear selector fork

20 - Reverse gear selector fork

21 - Spring

22 - Domed sliding piece

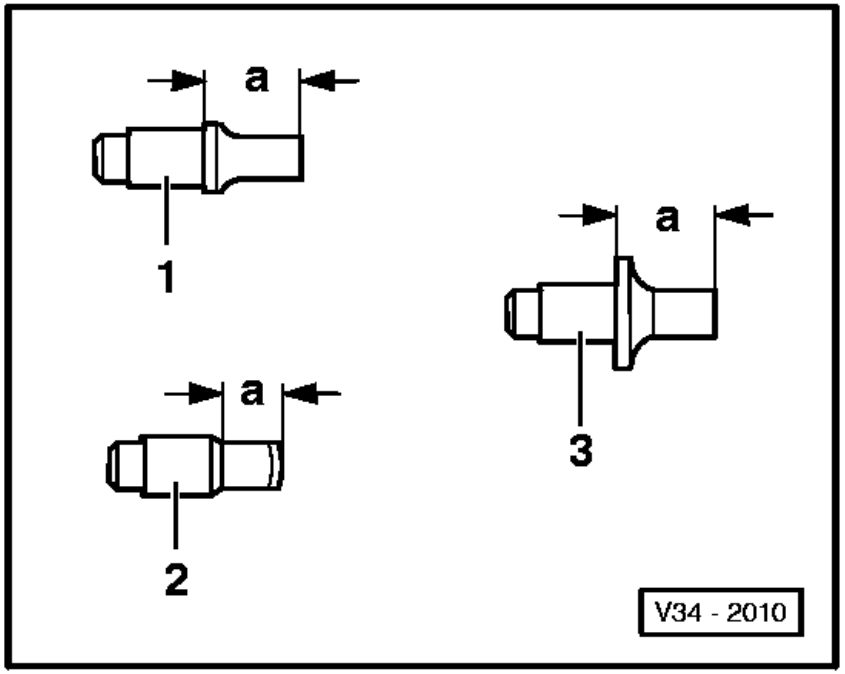

⇦ **Fig.1Identifying selector segments**

Dimension -a-

1 - 1st and 2nd gear selector segments = 12.1 mm

2 - 3rd and 4th gear selector segments = 7.7 mm

3 - 5th gear selector segments = 12.1 mm

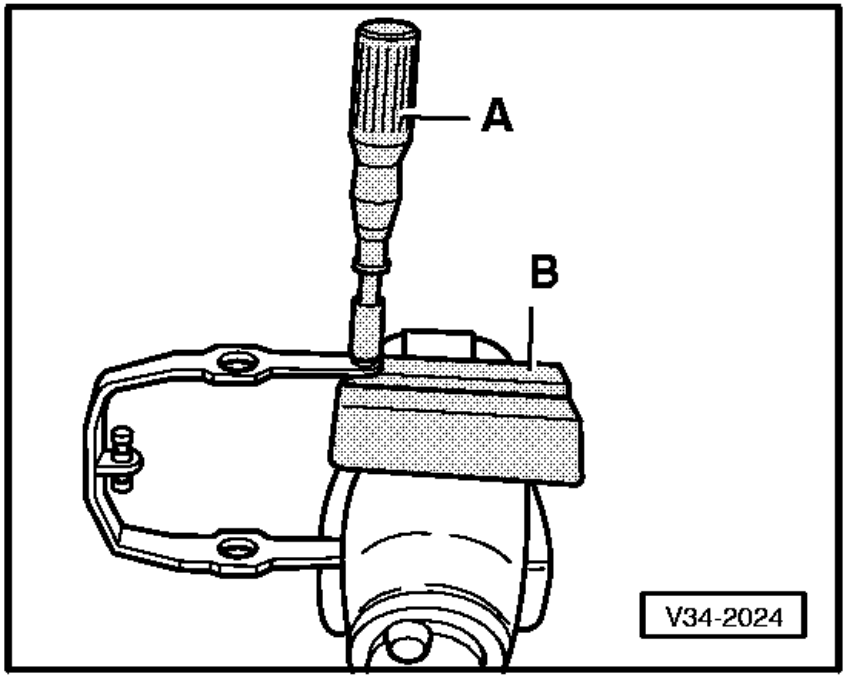

⇦ **Fig.2Installing circlip**

- Press circlip into selector segment groove with socket.

Note:

After installing the circlip the selector segment must rotate freely.

A - Socket, 10 mm A/F

B - Vice clamps

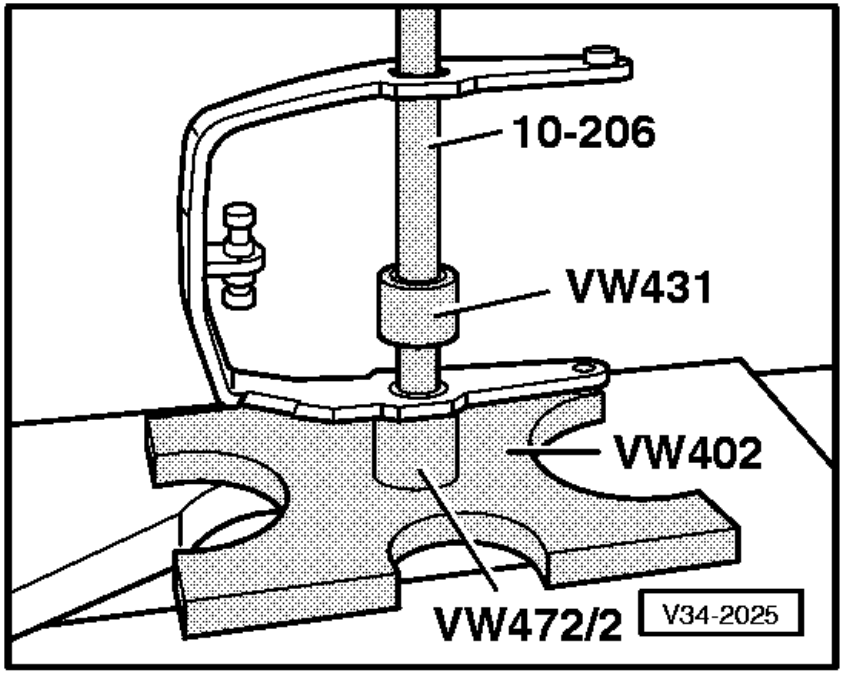

⇦ **Fig.3Removing bearing inner race**

Note:

When removing and installing the inner races do not bend selector forks.

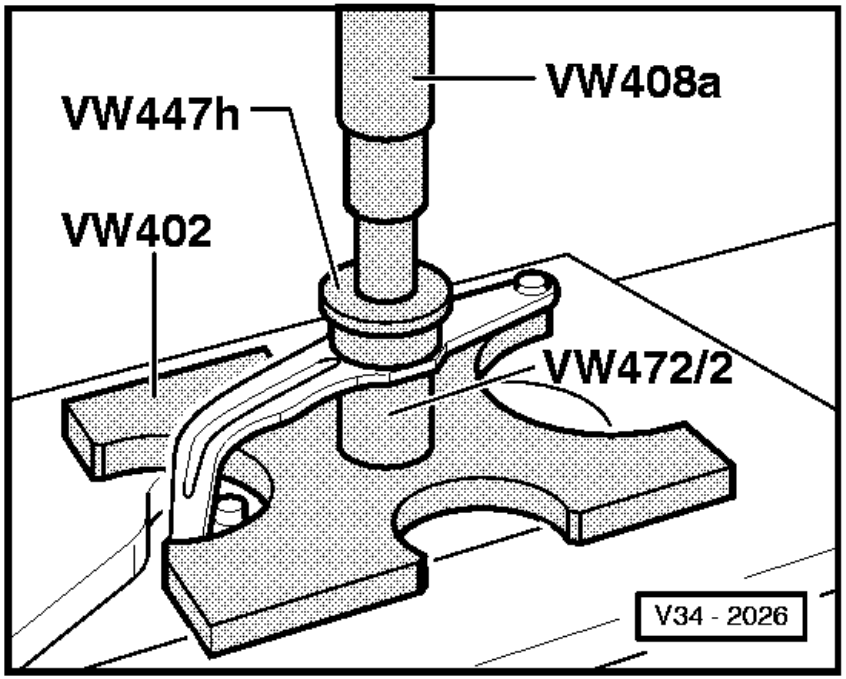

⇦ **Fig.4Pressing inner race in onto stop**

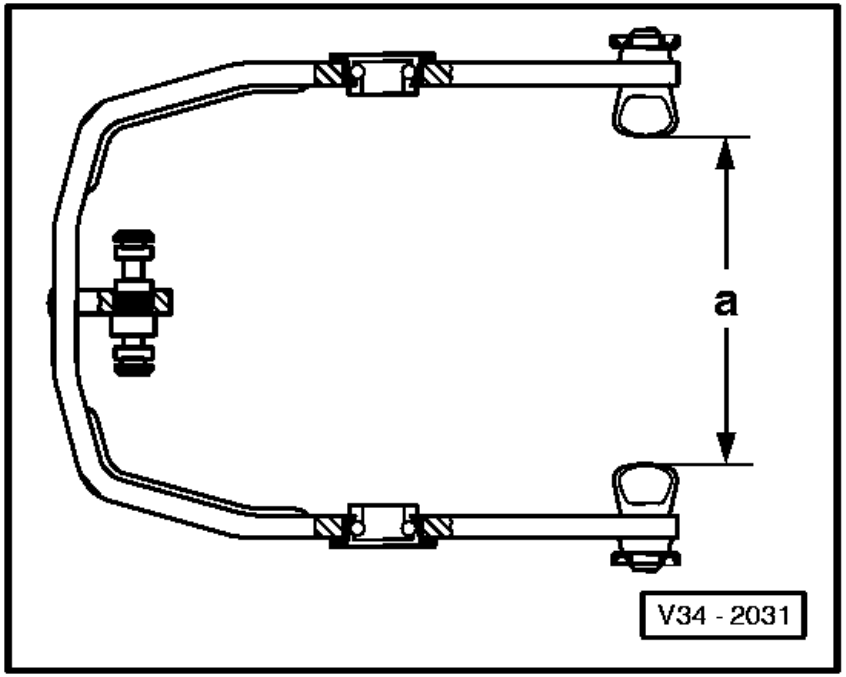

⇦ **Fig.5Selector fork with selector segments installed**

	Dim. -a- (mm)
1st/2nd gear selector fork	87.2 ... 87.9
3rd/4th gear selector forks	96.0 ... 96.7

Selector segment assignment => Fig.1.