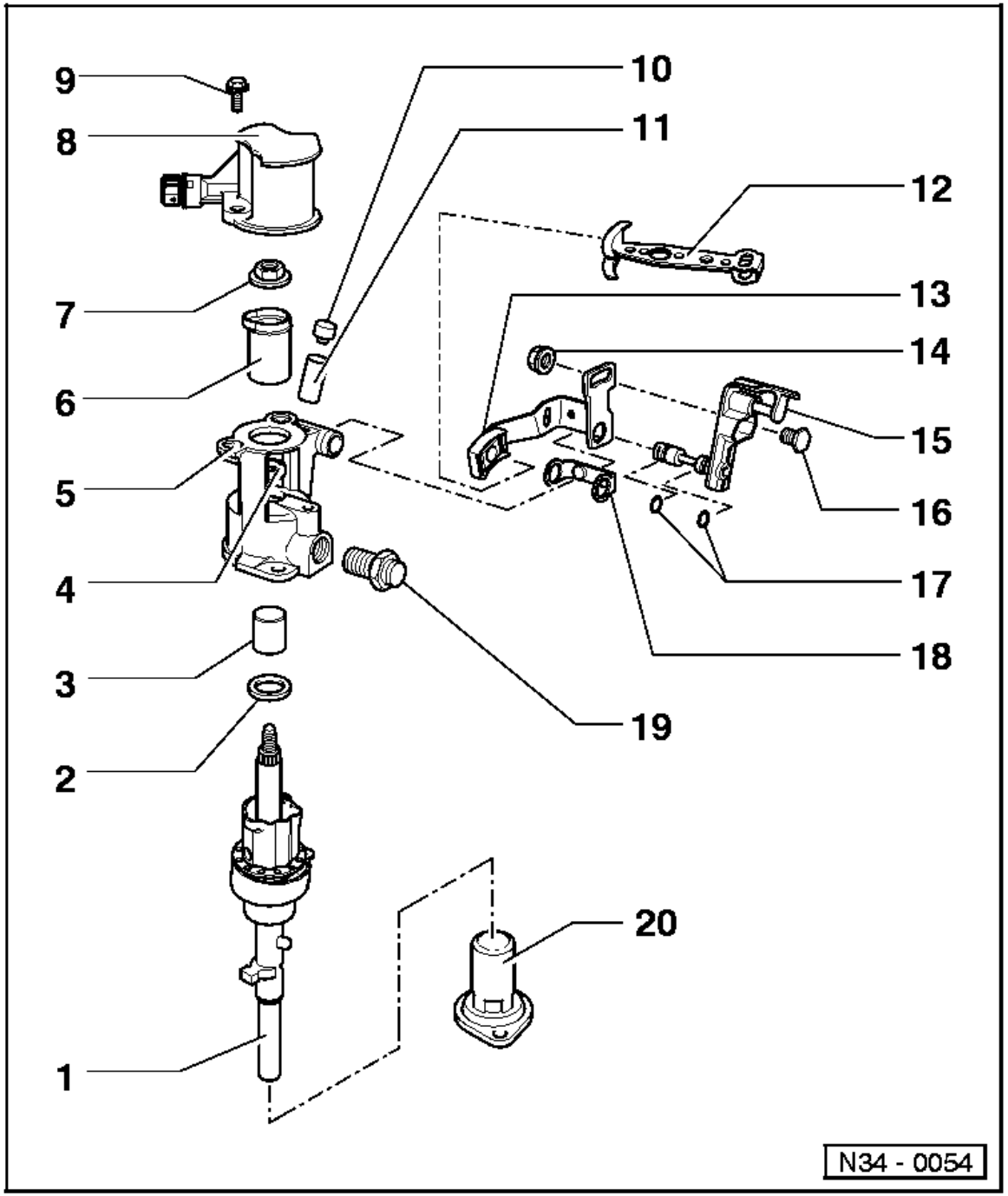

1 - Selector shaft

2 - Stop ring

3 - Ball sleeve
- ◆ Removing => Fig.1
- ◆ Pressing in => Fig.2

4 - Oil seal
- ◆ Lever out with screwdriver
- ◆ Installing => Fig. 3

5 - Selector mechanism cover

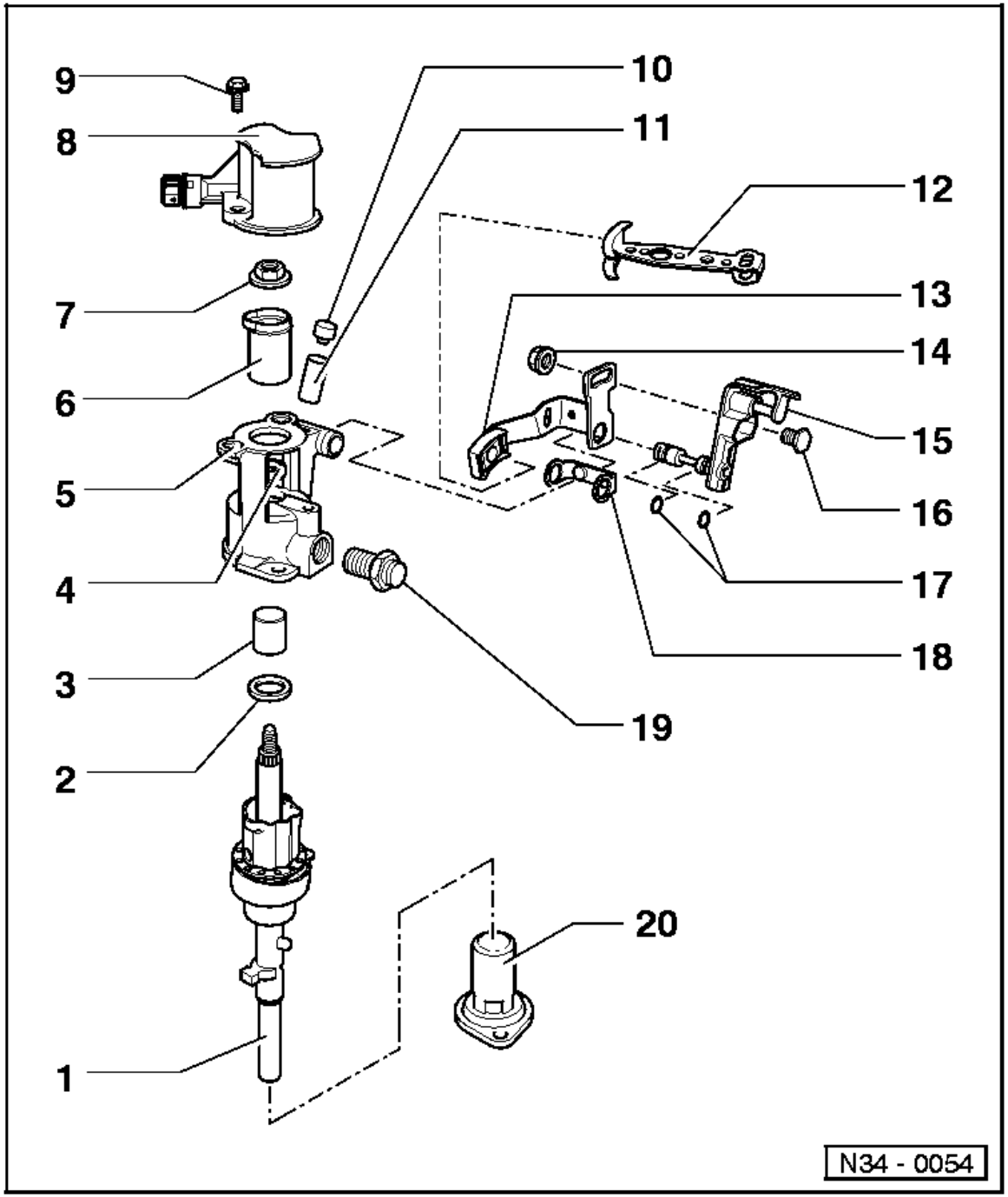

6 - Sleeve
- ◆ The lug points to reverse light switch
- ◆ Lightly coat lug with MoS2 grease

7 - Hexagon nut, 25 Nm
- ◆ Self-locking
- ◆ Always renew

8 - Housing
- ◆ For reverse light switch

9 - bolt

10 - Cap
- ◆ For gearbox breather

11 - Sleeve
- ◆ Knock-in onto stop

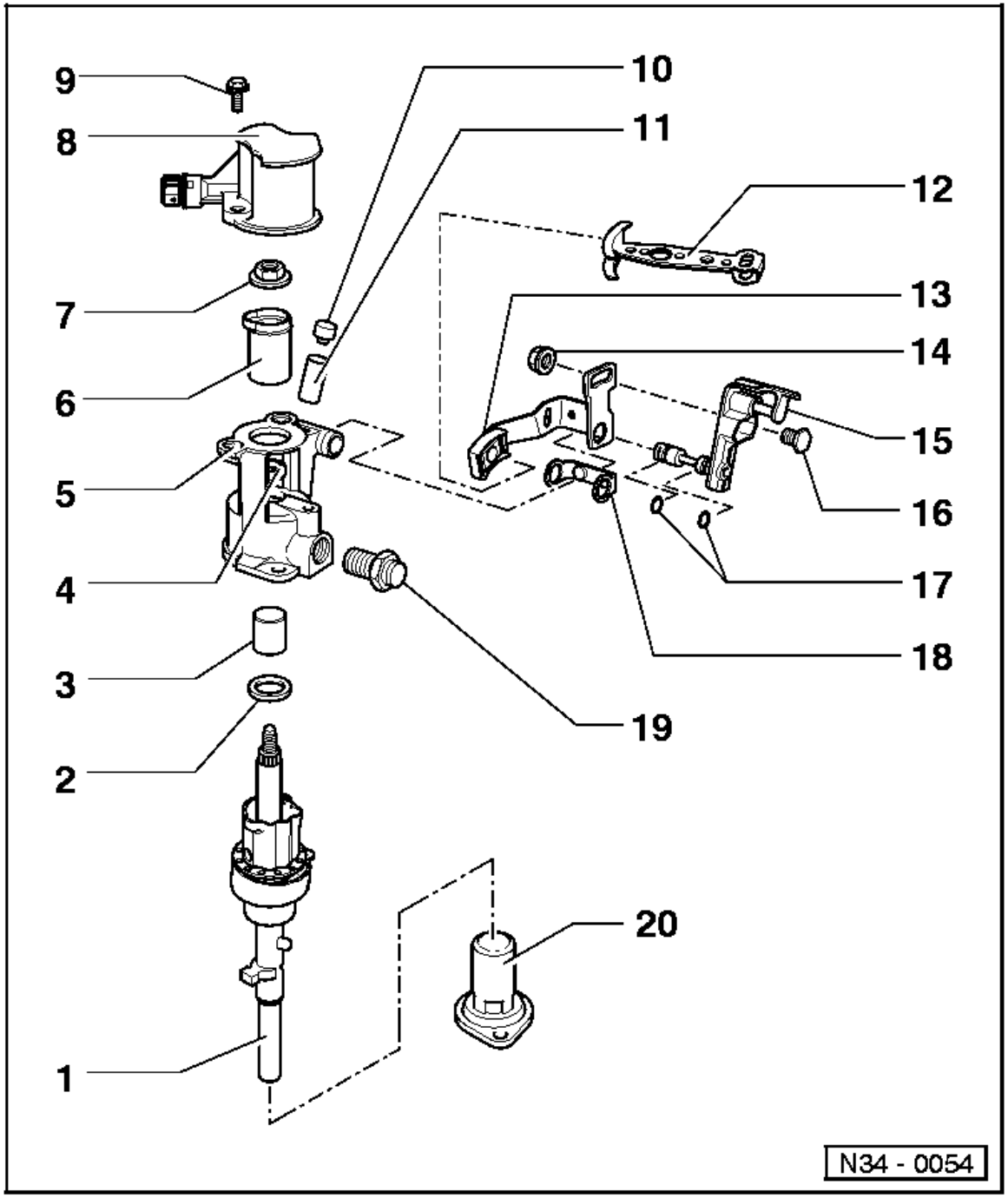

12 - Gear selector lever
- ◆ Install so that the master spline aligns with selector shaft
- ◆ Can be replaced with the selector mechanism installed
- ◆ Installation position =>Page 34-9
- ◆ Replacing => Fig. 4

13 - Relay lever
- ◆ Installation position => Page 34-9

14 - Nut, 15 Nm

15 - Actuating arm
- ◆ With axis pin for mounting relay lever
- ◆ Installation position => Page 34-9

16 - Bolt
- ◆ Press into actuating arm

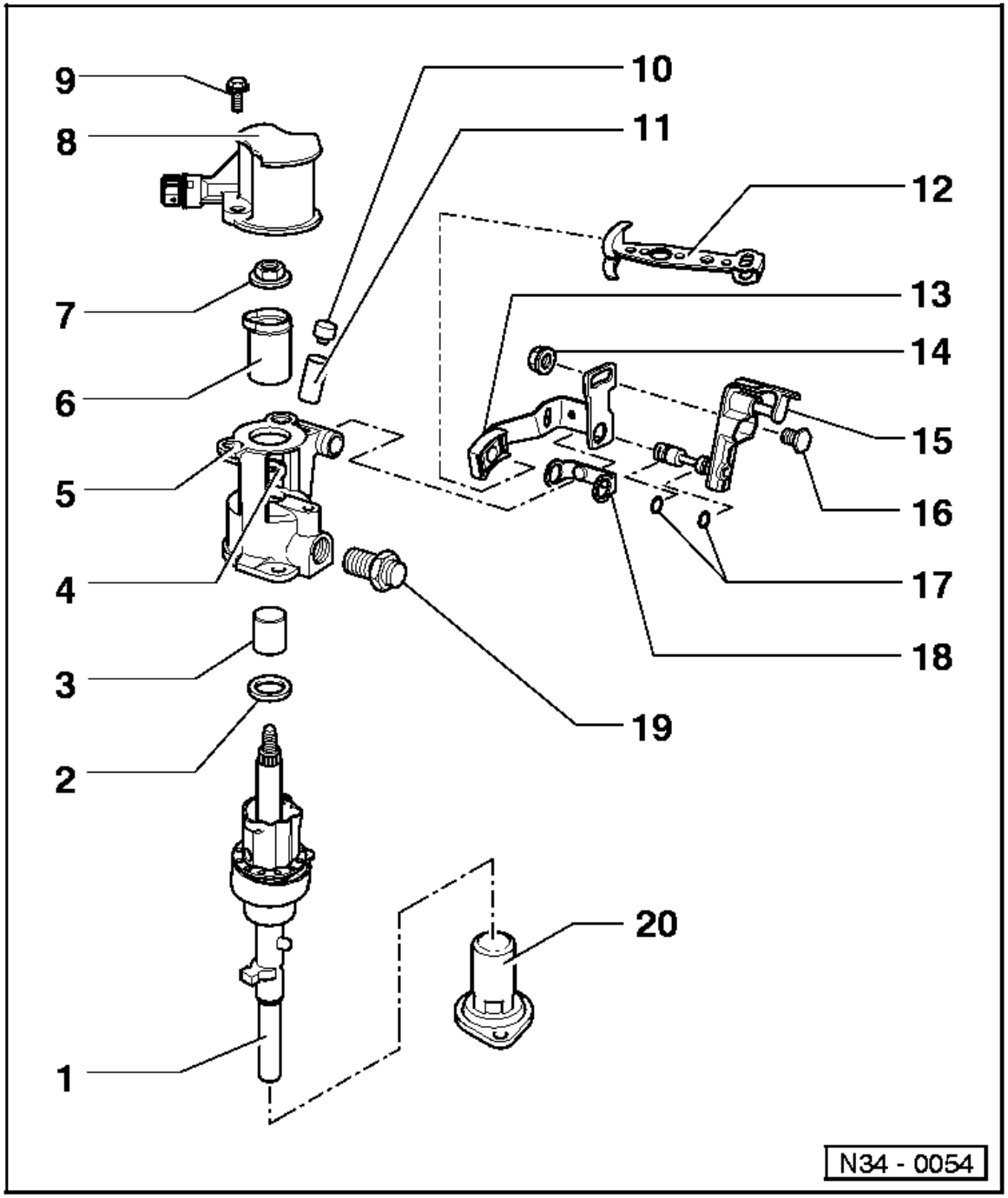

17 - O-ring
- ◆ Pull onto actuating arm axis pin

18 - Spacer
- ◆ Press into relay lever

19 - Locking bolt, 40 Nm

20 - End cover

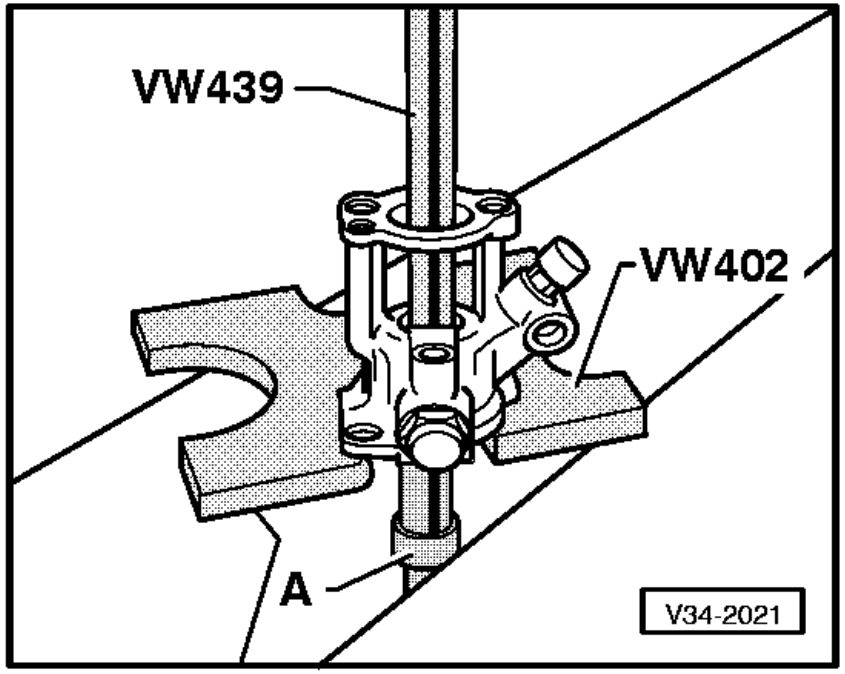

⇦ **Fig.1Removing ball sleeve from selector mechanism cover**

- Before pulling out ball sleeve, destroy plastic cage and remove balls.

A - Internal extractor, e.g. Kukko 21/3, 18.5 ... 23.5 mm

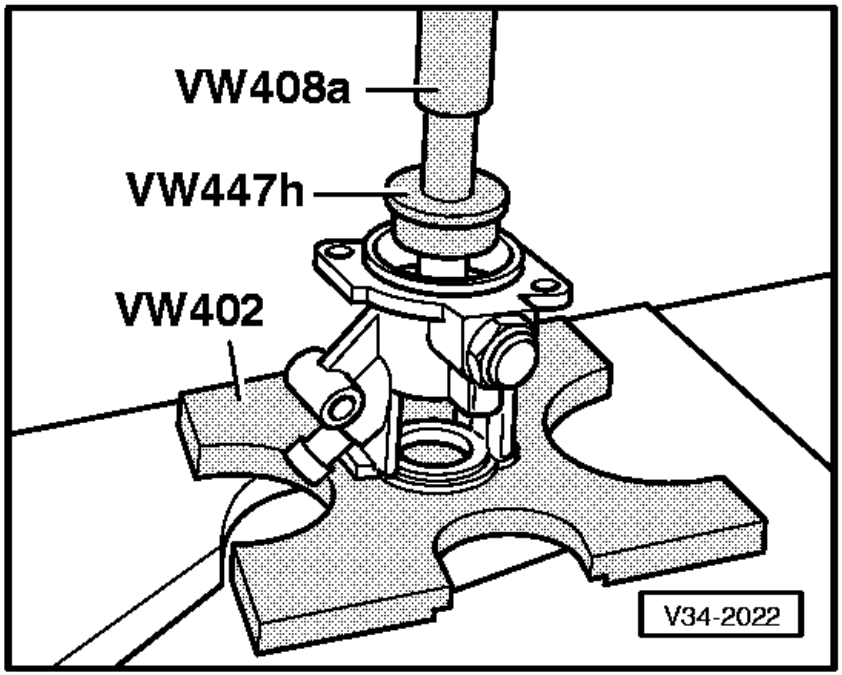

⇦ **Fig.2Knocking ball sleeve into selector mechanism cover**

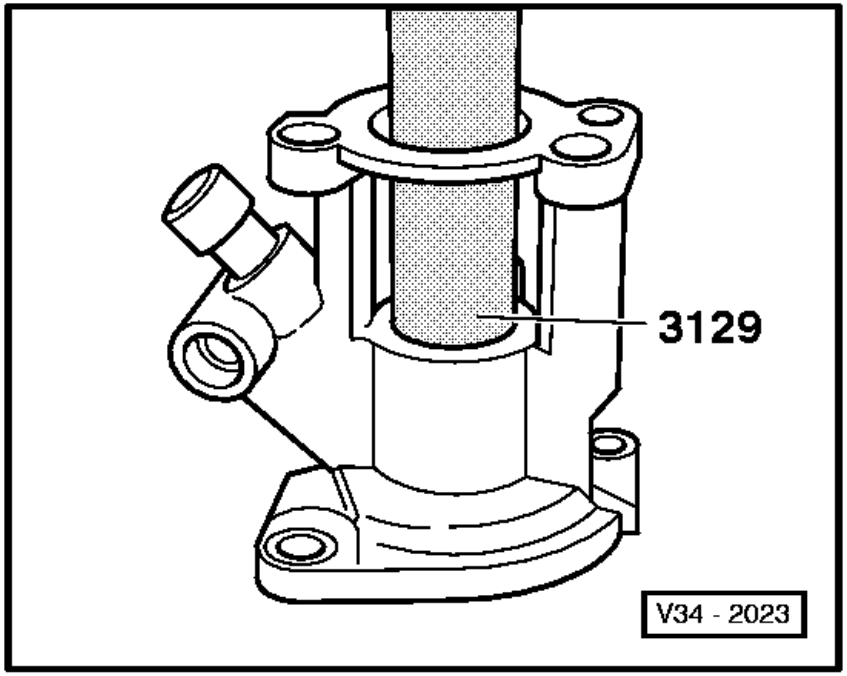

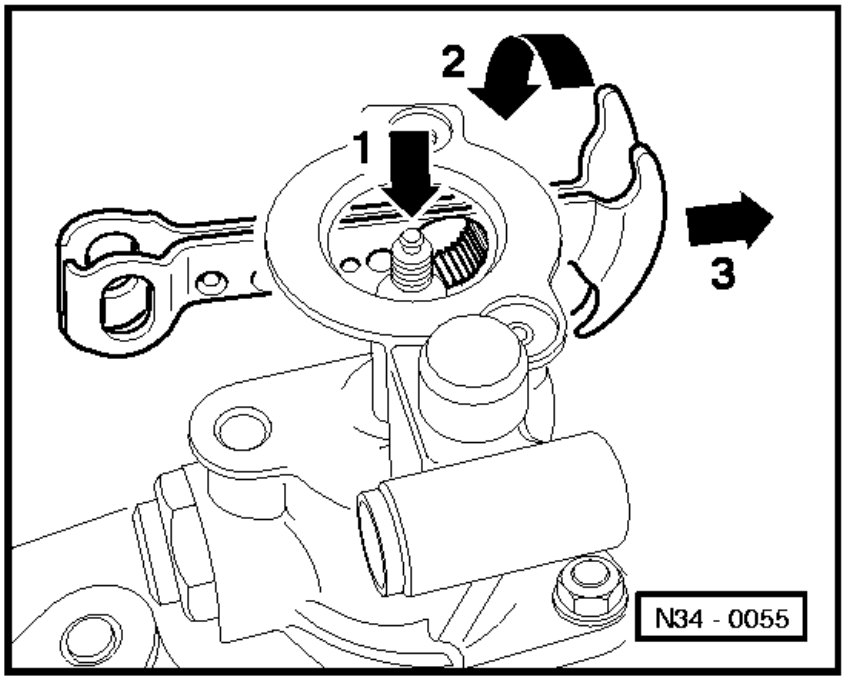

⇦ **Fig.4Replacing gear selector lever**

- Press selector shaft down (arrow -1-).

- Twist gear selector lever round (arrow direction -2-) and pull out in arrow direction -3-.