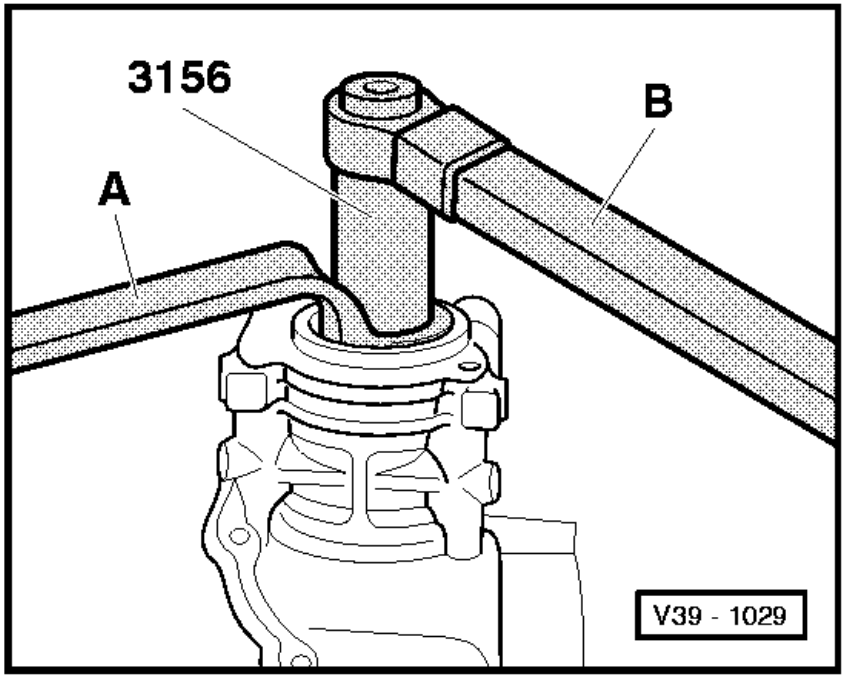

A - Ring spanner SW41

B - Torque wrench - turn clockwise to remove

Rear axle housing has been removed from bevel gear housing => Page 39-125.

- Take bevel gear with input shaft out of bevel gear housing.

- Pull seal out with VW 681.

⇦ - Remove hexagon nut for shaft bevel gear.

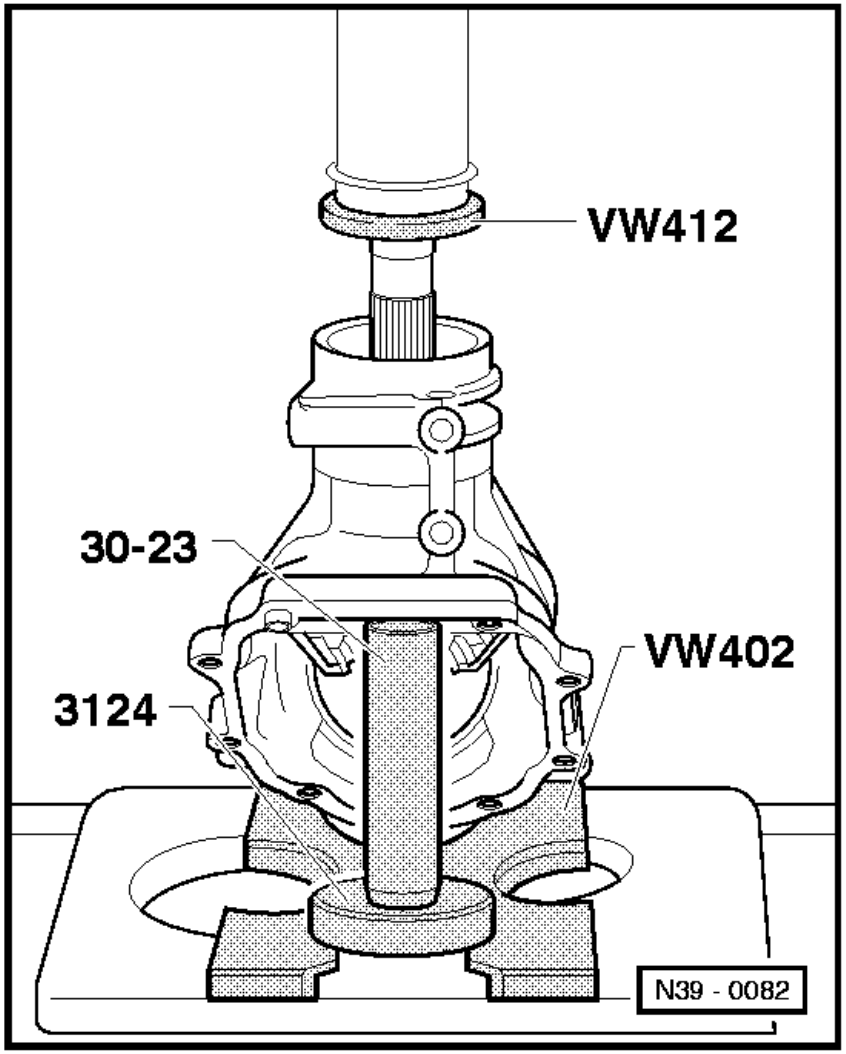

⇦ - Pressing small taper roller bearing inner race off shaft bevel gear.

Notes:

◆ Lower edge of bevel gear housing is located in pressure plate VW 402 rear cut out.

◆ After pressing out check housing joint flange for damage.

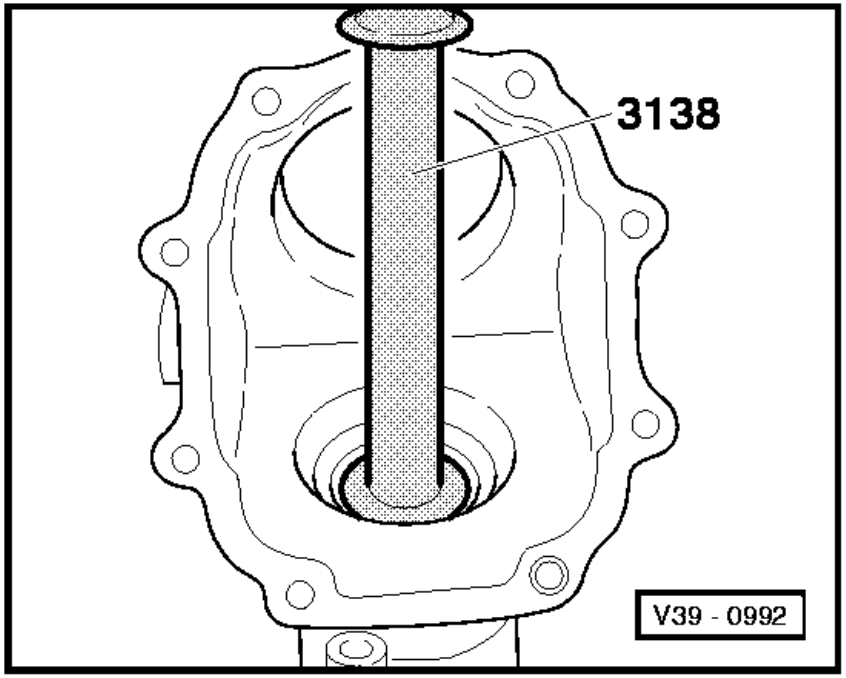

⇦ - Drive small taper roller bearing outer race out of bevel gear housing.

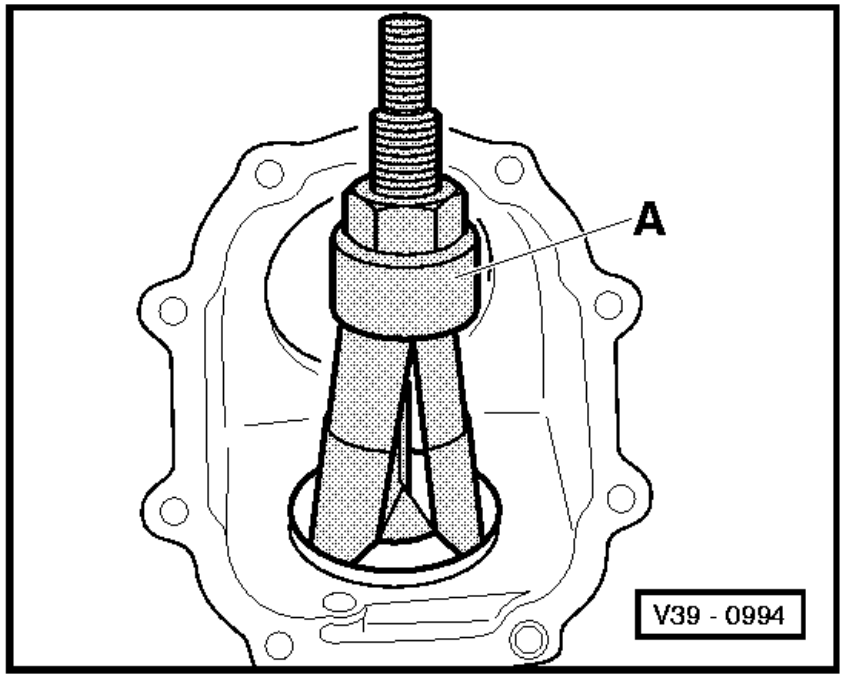

⇦ - Drive large taper roller bearing outer ring out of bevel gear housing.

A - Internal puller 56 ... 70 mm, e.g. Kukko 21/8

Previously:
Push driver 3138 through large taper roller bearing outer race hole in the direction of seal seat, then expand and drive outer race out against foot of internal puller -A-.

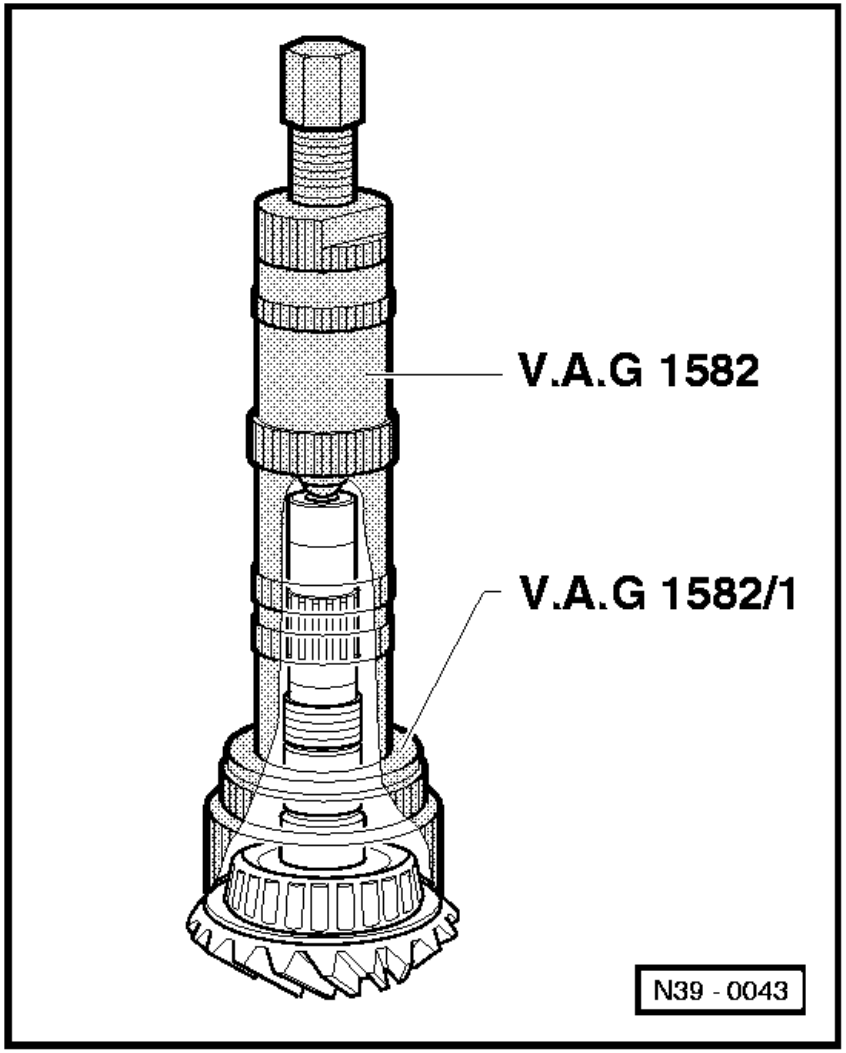

⇦ - Pulling large taper roller bearing inner race off shaft bevel gear.
For vehicles with 6 cylinder injection engine:

- First place press piece 30-11 on shaft bevel gear.

- Press large taper roller bearing inner race on shaft bevel gear with tube VW 415 a.

⇦ - Pressing shaft bevel gear large taper roller bearing outer race in bevel gear housing.

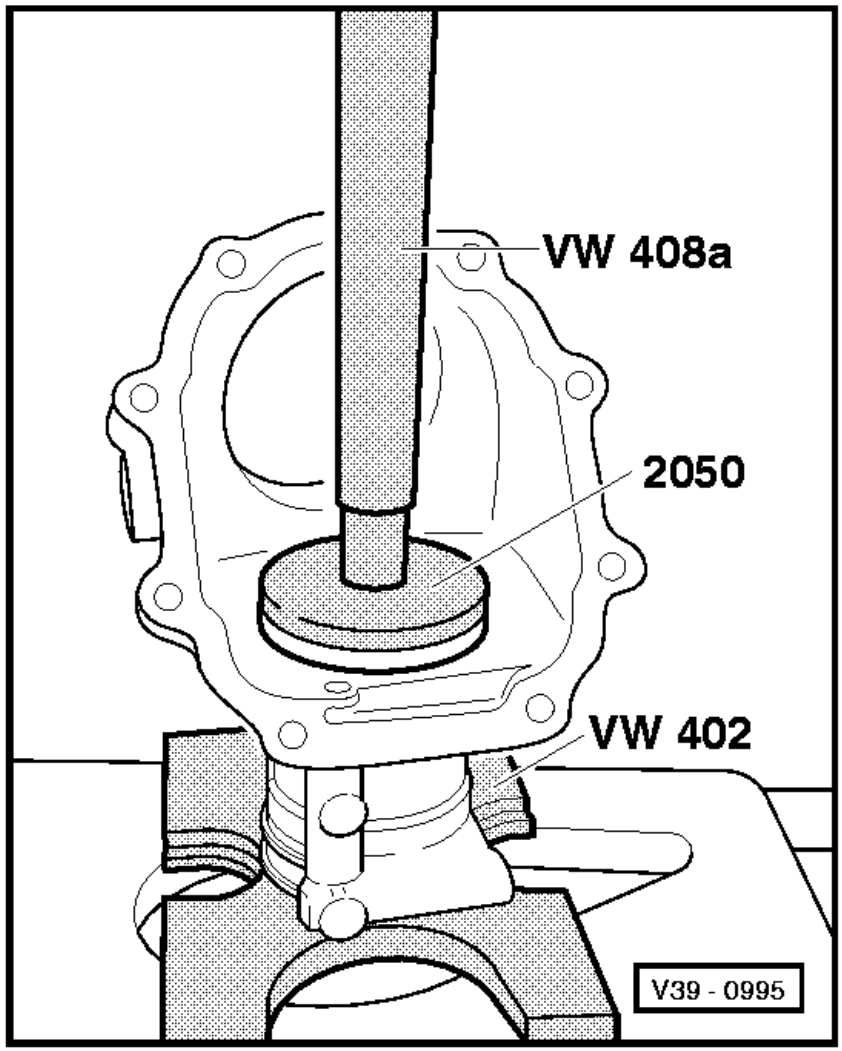

First insert shim S3.

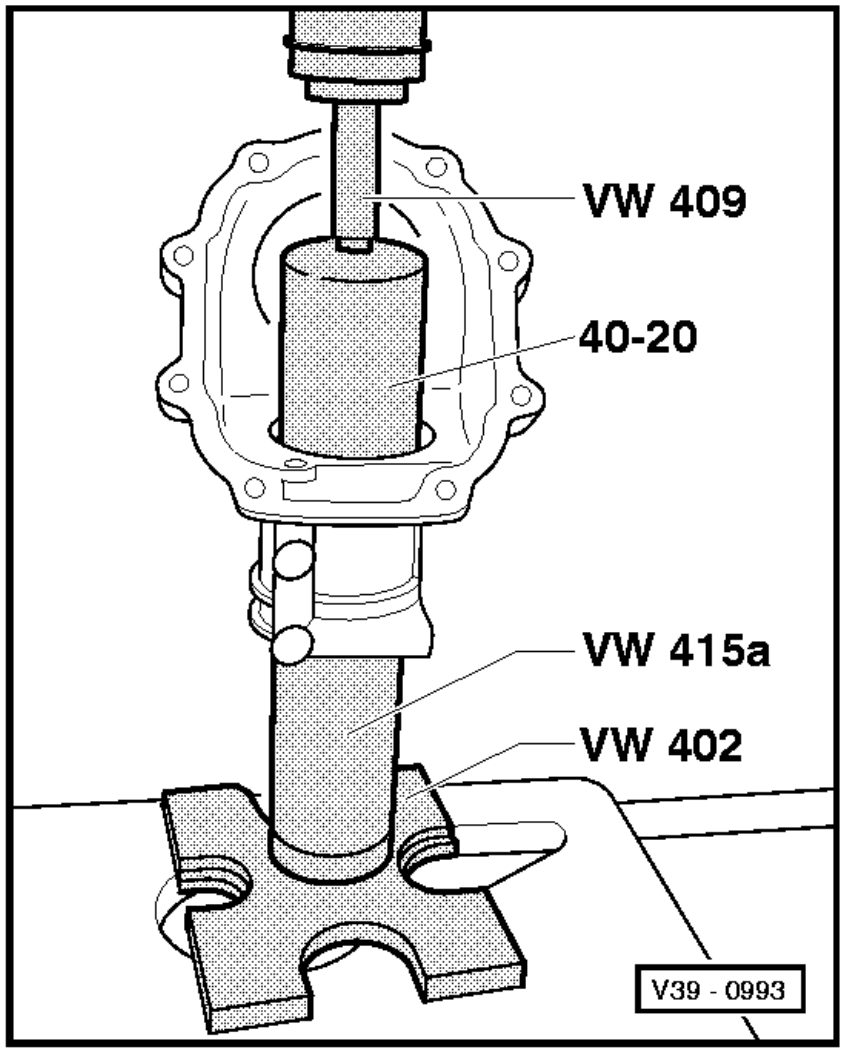

⇦ - Pressing shaft bevel gear small taper roller bearing outer race in bevel gear housing.

Notes:

- ◆ Step of tube VW 415 a to pressure plate VW 402.
- ◆ Place bearing outer race on tube VW 415a.
- ◆ Do not cant when pressing in.

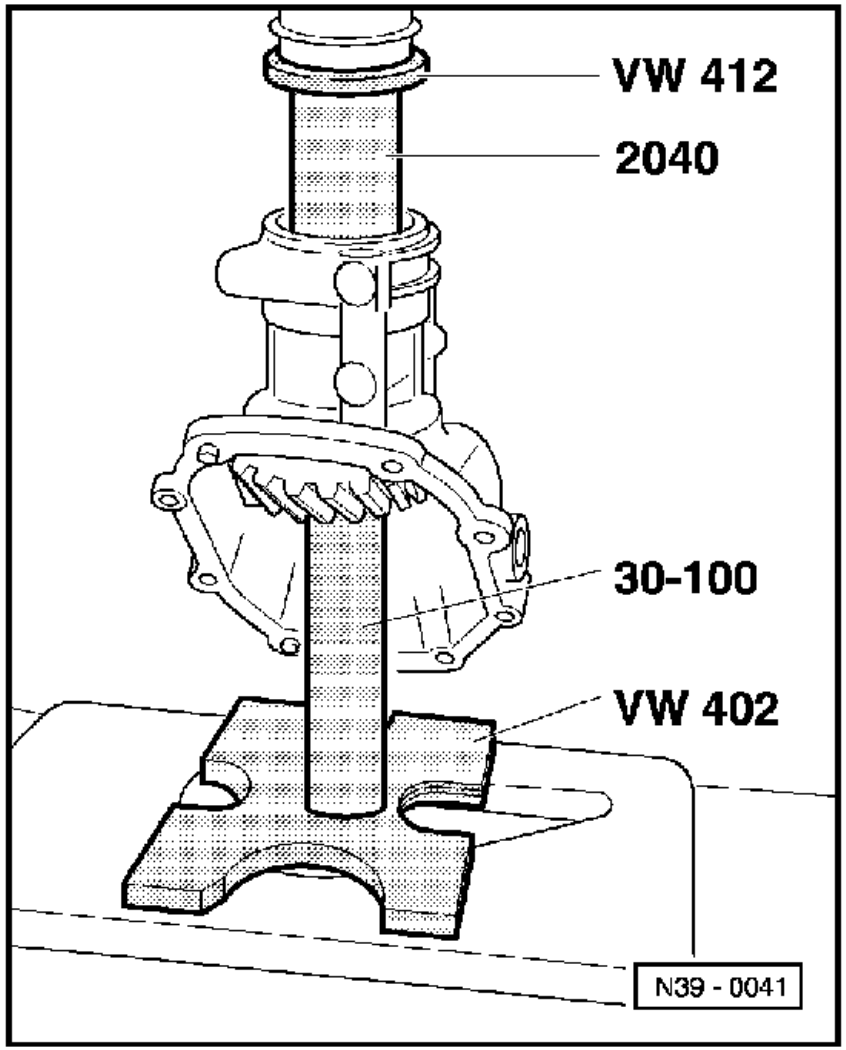

The distance sleeve must not be pressed together whilst pressing on.

- Fit shaft bevel gear in bevel gear housing.

- Place on a new distance sleeve.

⇦ - Lightly press small taper roller bearing inner race onto shaft bevel gear.

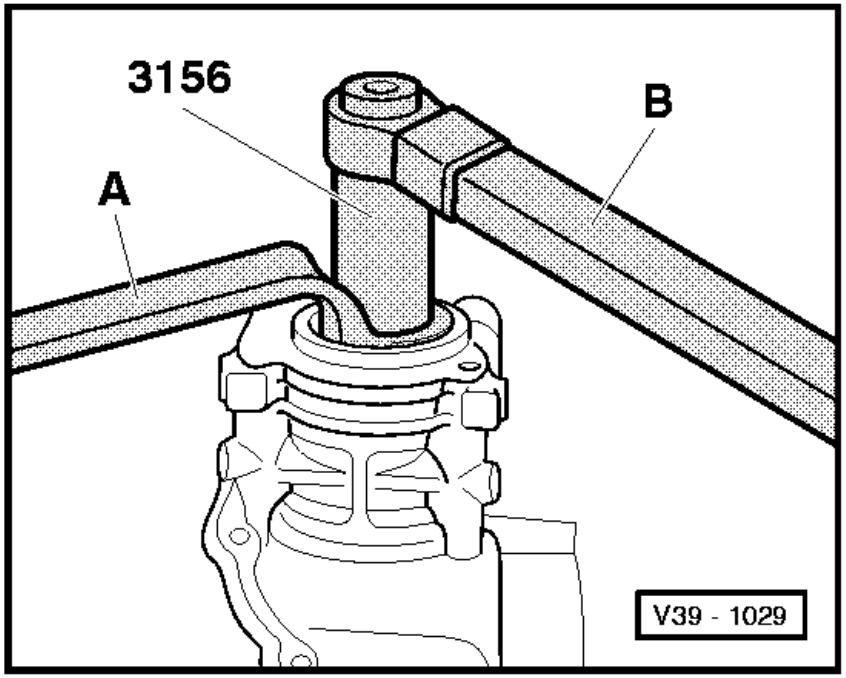

A - Ring spanner 41 mm AF

B - Torque wrench - to screw on turn anti-clockwise

- Fit hexagon nut to shaft bevel gear.

⇦ - Tighten hexagon nut to 120 Nm, then measure friction torque => Page 39-133, if necessary increase tightening torque further until the correct friction torque is set.

Note:

Increase tightening torque slowly and check friction torque at regular intervals. If the prescribed friction torque is exceeded, the spacer sleeve must be renewed and the adjustment repeated. A spacer sleeve which has been compressed too much cannot be reused.

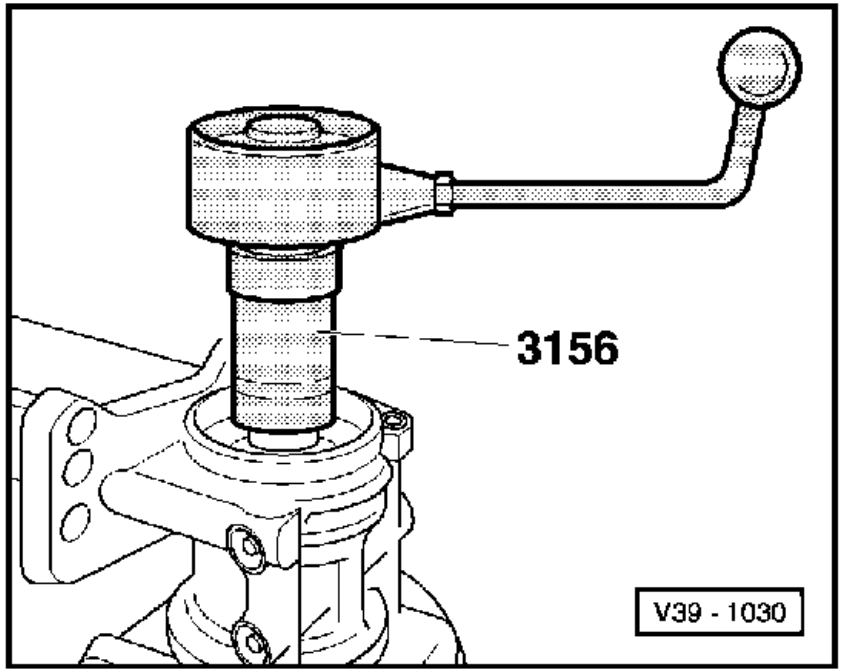

With torque gauge, 0 ... 600 Ncm, commercially available

Set friction torque as follows:

new bearings	used bearings [1])
200 ... 250 Ncm	30 ... 50 Ncm

[1])run at least 50 km (30 miles)

⇦ - Measure friction torque.

- Drive new seal in onto stop with sleeve 3158. When doing this do not cant seal.