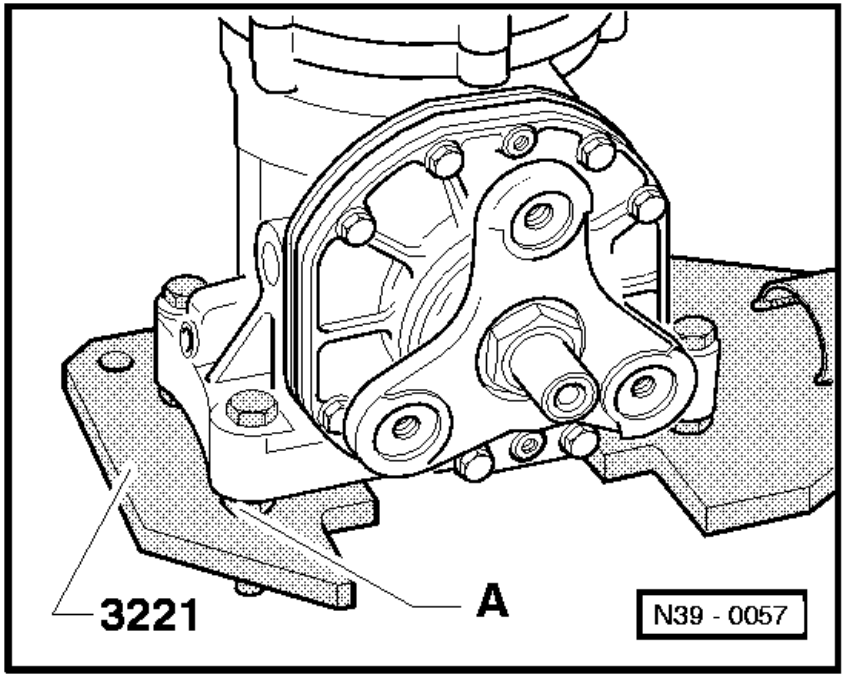

A - Nut M12 x 10

Dismantling bevel box

- Drain gearbox oil.

⇦ - Secure bevel box in gearbox support.

Note:

If the output flange hexagon nut is not to be loosened, then the bevel box can be held in gearbox support 2004 for dismantling and assembling.

⇦ - Remove output flange hexagon nut.

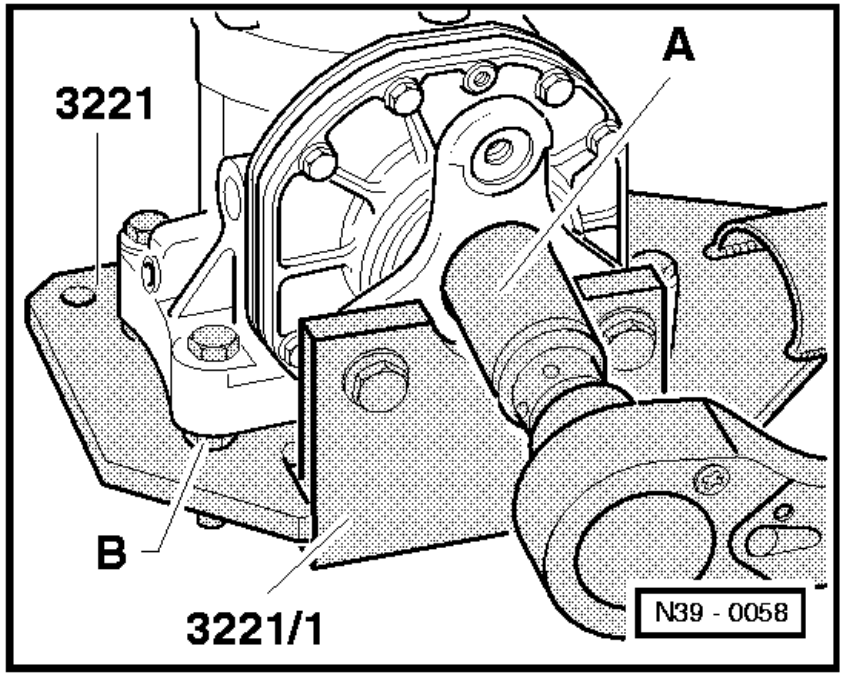

A - Socket for 3/4" drive

B - Nut M12 x 10

- Take off output flange.

- Lever out seal using a screwdriver.

- Take out shaft bevel gear small taper roller bearing inner race.

⇦ - Remove pinion housing.

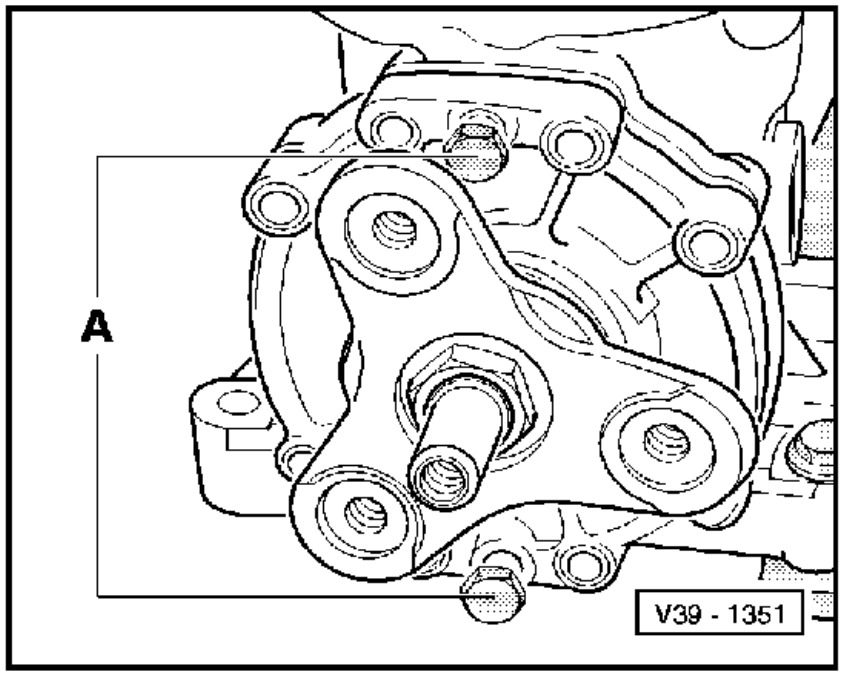

Bolt hexagon bolts -A- in evenly so that the pinion housing is not canted.

Note:

Pinion housing can also be removed and installed with the output flange fitted.

- Take off shim S3.

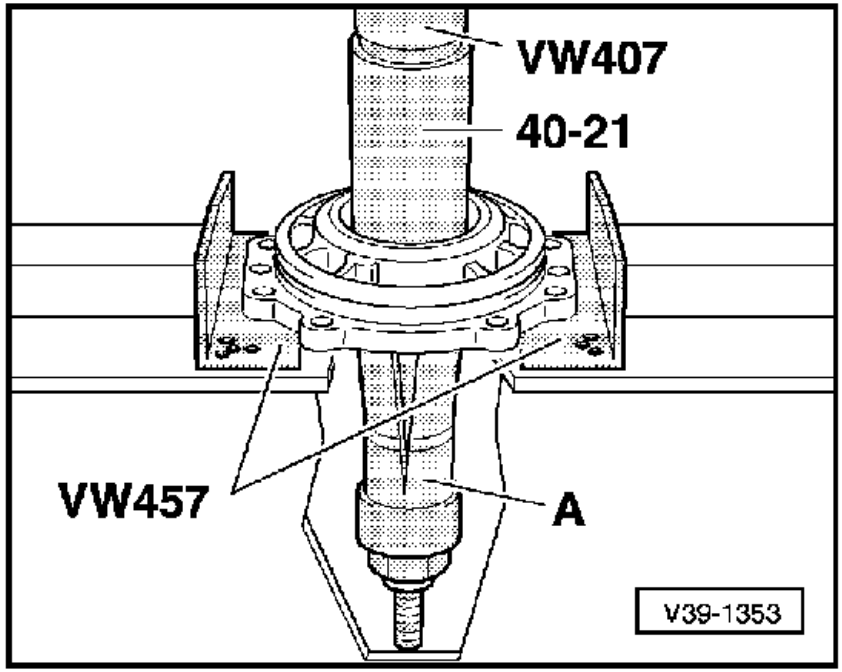

⇦ - Press small taper roller bearing outer race out of pinion housing.
B - Internal puller 46...58 mm, e.g. Kukko 21/7

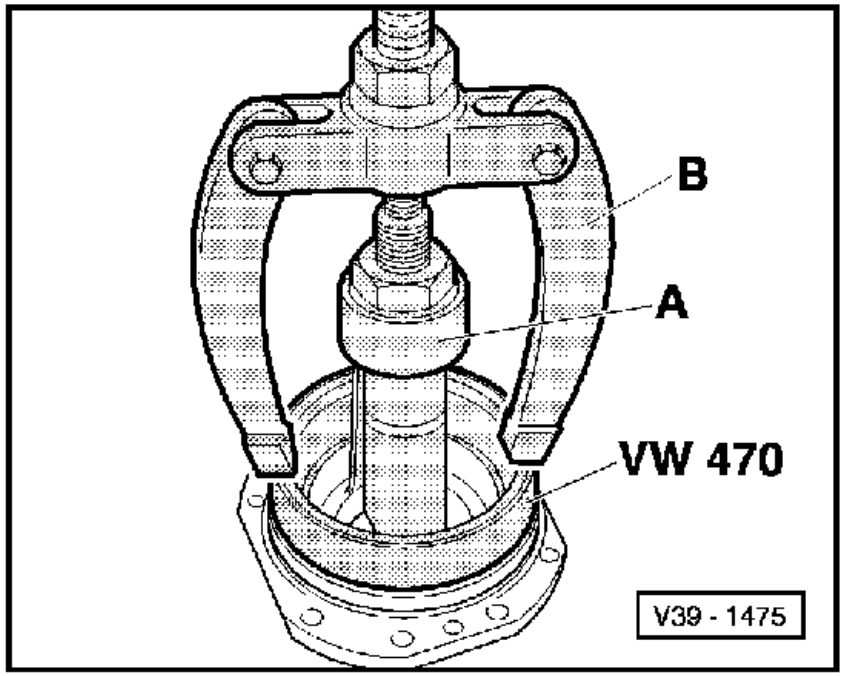

⇦ - Pulling large taper roller bearing outer race out of pinion housing.
A - Internal puller 46 ... 58 mm, e.g. Kukko 21/7

B - Counter support, e.g. Kukko 22/2

- Take output bevel gear out with shim S4.

Gearbox for vehicles with 6 cylinder injection engine:

- Take off spacer ring.

⇦ - Pulling large taper roller bearing inner race off shaft bevel gear.

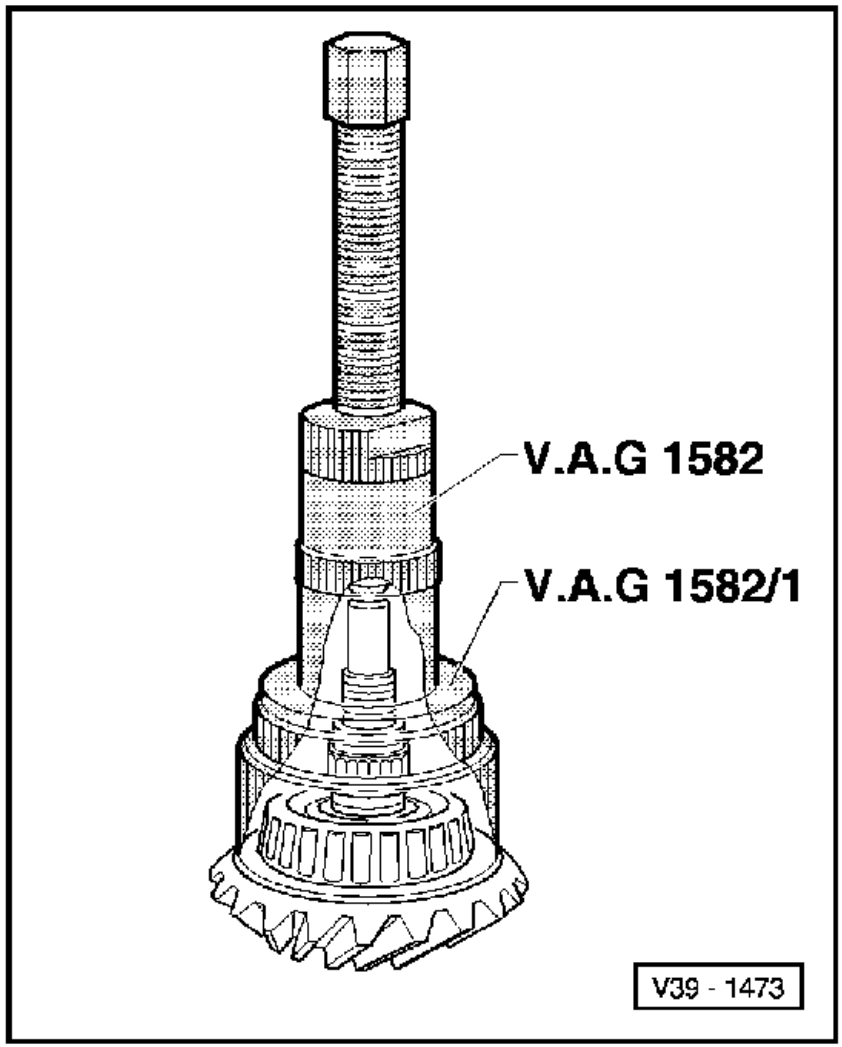

Fit extractor and tension well behind the bearing rollers. Then turn bearing and retension extractor.

⇦ - Remove cover.

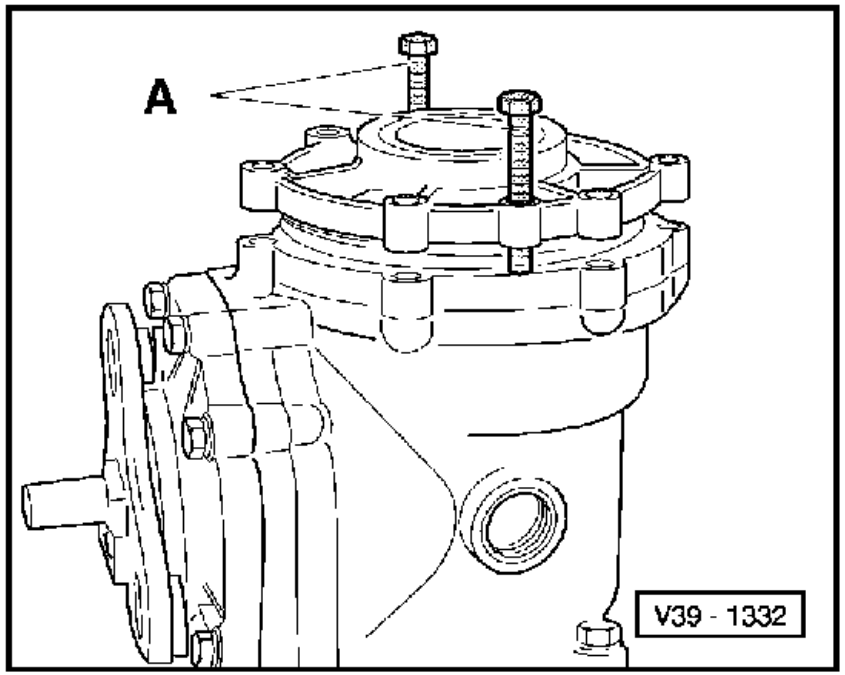

Bolt hexagon bolts -A- in evenly so that the cover does not cant.

Note:

Lever out seal first if necessary.

⇦ - Pressing large taper roller bearing outer race out of cover.
A - Internal puller 56...70 mm, e.g. Kukko 21/8

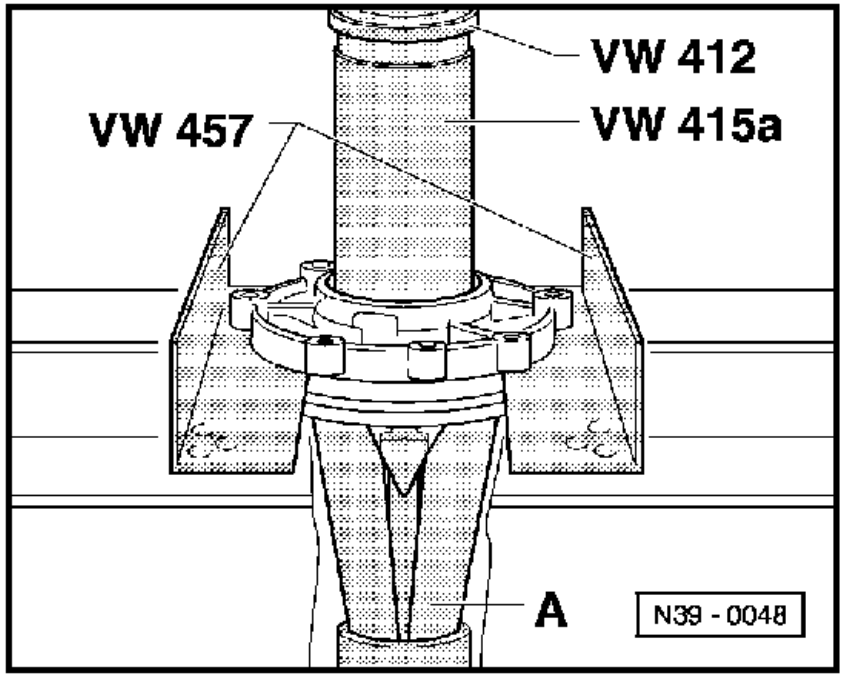

- Remove bevel gear with input shaft.

⇦ - Pulling large taper roller bearing inner race off bevel gear.

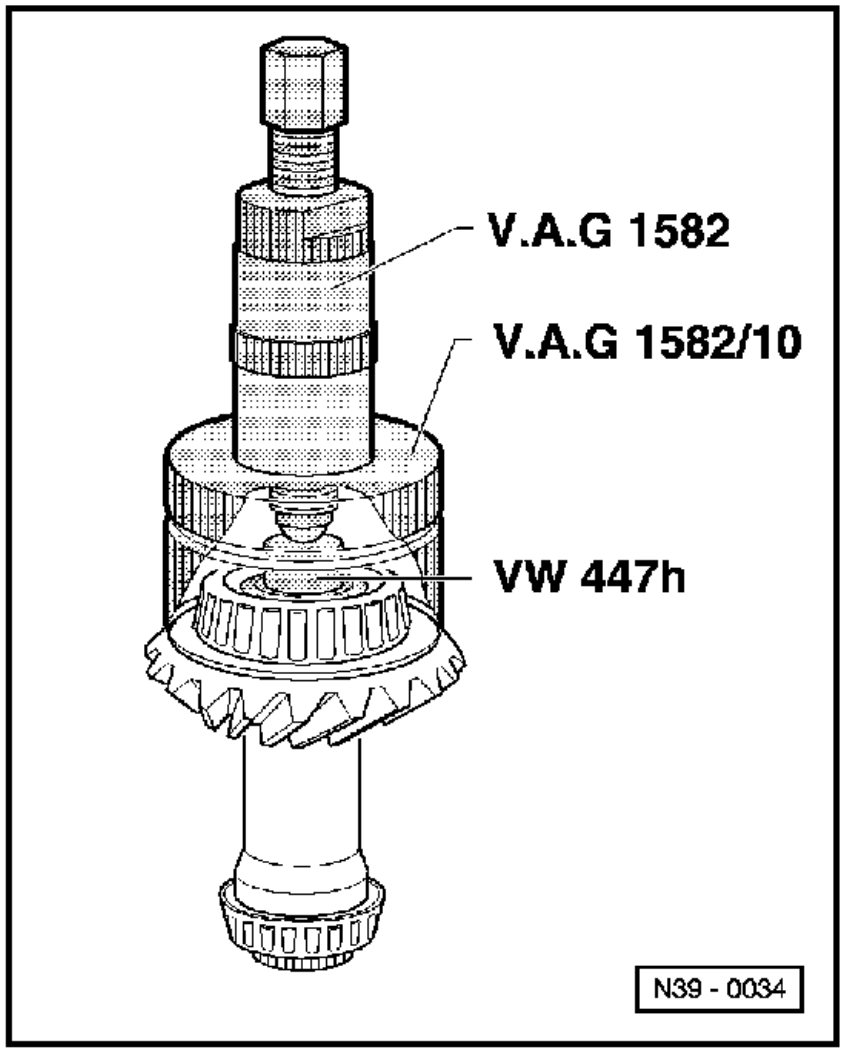

Fit extractor and tension well behind the bearing rollers. Then turn bearing and retension extractor.

Note:

The large inner race can also be pressed off using separating device 22...115 mm, e.g. Kukko 17/2 and press tool VW 407.

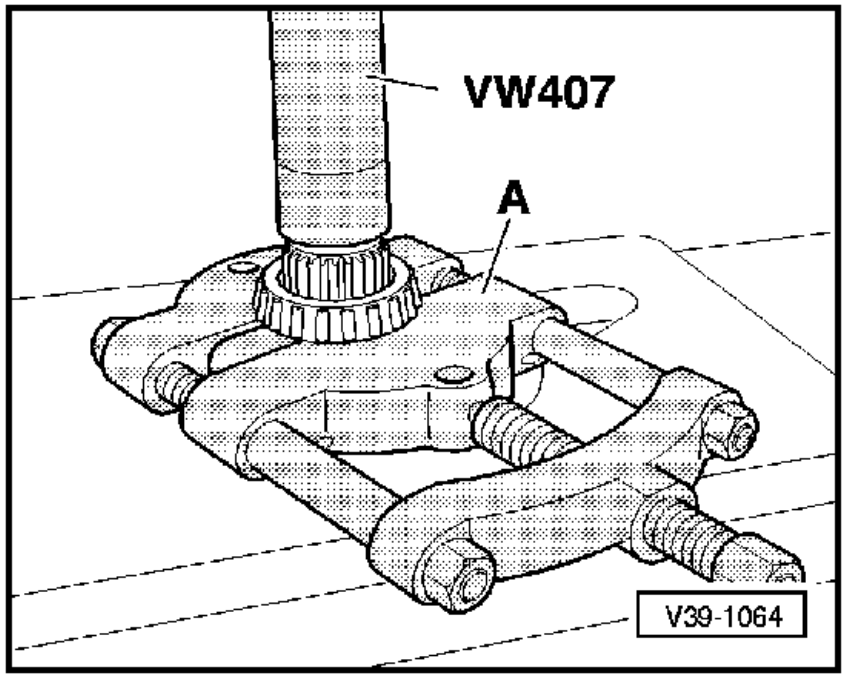

⇦ - Pressing small taper roller bearing inner race off input shaft
A - Separating device 22 ... 115 mm, e.g. Kukko 17/2

Note:

Inner race can also be pressed off using taper roller bearing puller V.A.G 1582 and extractor V.A.G 1582/3 but first place press piece 40-105 on input shaft.

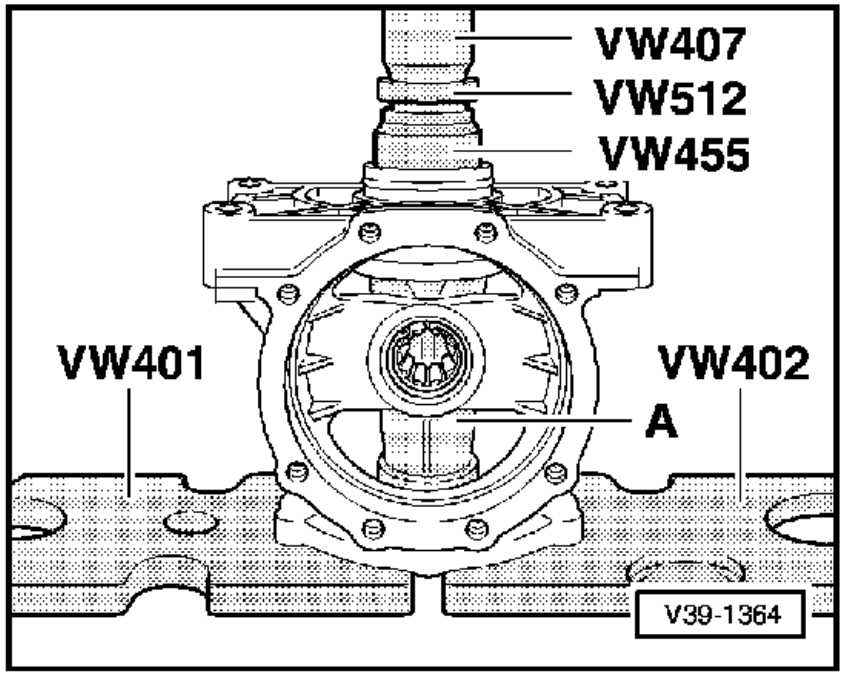

⇦ - Pressing small taper roller bearing outer race out of final drive housing.
A - Internal extractor 45 ... 58 mm, e.g. Kukko 21/7

- Remove circlip for roller bearing from final drive housing.

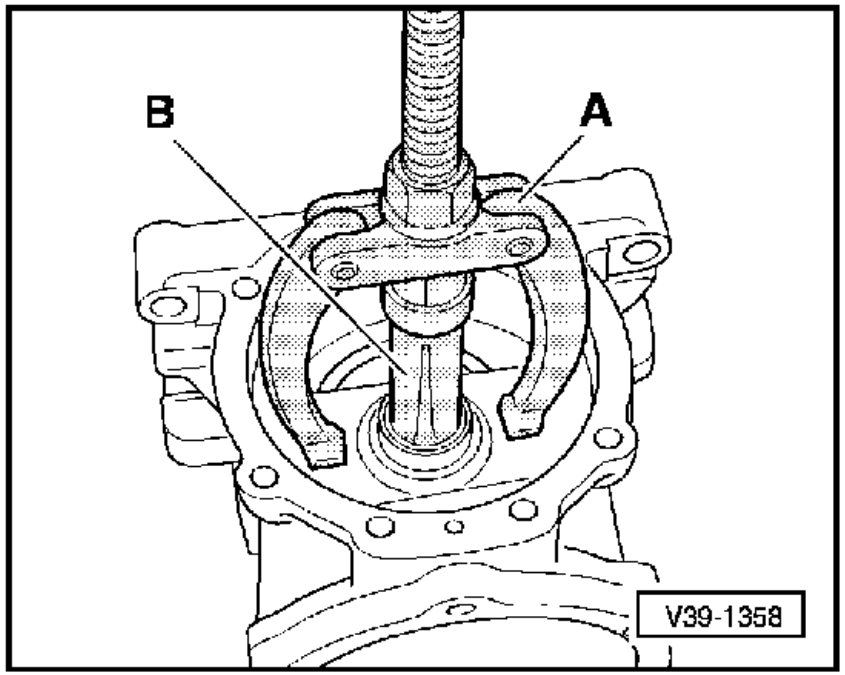

⇦ - Pulling roller bearing out of final drive housing.
A - Counter support, e.g. Kukko 22/1

B - Internal puller 22 ... 28 mm, e.g. Kukko 21/4

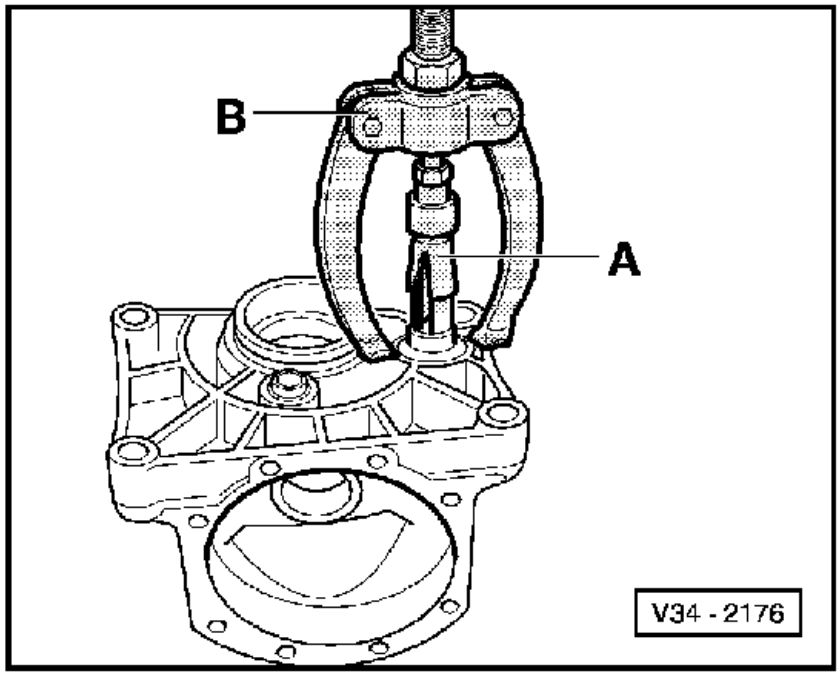

⇦ - Pulling sleeves for oil supply out.
A - Internal extractor 8 ... 12 mm, e.g. Kukko 21/02

B - Counter support, e.g. Kukko 22/1

Pulling out is also possible when bevel box is not dismantled.

Assembling bevel box

See adjustment overview => Page 39-54.

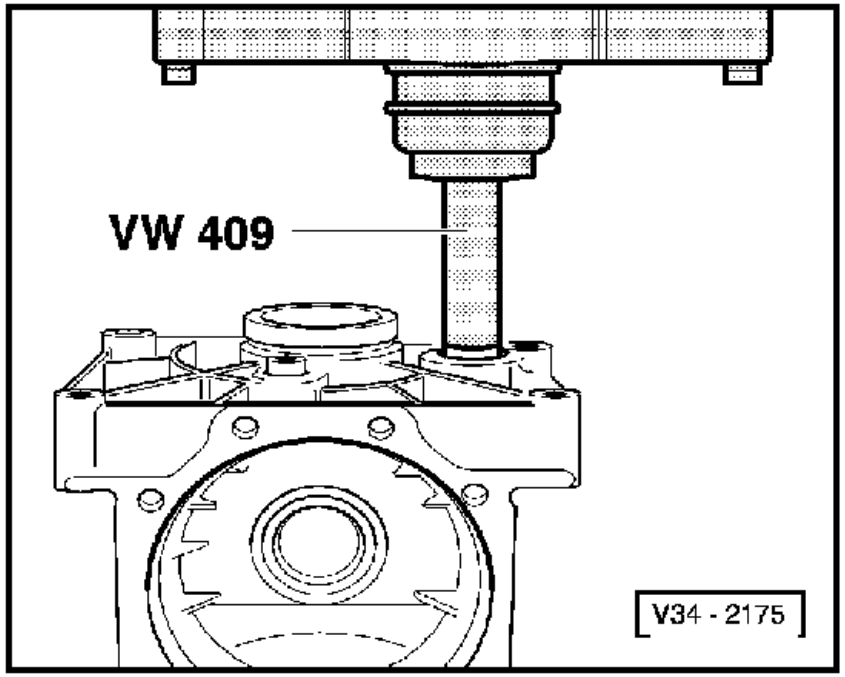

⇦ - Pressing sleeves for oil supply in.

Installation position: Side with inscription towards press tool.

Carefully press in onto stop.

The sleeves can be pressed in when the bevel box is not dismantled using press tool VW 409.

⇦ - Pressing roller bearing in final drive housing.

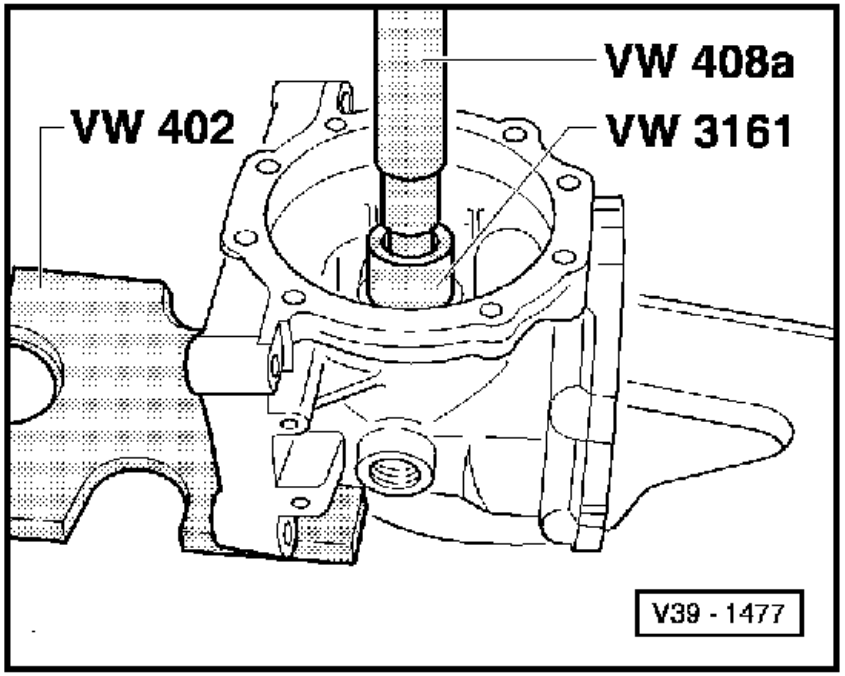

The inscription points towards press tool.

Carefully press in onto stop.

- Fit new circlip in final drive housing.

⇦ - Pressing small taper roller bearing outer race into final drive housing.

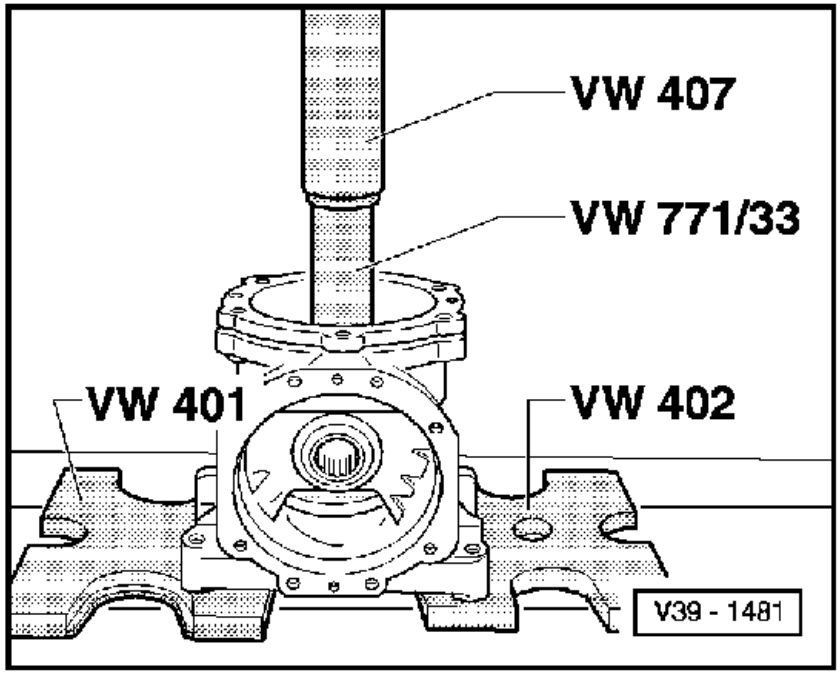

Note:

Interrupt pressing operation as soon as possible to allow the press tool VW 711/33 to be seated over the complete circumference of the outer race.

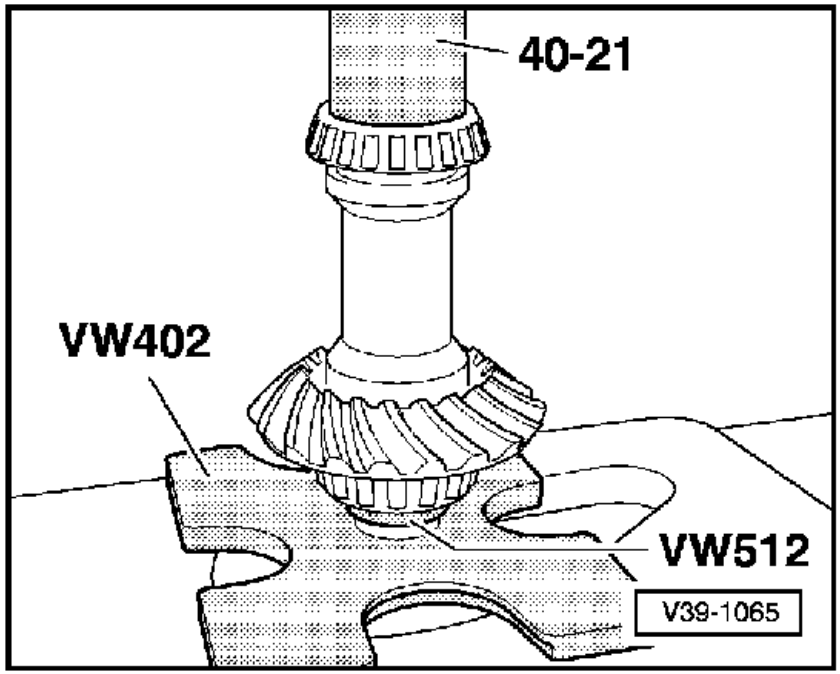

⇦ - Pressing small taper roller bearing inner race onto input shaft.

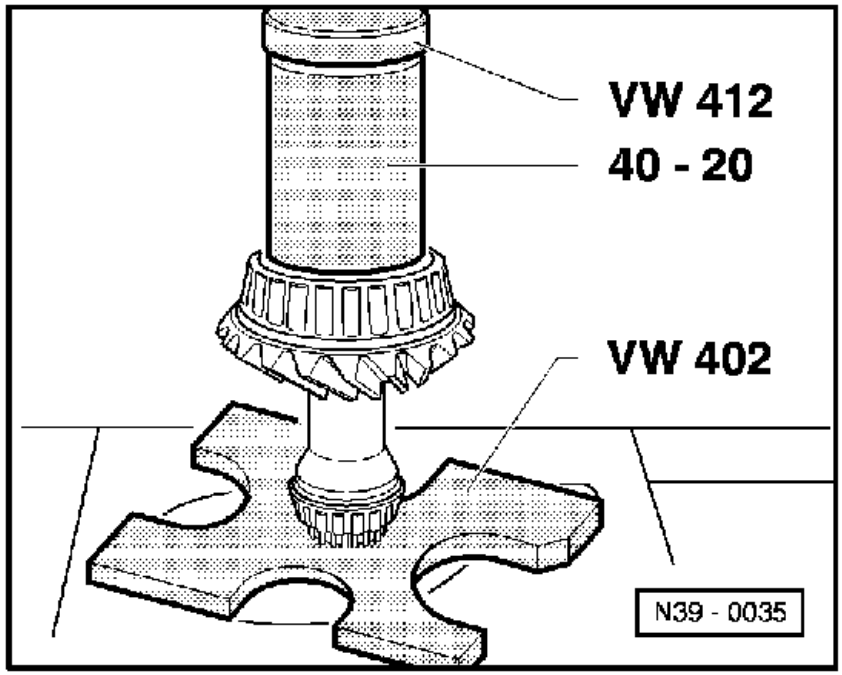

⇦ - Pressing large taper roller bearing inner race onto bevel gear.

- Insert bevel gear with input shaft into final drive housing.

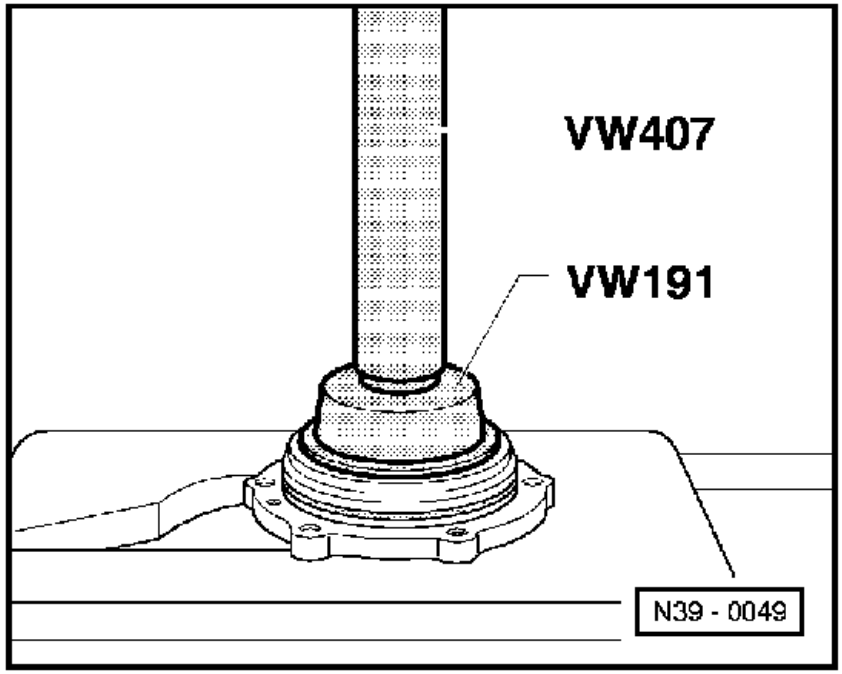

Fit shim S1 before pressing in.

⇦ - Pressing large taper roller bearing outer race into cover.

- Install cover with new O-ring.

Note:

Do not cant during installation, tighten securing bolts in a diagonal sequence and in stages.

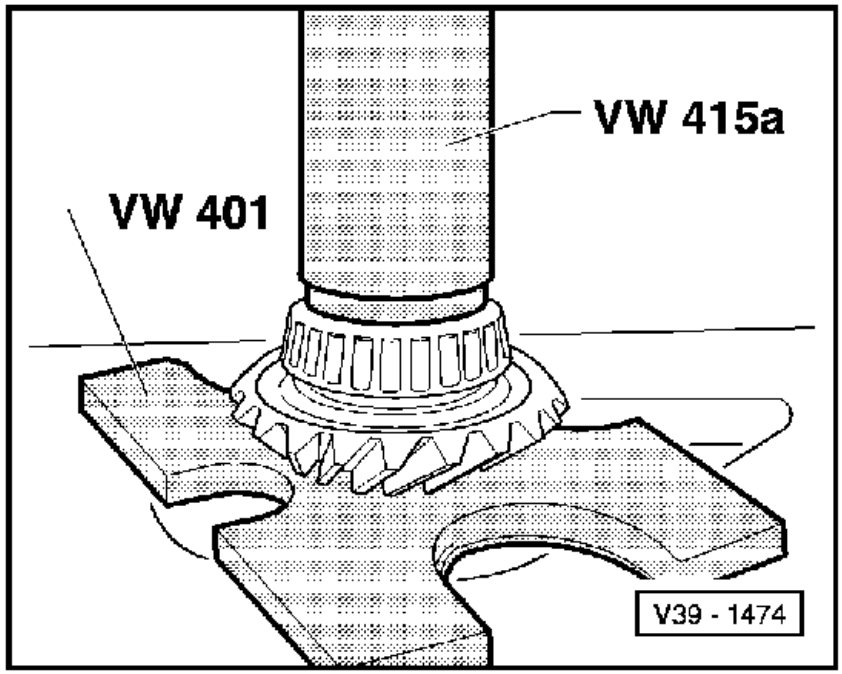

⇦ - Pressing large taper roller bearing inner race onto shaft bevel gear.

- Insert shaft bevel gear with shim S4 into final drive housing.

Gearbox for vehicles with 6 cylinder injection engine:

- Before fitting shim S4 fit spacer ring with chamfer pointing towards shaft bevel gear.

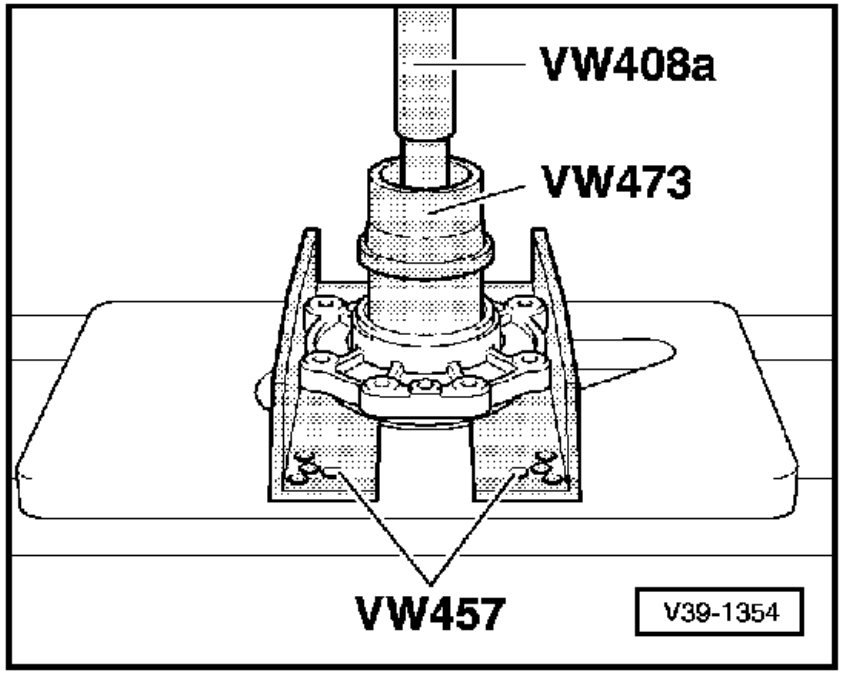

⇦ - Pressing small taper roller bearing outer race into pinion housing.

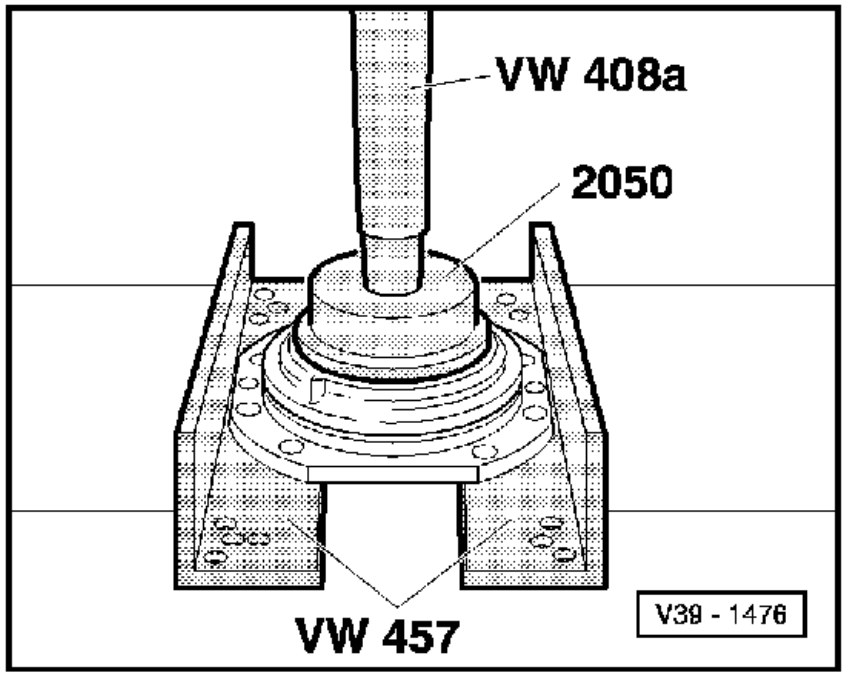

⇦ - Pressing large taper roller bearing outer race into pinion housing.

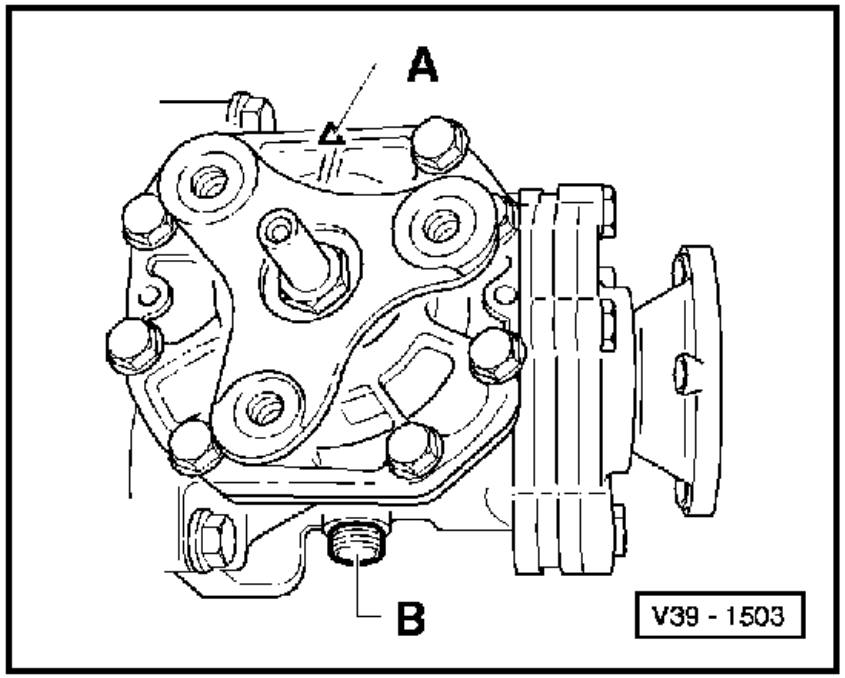

⇦ - Fit shim S3 to final drive housing.

- Install pinion housing with new O-ring.

Notes:

◆ The arrow -A- cast in the housing is opposite the oil drain plug -B-.

◆ Do not cant when installing, tighten securing screws in a diagonal sequence and in stages.

◆ Pinion housing can be removed and installed with output flange fitted.

- Fit small taper roller bearing inner race for shaft bevel gear.

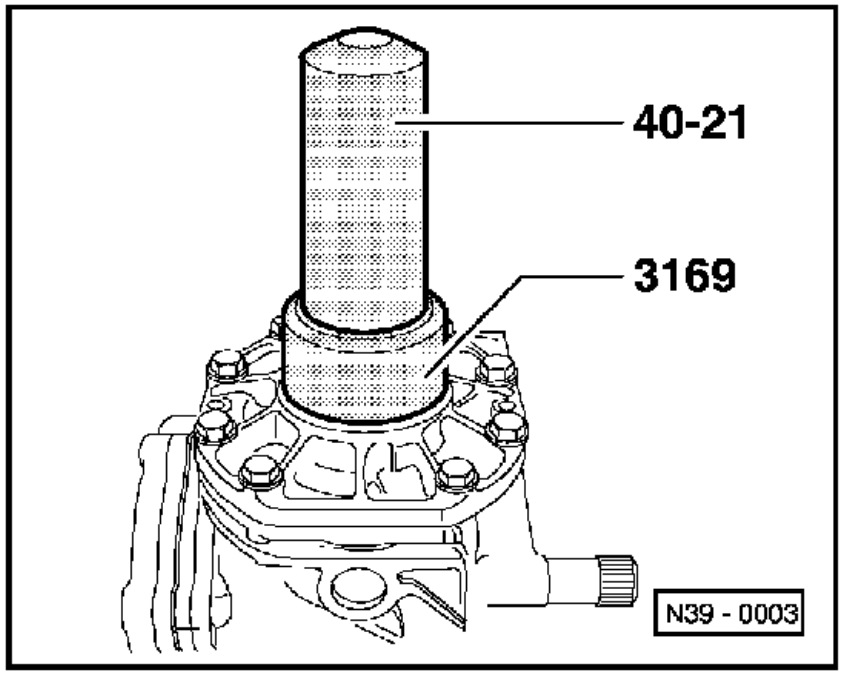

⇦ - Drive new oil seal for output flange in flush.

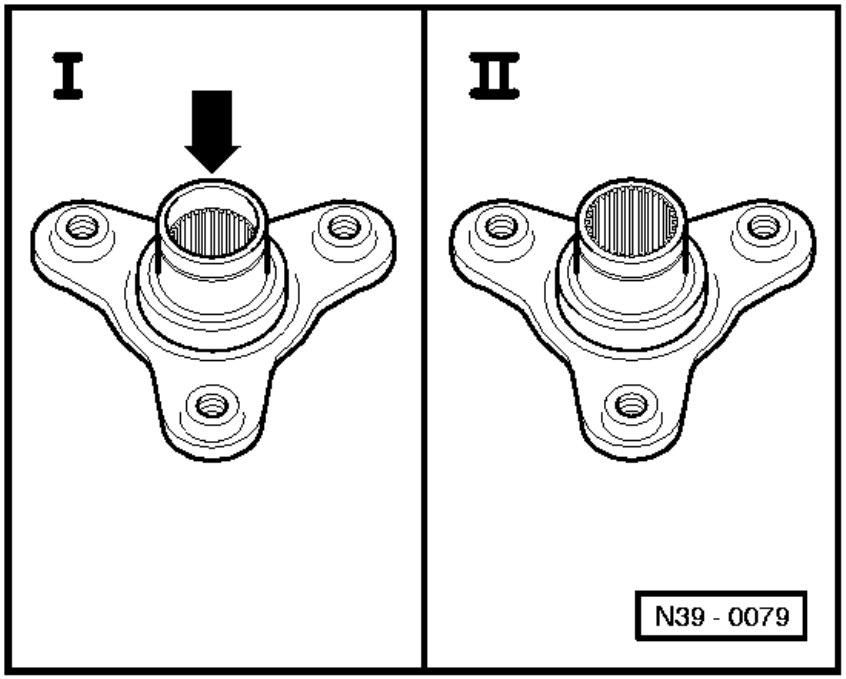

- Install output shaft.

Note:

⇦ *Identifying output flange:*

I - Gearbox for vehicles with 6-Cyl. injection engine: Splines recessed (arrow).

II - Gearbox for vehicles with 4-Cyl. engine:

Splines over full length.

⇦ - Fit and tighten output flange hexagon nut to torque setting.

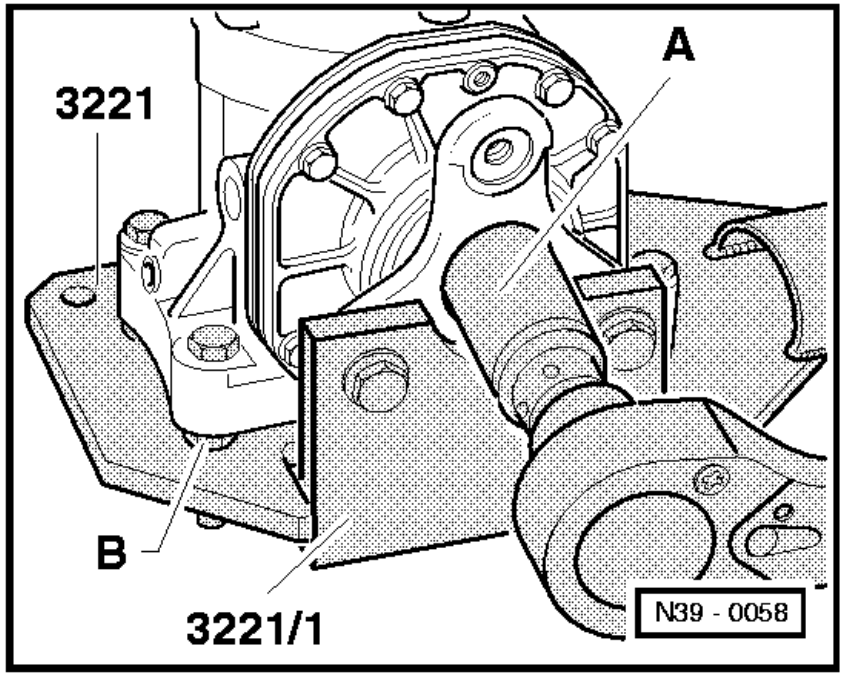

A - Socket for 3/4" drive

B - Nut M12 x 10

Nut and shaft bevel gear threads must be clean.

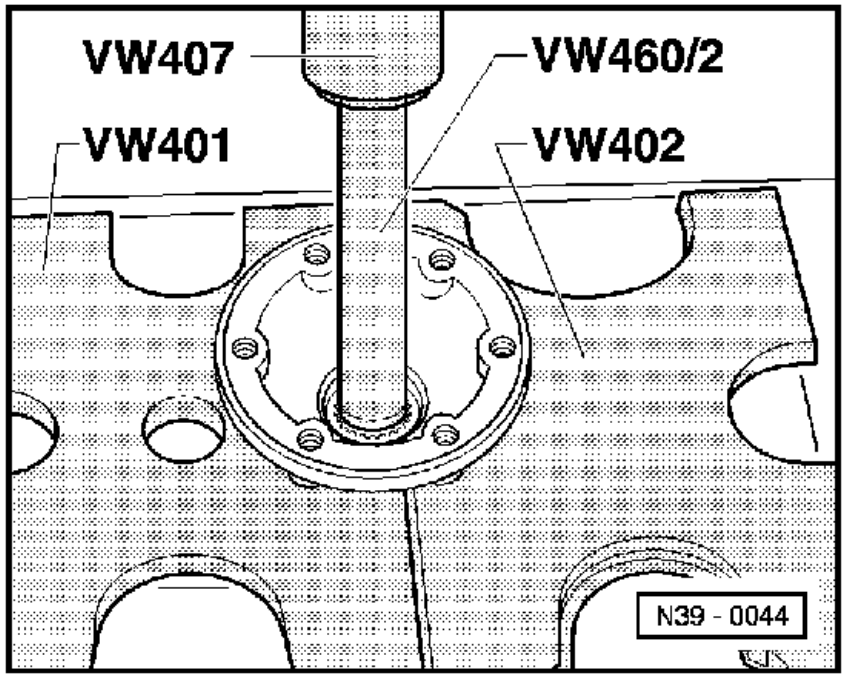

- Drive new seal for drive flange/output shaft onto stop => Page 39-4.

⇦ - Pressing drive flange off output shaft.

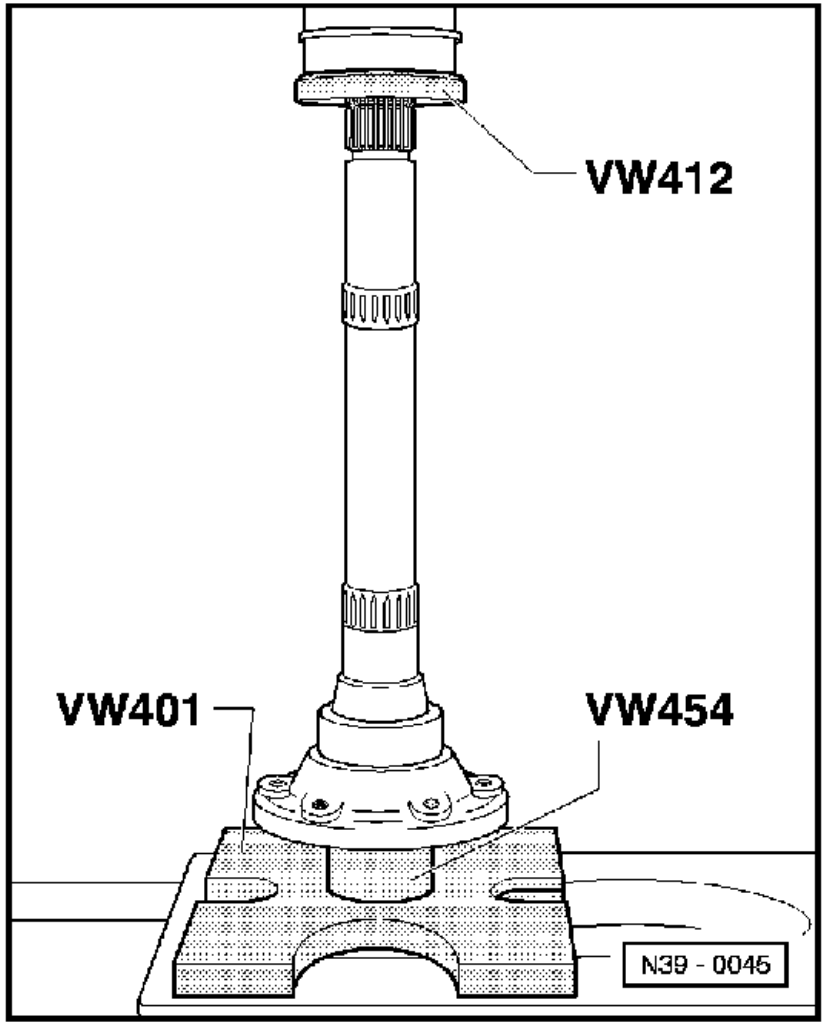

⇦ - Pressing drive flange onto output shaft.