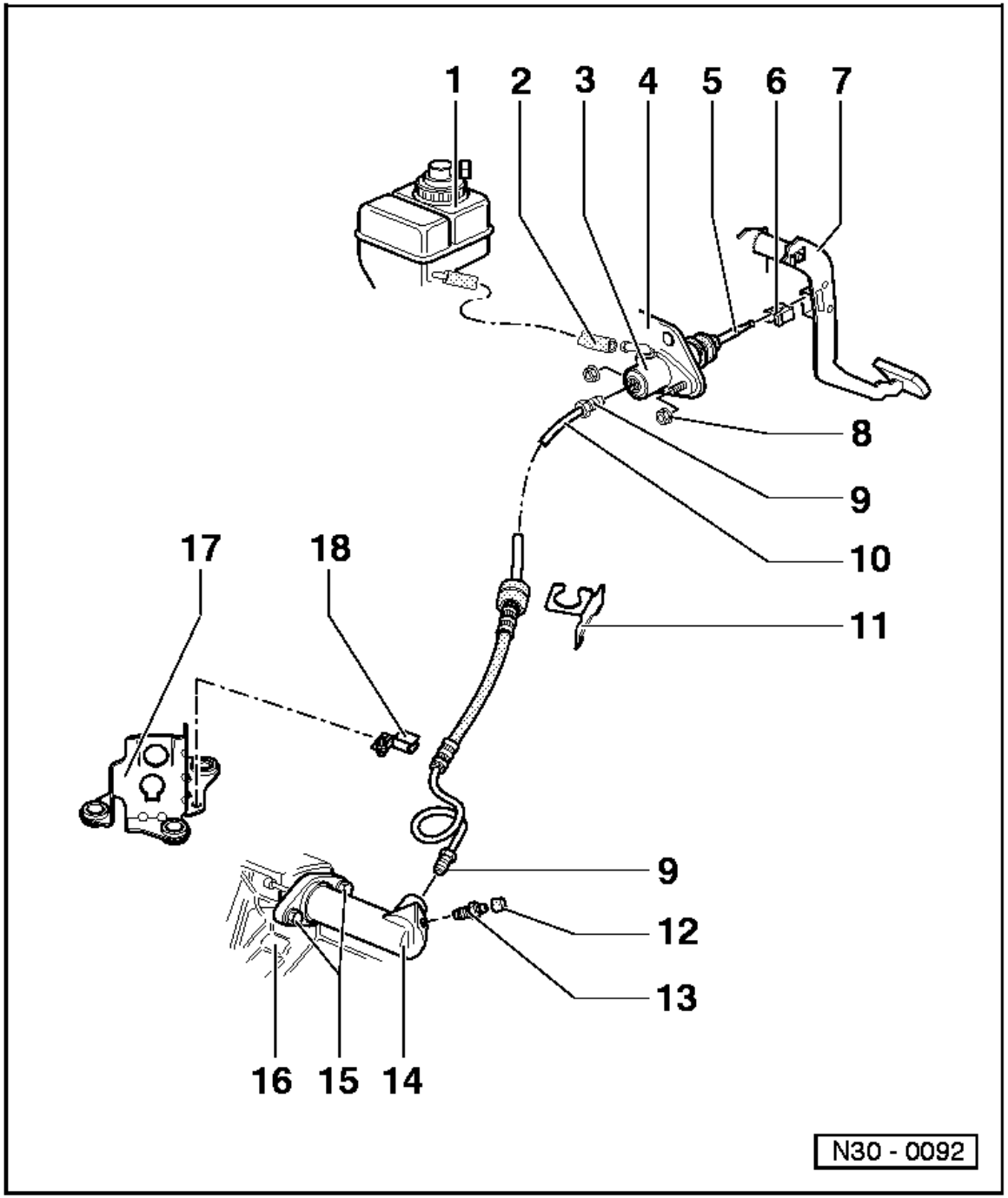

1 - Brake fluid reservoir

2 - Supply hose

3 - Master cylinder
- ◆ Removing and installing
  => Page 30-12

4 - Master cylinder
- ◆ Mounting bracket

5 - Master cylinder rod

6 - Retainer
- ◆ Replace only with master cylinder removed
- ◆ Removing =>Fig.1
- ◆ Pressing on =>Fig.2

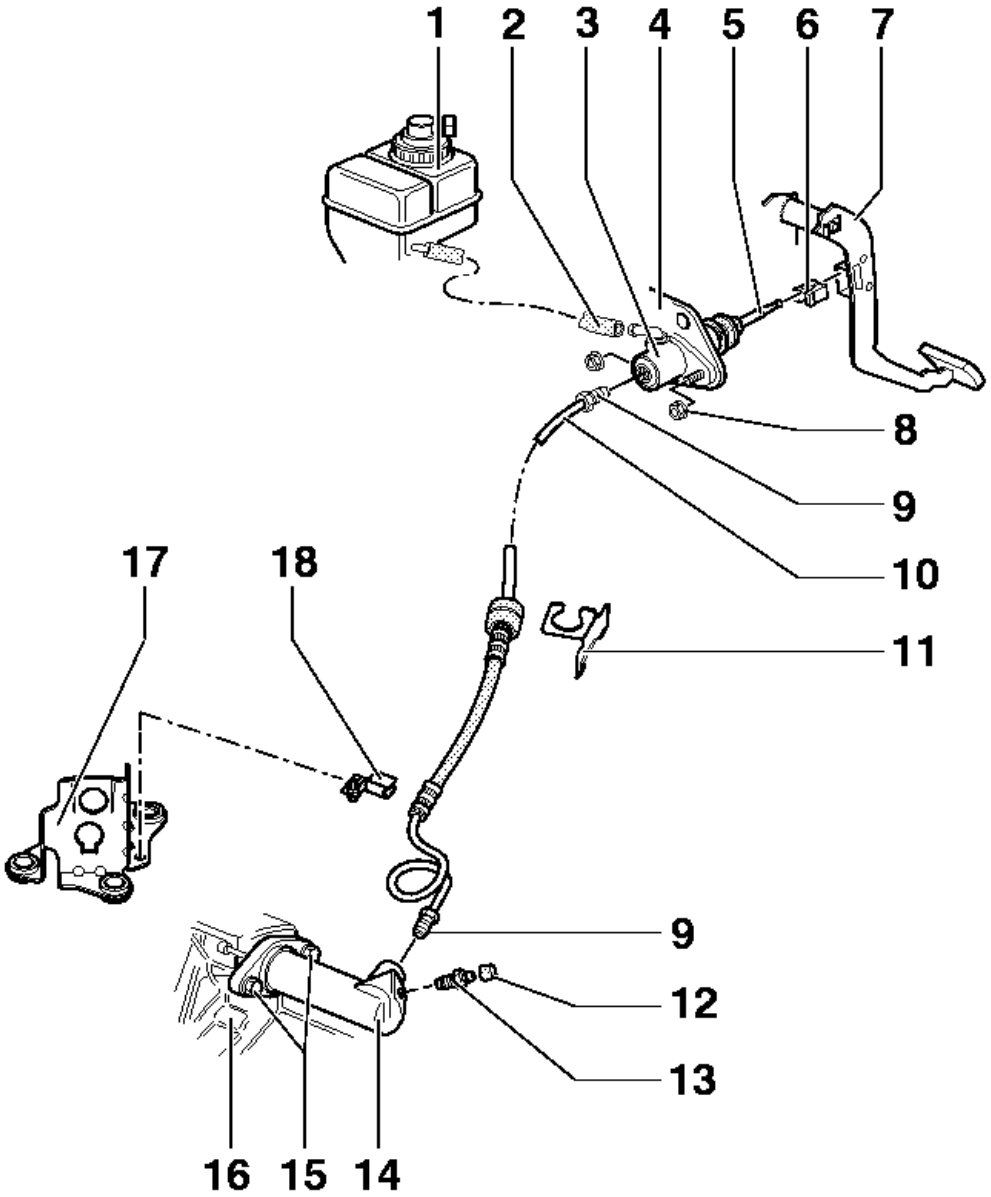

7 - Clutch pedal
- ◆ Removing and installing
  => Page 30-7

8 - Self-locking hexagon nut, 25 Nm
- ◆ Always renew

9 - Pipe union nut, 20 Nm

10 - Hose assembly

11 - Bracket
- ◆ Secured to bodywork

12 - Dust cap

13 - Bleed valve
- ◆ Bleeding clutch system
  => Page 30-14

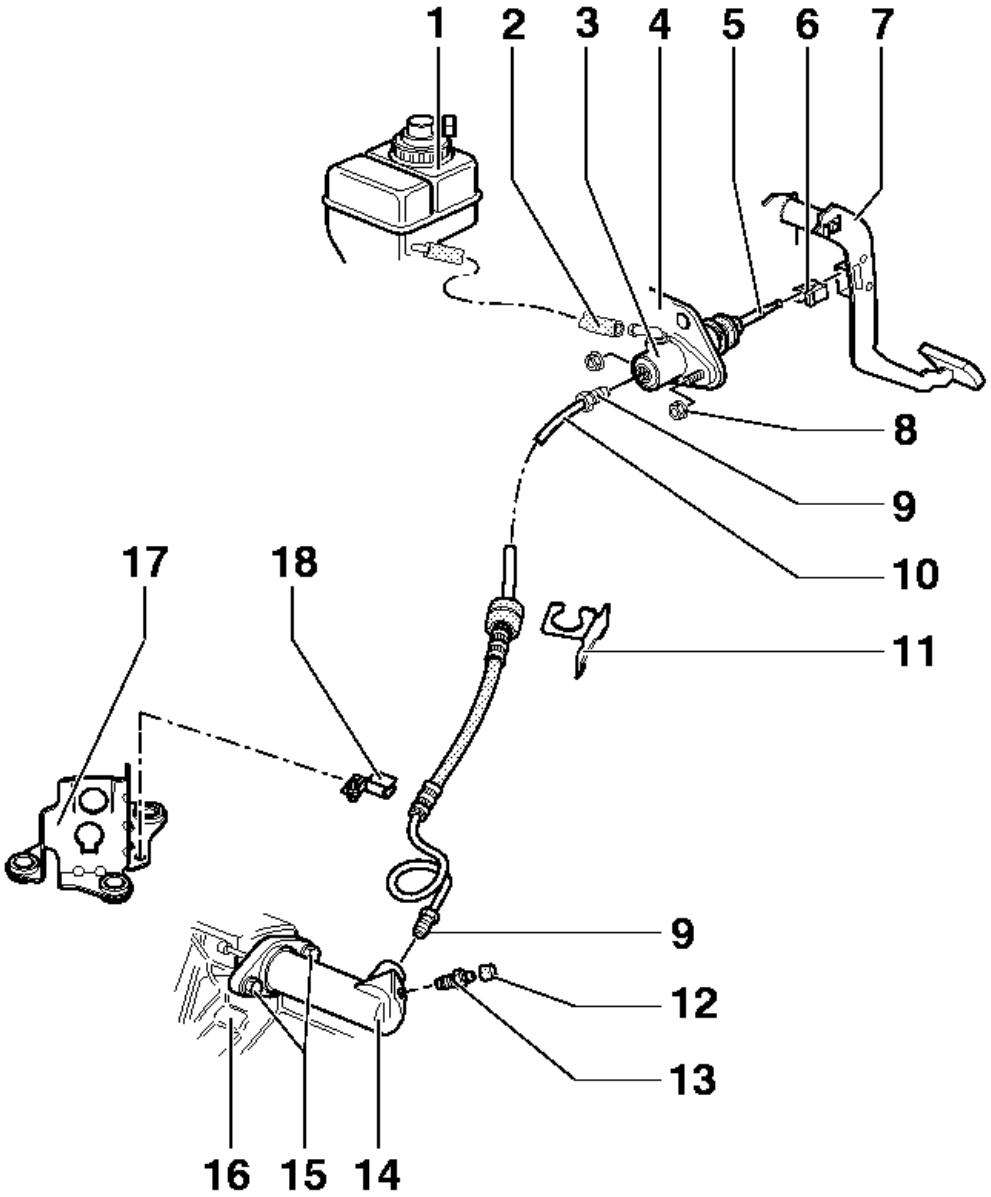

14 - Slave cylinder

◆ Remove the following components before removing slave cylinder:

- Gear selector cable from gear selector lever =>Page 34-4
- Relay lever and actuating arm for gate selector cable => Page 34-7

◆ After installing adjust gear selector mechanism =>Page 34-19

15 - Collared securing bolt, 25 Nm

16 - Gearbox

17 - Support bracket

18 - Hose bracket

◆ Secure to control cable/gear selector cable support bracket

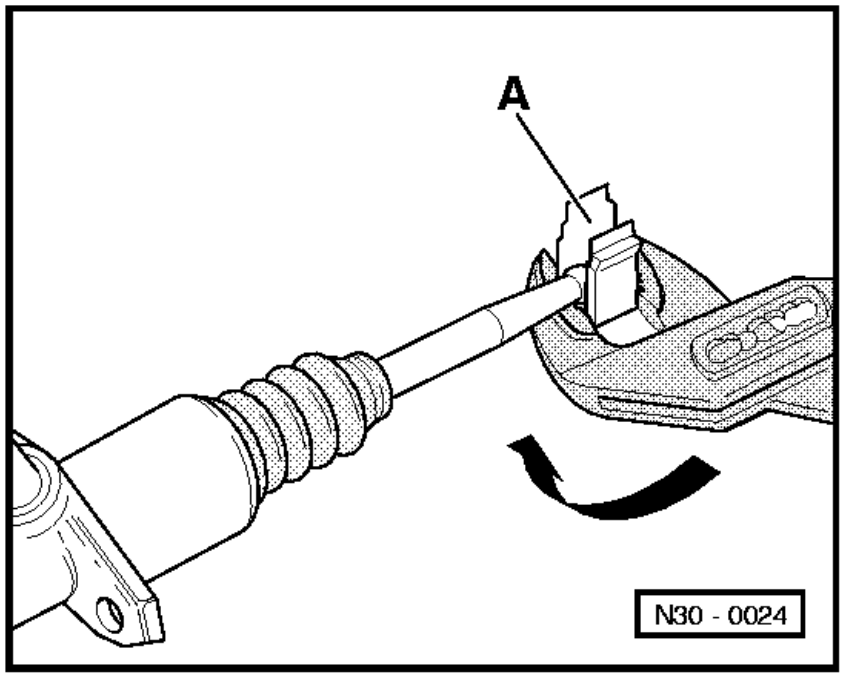

⇦ **Fig.1Lever retainer -A- off in direction of arrow-**

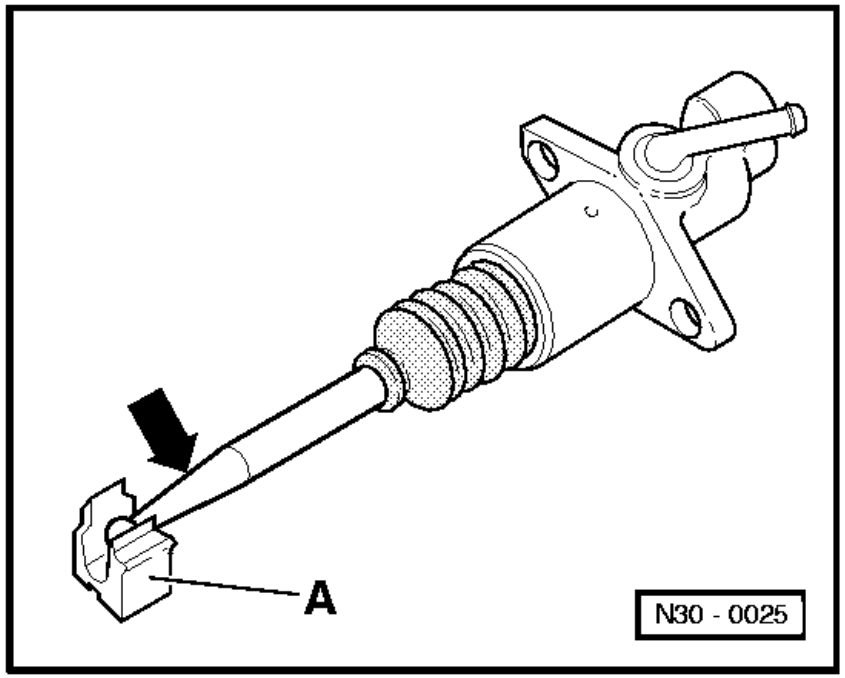

⇦ **Fig.2Press master cylinder operating rod in retainer -A- in direction of arrow**