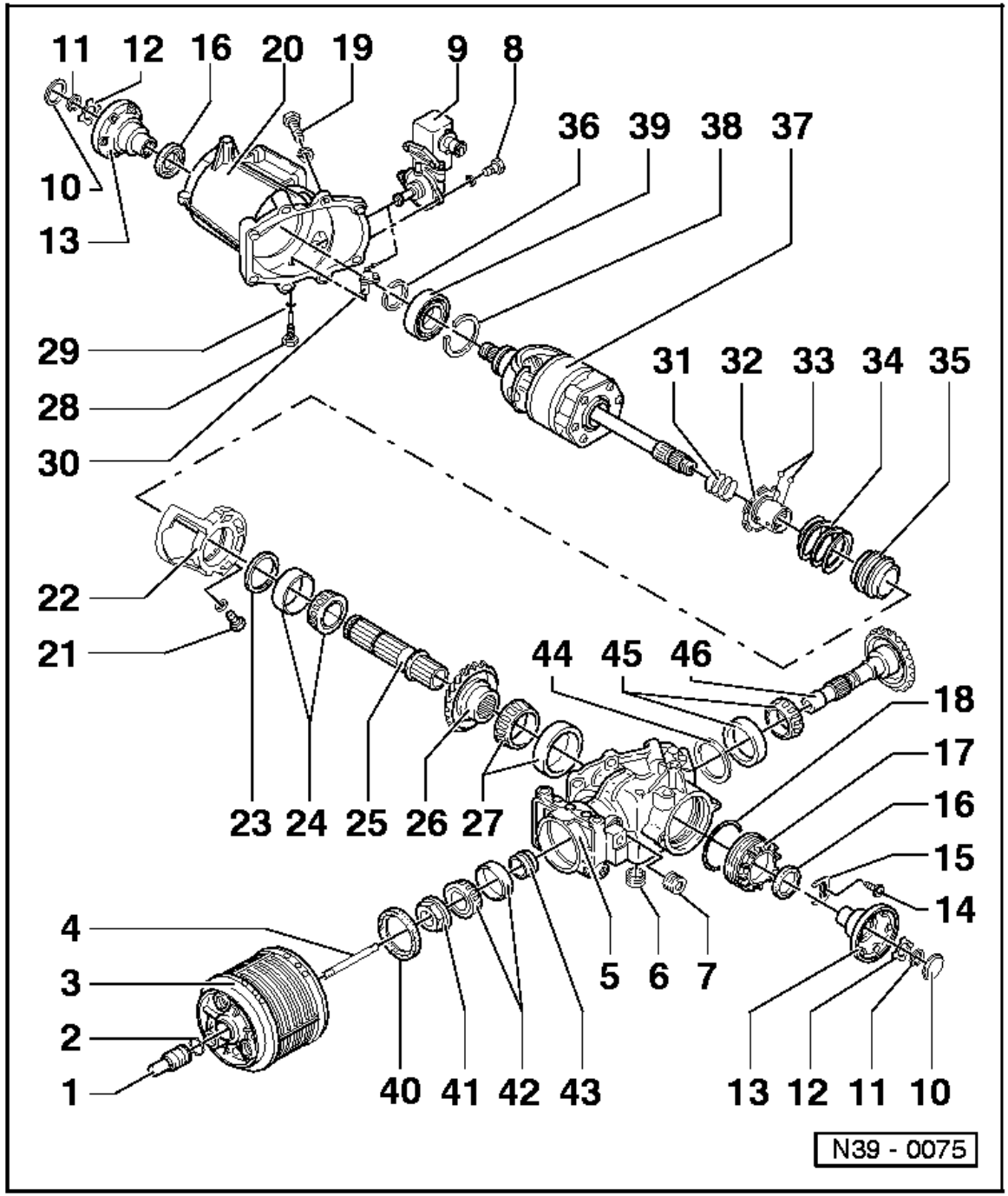

Removing viscous coupling and rear axle housing from bevel gear housing => Page 39-125

Servicing shaft bevel gear bearings => Page 39-127

Pressing bevel gear on and off input shaft => Page 39-134

Servicing bevel gear/input shaft bearings => Page 39-135

Servicing differential bearings => Page 39-140

Removing and installing rear axle housing to bevel box housing and building viscous coupling on => Page 39-142

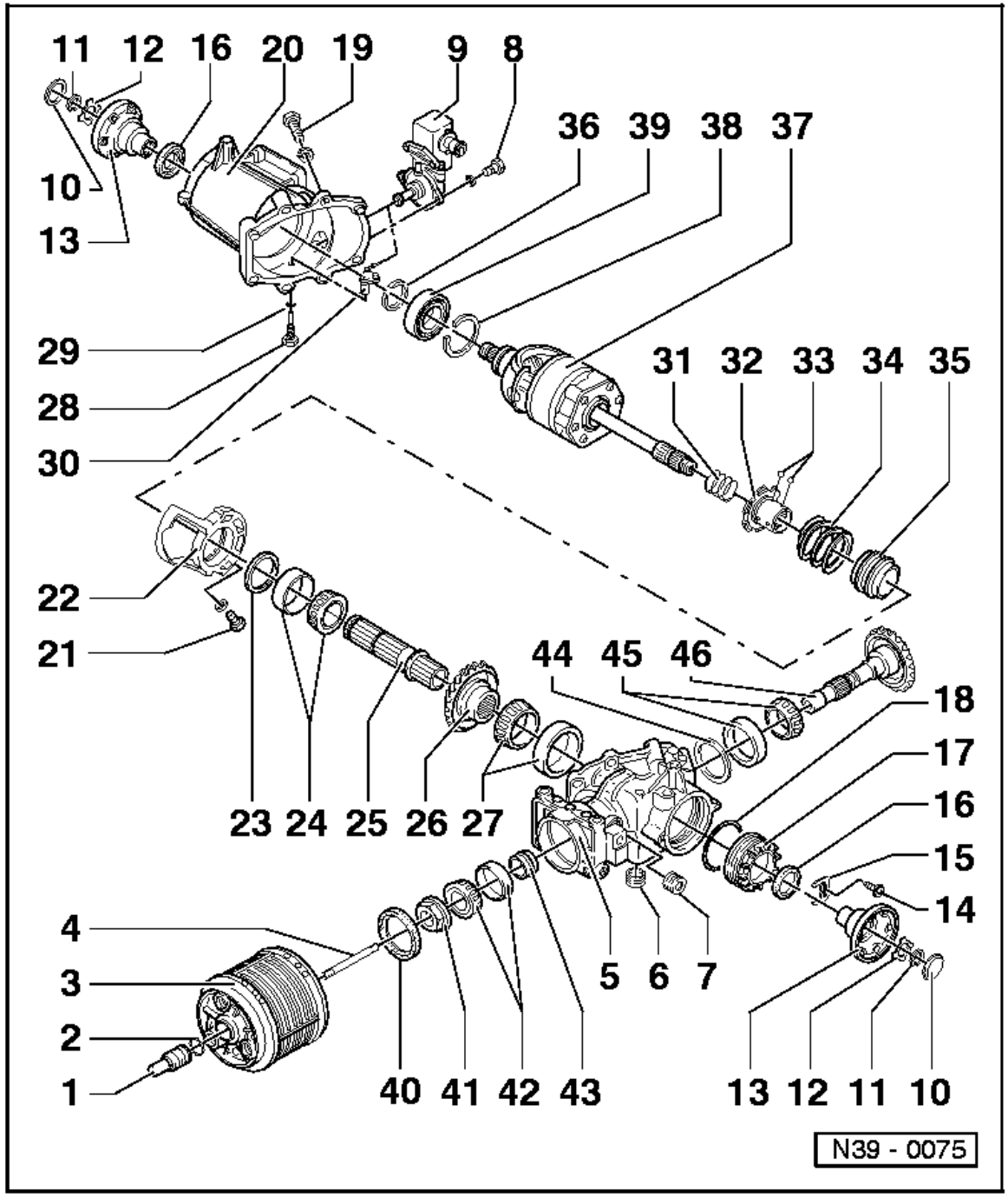

When renewing

- Viscous coupling (item 3)
- Bevel gear (item 26)
- Differential complete with freewheel (item 37)

or

- Shaft bevel gear (item 46)

Observe rear final drive differences on vehicles with 4-cyl. engine or 6-cyl. engine.

1)Adjustment work is required if these components are replaced
=> Adjustment overview Page 39-161.

1 - Centralizing nut
- Removing and installing
  => Page 39-125

2 - O-ring
- Always renew

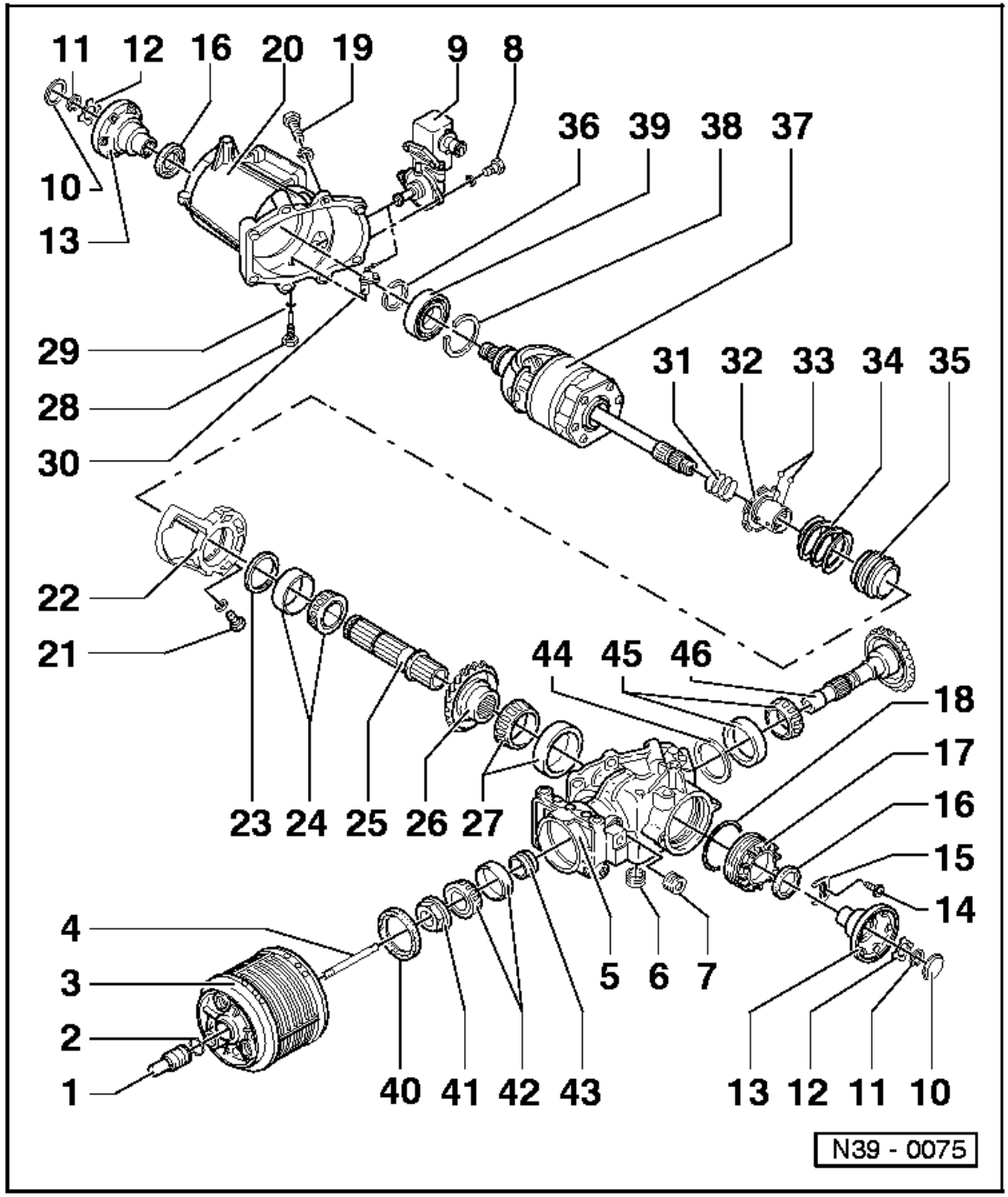

3 - Viscous coupling

- ◆ Functional check
  => Page 39-95
- ◆ Store only in installation position
- ◆ Identification
  => Page 39-97
- ◆ Allocate according to gearbox code letters using parts catalogue => Page 00-6

4 - Stud

- ◆ Before screwing into shaft bevel gear, coat with locking fluid D 000 600 A2

5 - Bevel gear housing[1])

- ◆ Breather installation position
  => Fig.1

6 - Oil drain plug, 25 Nm

- ◆ With magnet

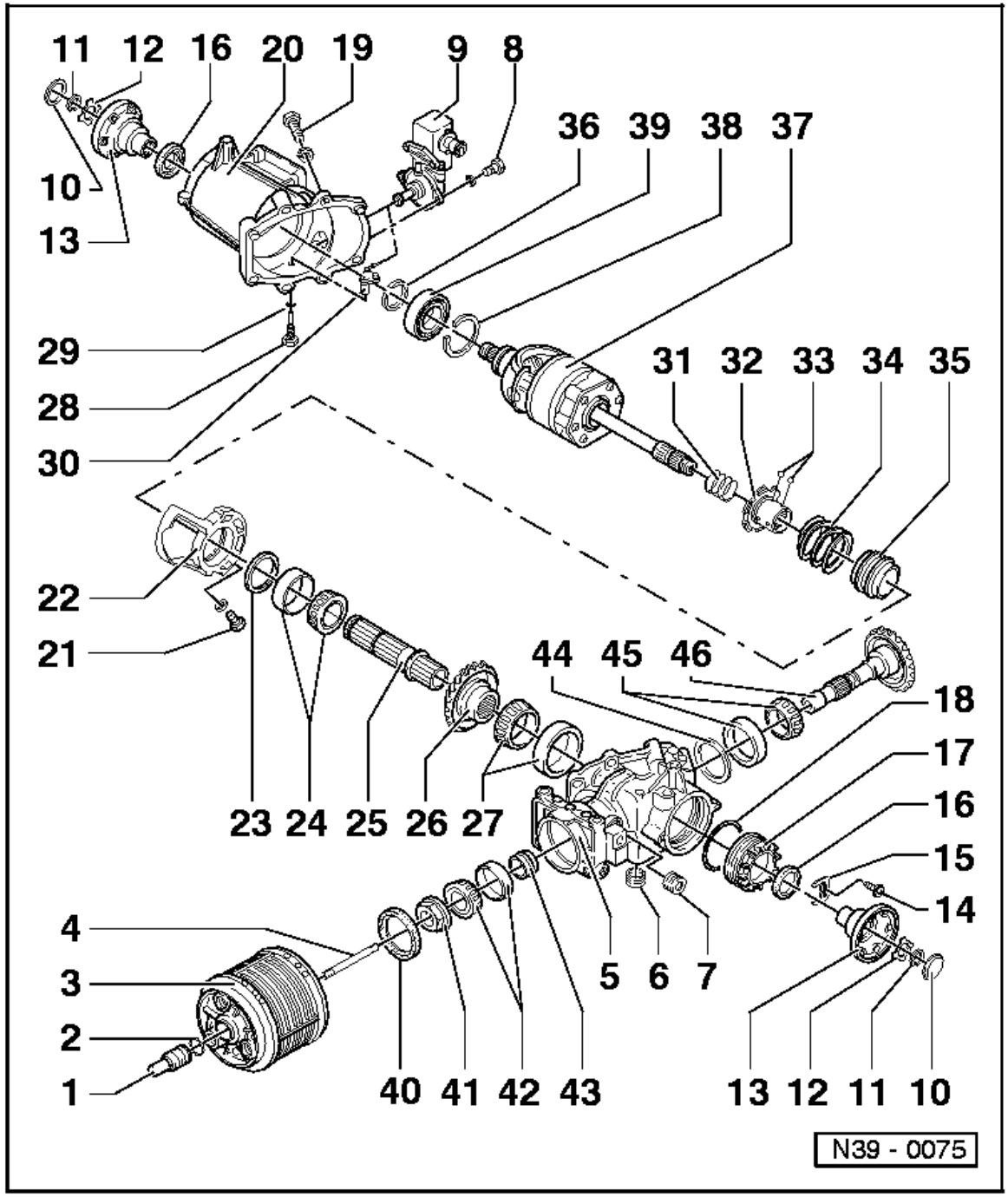

7 - Oil filler plug, 25 Nm

- Capacity and specification => Page 00-6
- Checking rear final drive oil => Page 39-111

8 - Hexagon bolt, 15 Nm

9 - Vacuum unit

- Controls freewheel lock electro-pneumatically
- Removing: unbolt and turn through 90°then take off
- Installing: => Page 39-145
- Installing breather hose => Page 39-105
- Functional check
  => Page 39-103
- Only use cold cleaning products to clean. Seal connections

10 - Sealing cap

- Renewing

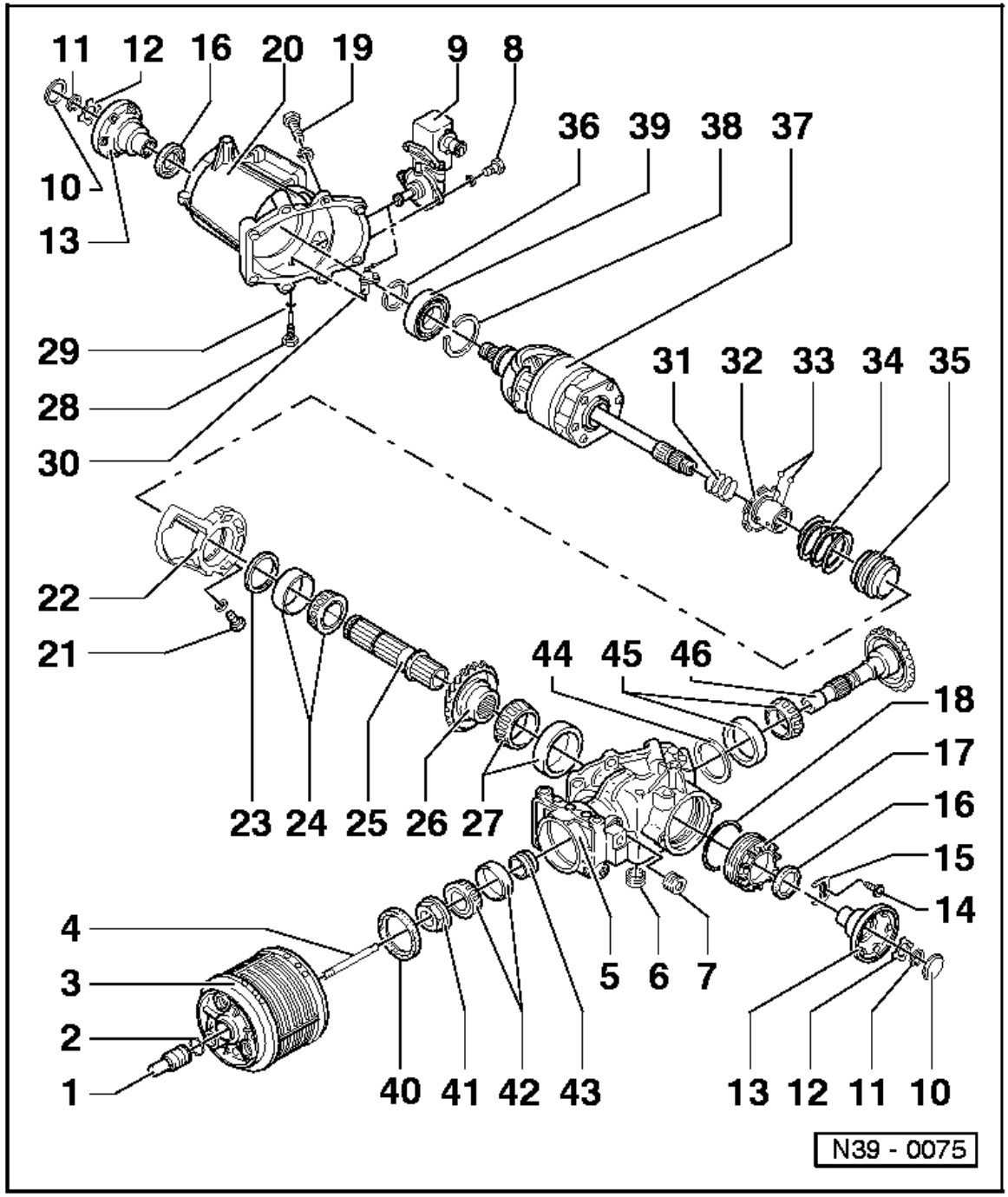

11 - Circlip
- ◆ Use tool 30-23 to press into base of groove
- ◆ Always renew

12 - Dished washer
- ◆ Installation position: Cone points towards circlip

13 - Drive flange
- ◆ Pull in and out with VW 391

14 - Kombi bolt, 10 Nm

15 - Ring nut lock plate
- ◆ Installation position => Page 39-145

16 - Drive flange seal
- ◆ Drive in onto stop with sleeve 3158

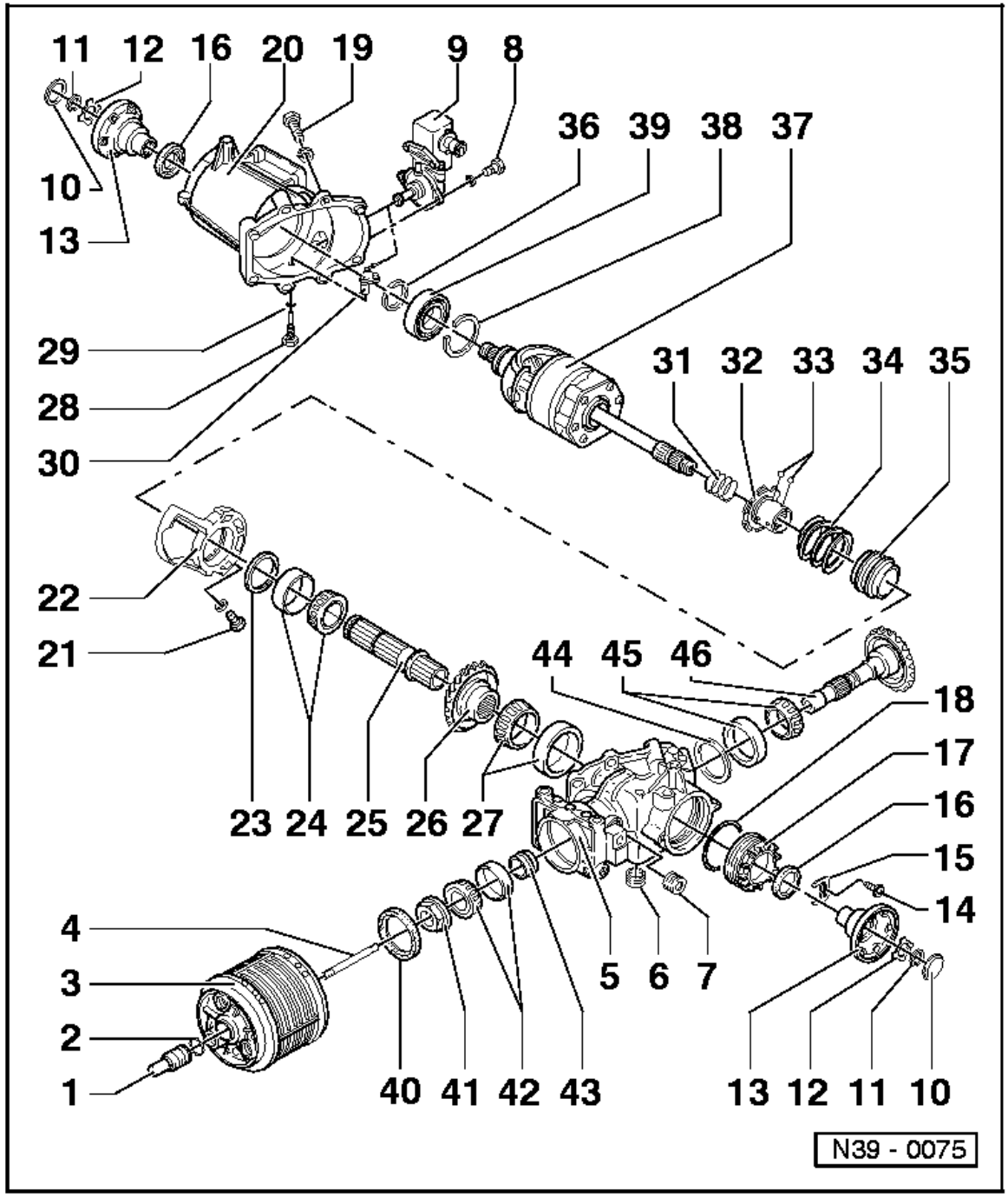

17 - Ring nut[1])

- ◆ Breather holes must not be blocked
- ◆ Breather holes position => Fig.2
- ◆ When reusing used bearings mark position before removing => Page 39-126and when installing tighten again onto original position
- ◆ When installing new bearings observe adjustment instructions => Page 39-161

18 - Ring nut O-ring

- ◆ Always renew

19 - Hexagon bolt, 25 Nm

20 - Rear axle housing with dowel sleeves

- ◆ Qty. 2
- ◆ Ensure dowel sleeves are securely seated

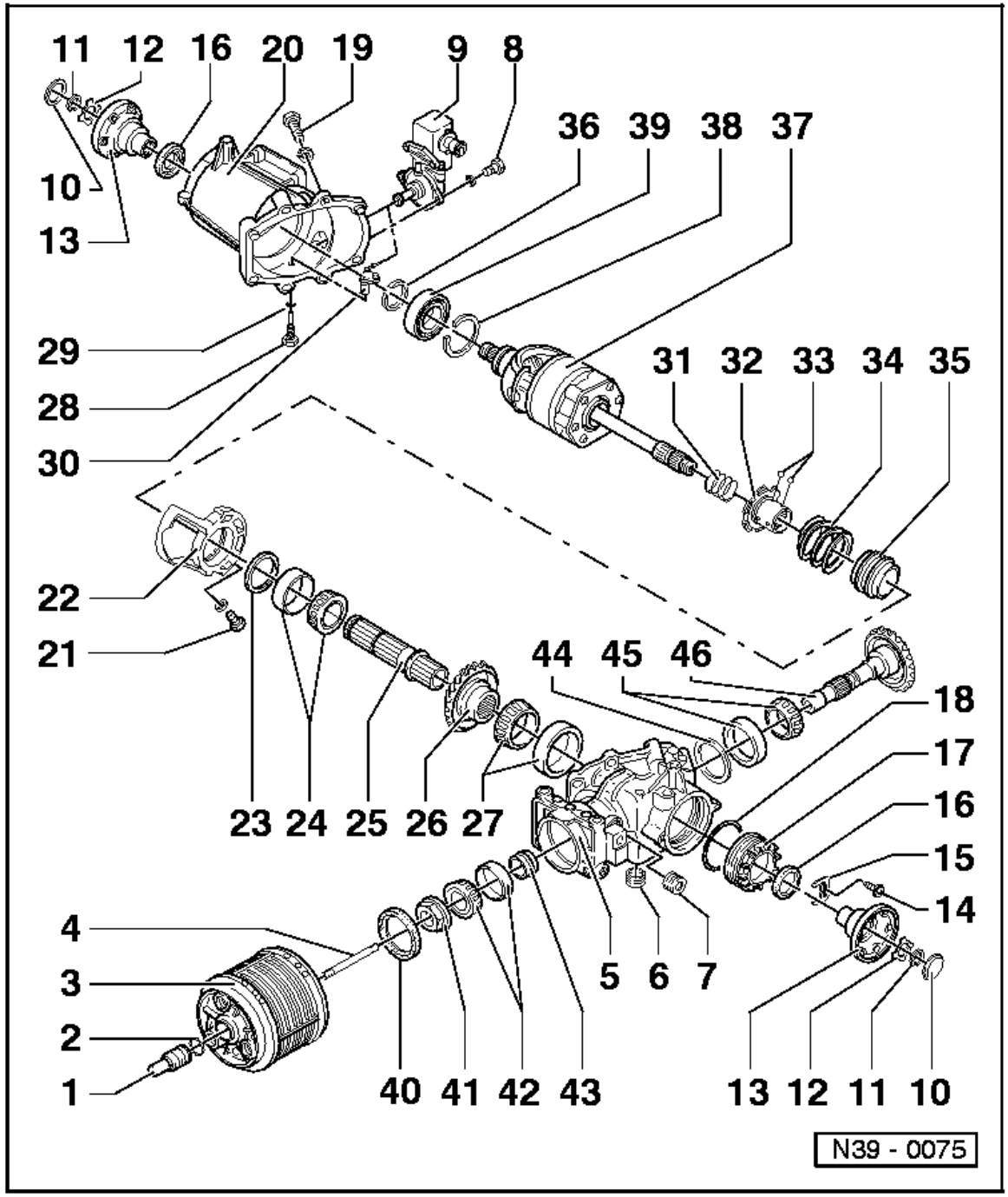

21 - Hexagon bolt, 40 Nm
- Qty. 2
- To secure bearing support (item 22) in rear axle housing

22 - Bearing support[1])
- Bolting off and on
  => Page 39-138

23 - Shim S2
- Note thickness
- Adjustment overview
  => Page 39-161

24 - Small taper roller bearing for mounting bevel gear[1])

Inner race:
- Pressing off => Page 39-136
- Pressing on => Page 39-137

Outer race:
- Pressing out => Page 39-139
- Pressing in => Page 39-139

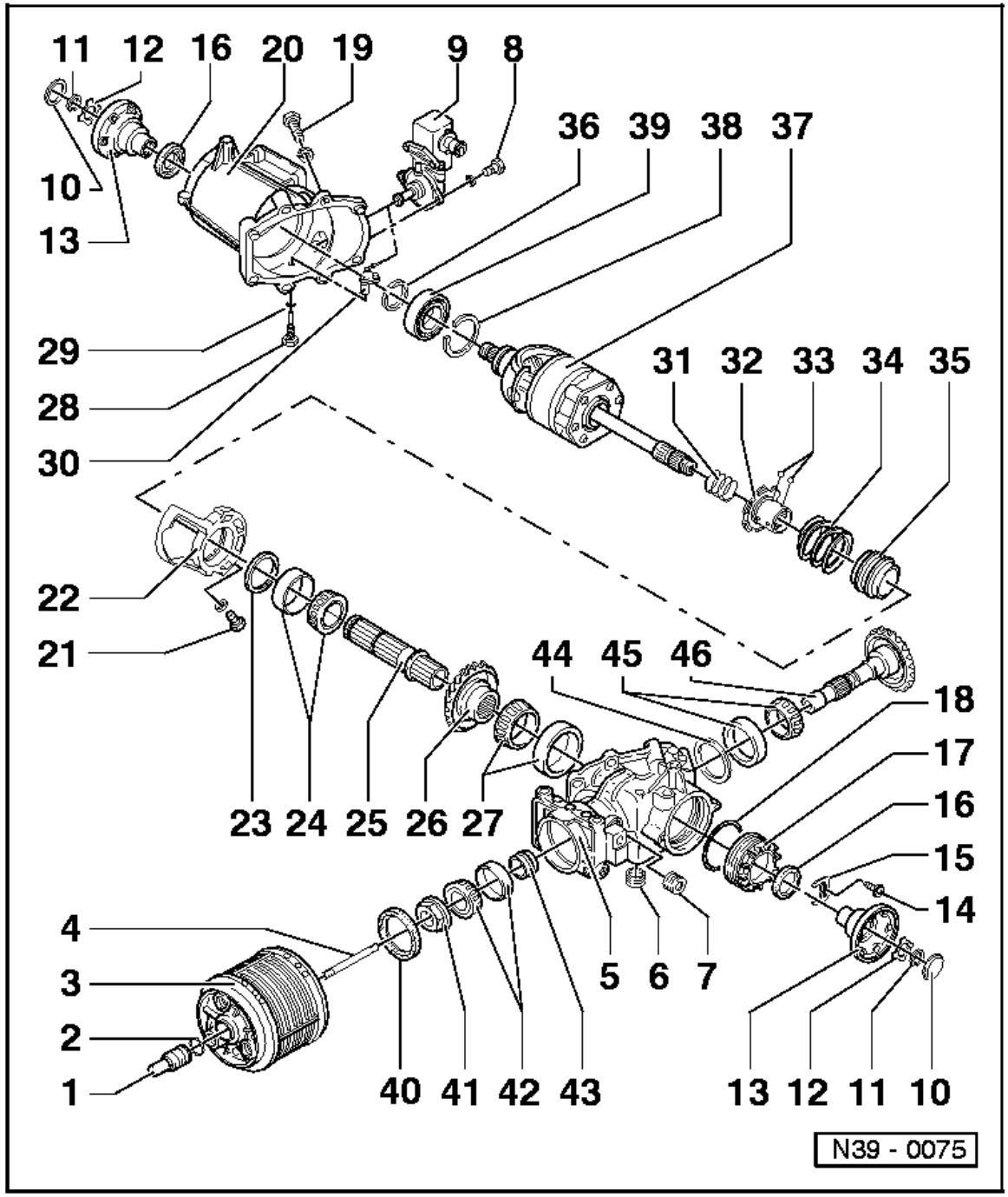

25 - Input shaft[1])

- The input shaft serves as retainer and mounting for the bevel gear as well as the freewheel lock

26 - Bevel gear[1])

- Is paired with shaft bevel gear
- Allocate according to gearbox code letters using parts catalogue => Page 00-6
- Pressing off => Page 39-134
- Pressing on => Page 39-134

27 - Large taper roller bearing for mounting bevel gear[1])

Inner race:

- Pulling off => Page 39-136
- Pressing on => Page 39-137

Outer race:

- Pressing out => Page 39-135
- Pressing in => Page 39-135

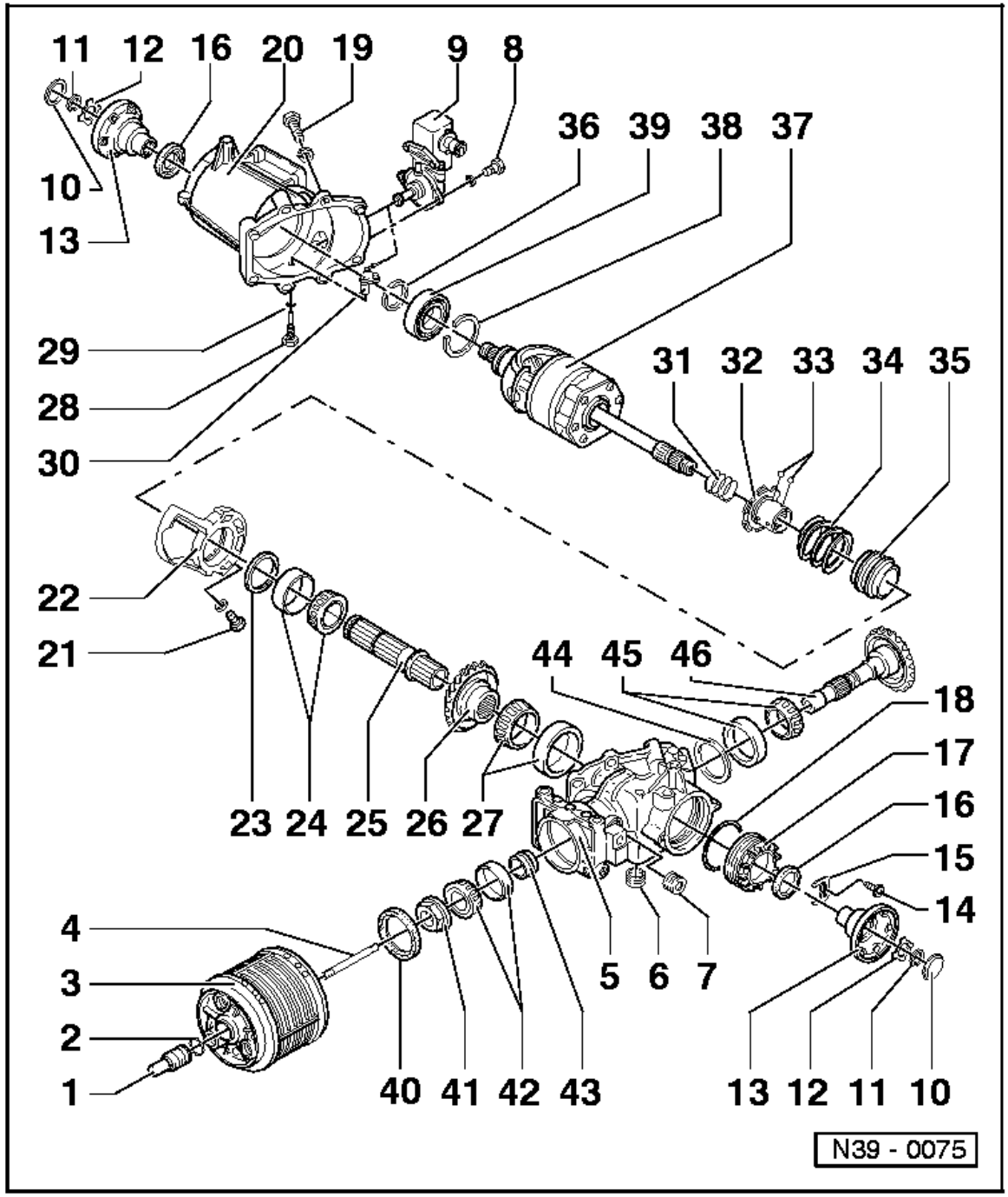

28 - Switch lever mounting bolt, 55 Nm

29 - O-ring
- ◆ Always renew

30 - Switch mechanism for freewheel lock
- ◆ Installation position => Page 39-143

31 - Spring
- ◆ Internal diameter 41 mm
- ◆ Holds switch sleeve at correct distance to switch pins when switched off
- ◆ Installation position => Page 39-143

32 - Switch sleeve

33 - Balls (Qty. 6)
- ◆ Use a thick grease when inserting
- ◆ Installation position => Page 39-143

34 - Spring
- ◆ Internal diameter 60 mm
- ◆ Holds ball bearings in switched off condition
- ◆ Installation position => Page 39-143

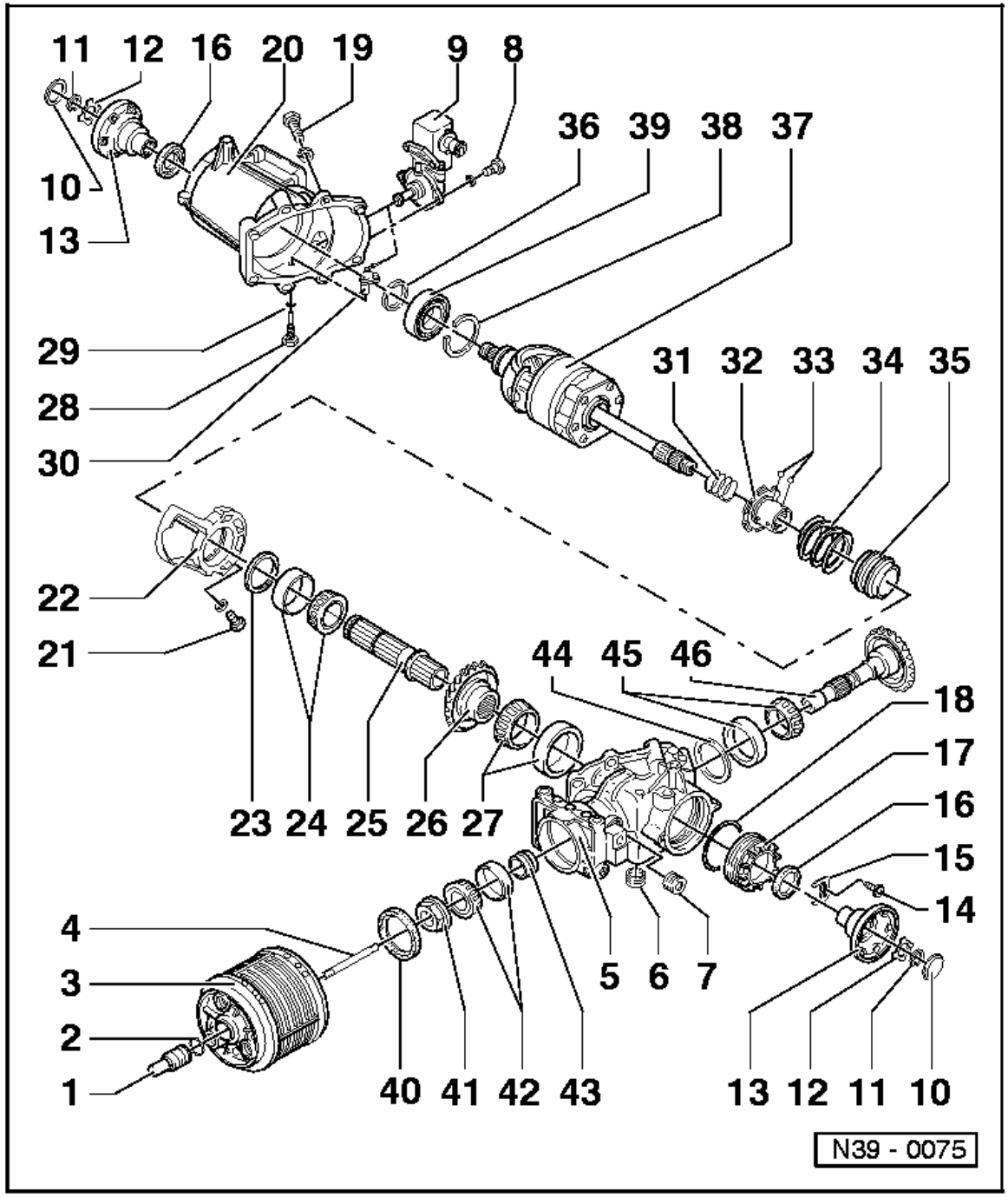

35 - Sliding sleeve

- Installation position => Page 39-143

36 - Circlip

- Holds differential complete with freewheel via bore bearing (item 39) in position in rear axle housing (item 20)
- Installation position => Page 39-140

37 - Differential complete with freewheel

- Pressing out => Page 39-141
- Pulling in => Page 39-141
- Dismantling and assembling differential => Page 39-147
- Functional check of freewheel (on vehicle) => Page 39-102
- Allocate according to gearbox code letters using parts catalogue => Page 00-6

38 - Circlip for ball bearing

- Lever out with large screwdriver

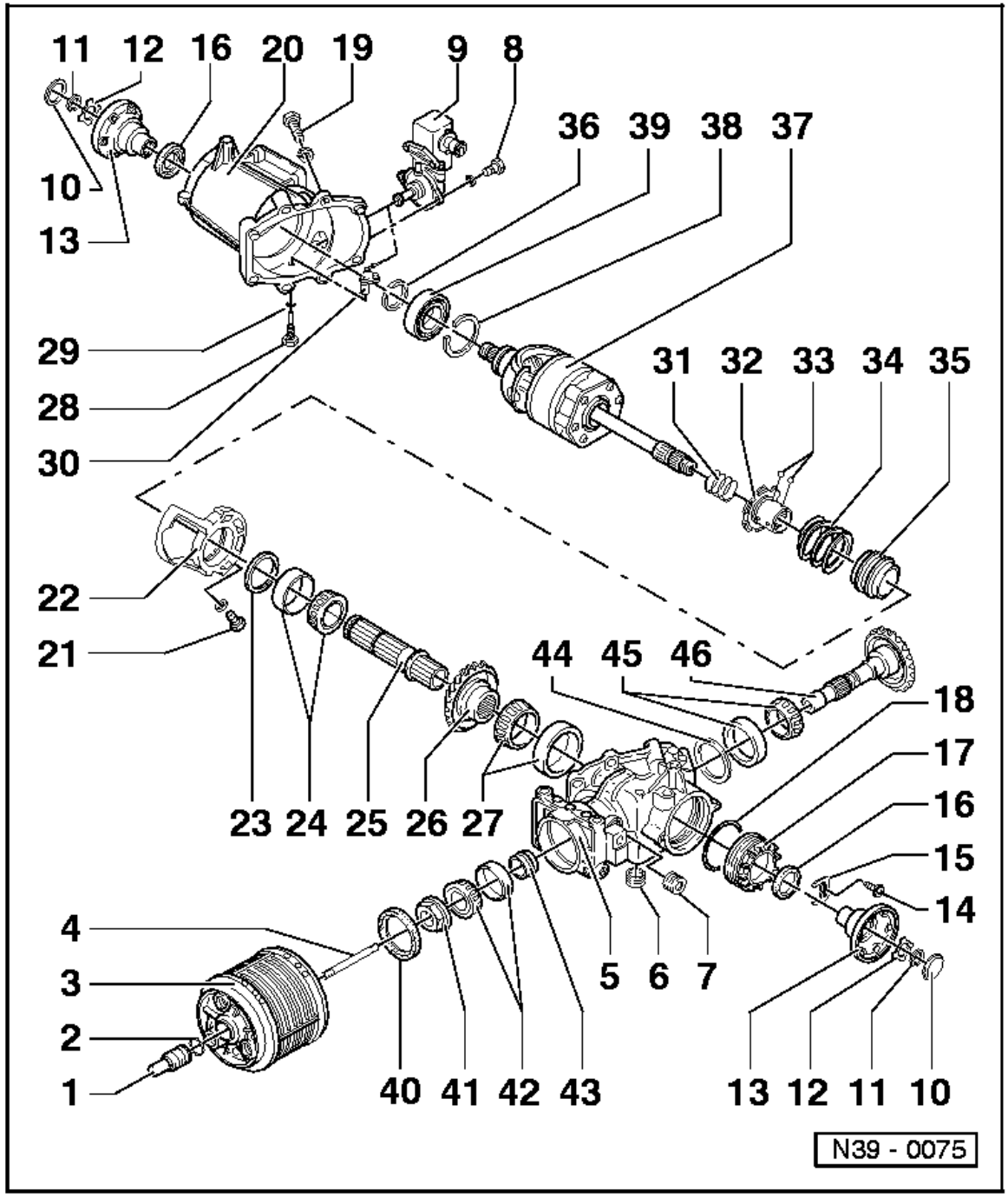

39 - Ball bearing for differential
- ◆ Drive out with VW 512
- ◆ Press in with VW 510
- ◆ Secure with circlip

40 - Oil seal
- ◆ For viscous coupling
- ◆ Drive in onto stop with 3158

41 - Hexagon nut for shaft bevel gear
- ◆ Removing => Page 39-127
- ◆ Installing => Page 39-132

42 - Small taper roller bearing for shaft bevel gear[1])

Inner race:
- ◆ Pressing off => Page 39-128
- ◆ Pressing on => Page 39-132

Outer race:
- ◆ Pressing out => Page 39-128
- ◆ Pressing in => Page 39-131

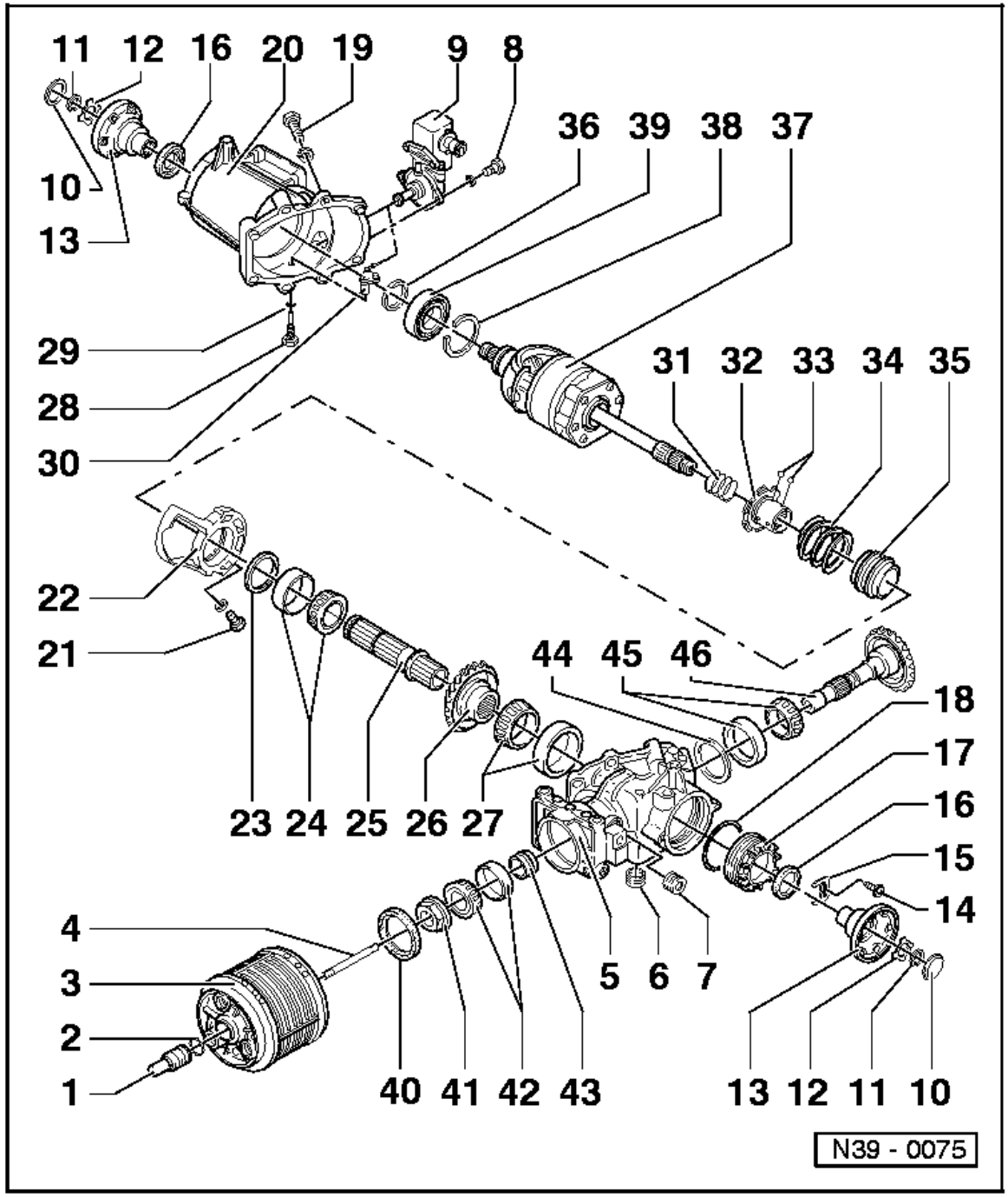

43 - Spacer sleeve
- ◆ Always renew

44 - Shim S3
- ◆ Note thickness
- ◆ Adjustment overview
  => Page 39-161

45 - Large taper roller bearing for shaft bevel gear[1])

Inner race:
- ◆ Pulling off => Page 39-129
- ◆ Pressing on with tube VW 415 a

Outer race:
- ◆ Knocking out => Page 39-129
- ◆ Pressing in => Page 39-130

46 - Shaft bevel gear[1])
- ◆ Is paired with bevel gear
- ◆ Allocate according to gearbox code letters using parts catalogue => Page 00-6
- ◆ Pressing out => Page 39-128

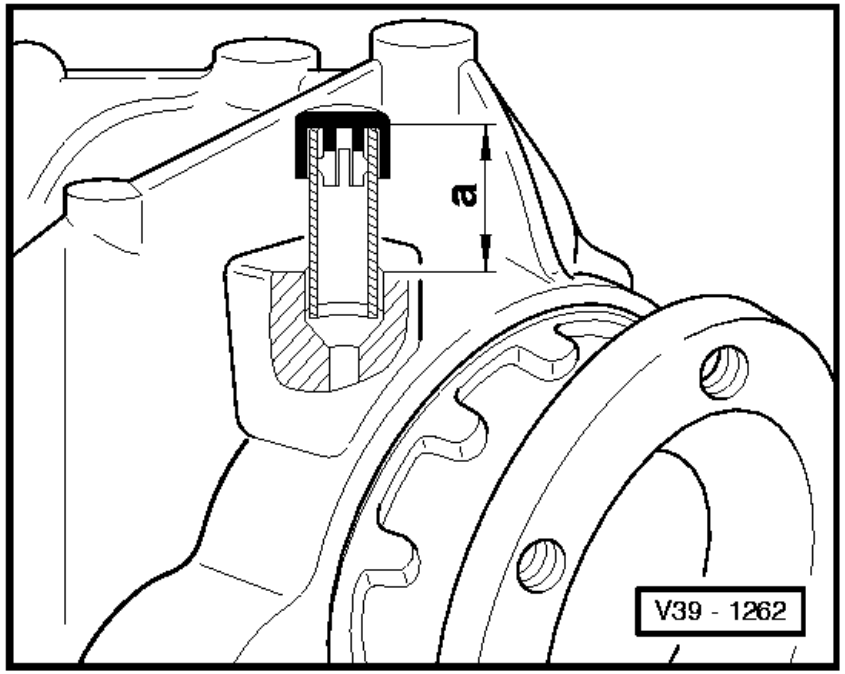

⇦ **Fig.1Breather installation position**

After pressing in the breather must project 16 mm (dimension "a") out of housing.

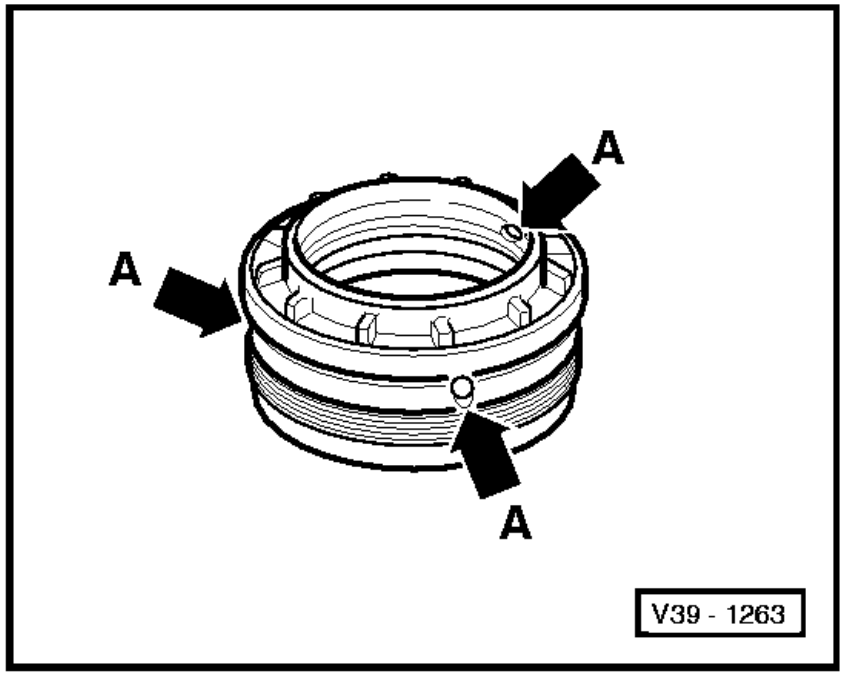

⇦ **Fig.2Position of breather holes (arrows A) in ring nut**