Removing

- Remove centre and rear propshaft sections =>Page 39-80.

Notes:

◆ Mark positions of front, centre and rear propshaft to one another as well as flexible coupling/balance weight to viscous coupling with paint.

◆ By offset installation the imbalance may be so large so as to cause rumbling noises and damage to bearings.

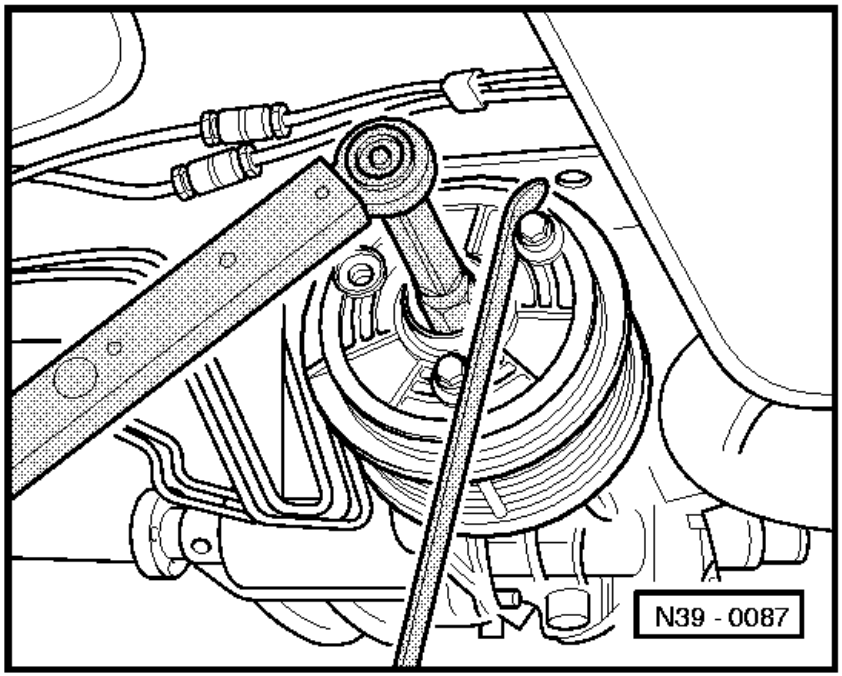

⇦ - Remove centralising nut using spark plug socket, counterhold with lever.

- Remove rear axle anti-roll bar
=> Repair group 42; Servicing rear axle (vehicles with four wheel drive)=>

Note:

Do not loosen the brake pressure regulator lever clamp on anti-roll bar but after removing anti-roll bar detach spring at lever.

- Pull viscous coupling off, note stud.

Installing

Installation is carried out in the reverse sequence, when doing this note the following:

Note:

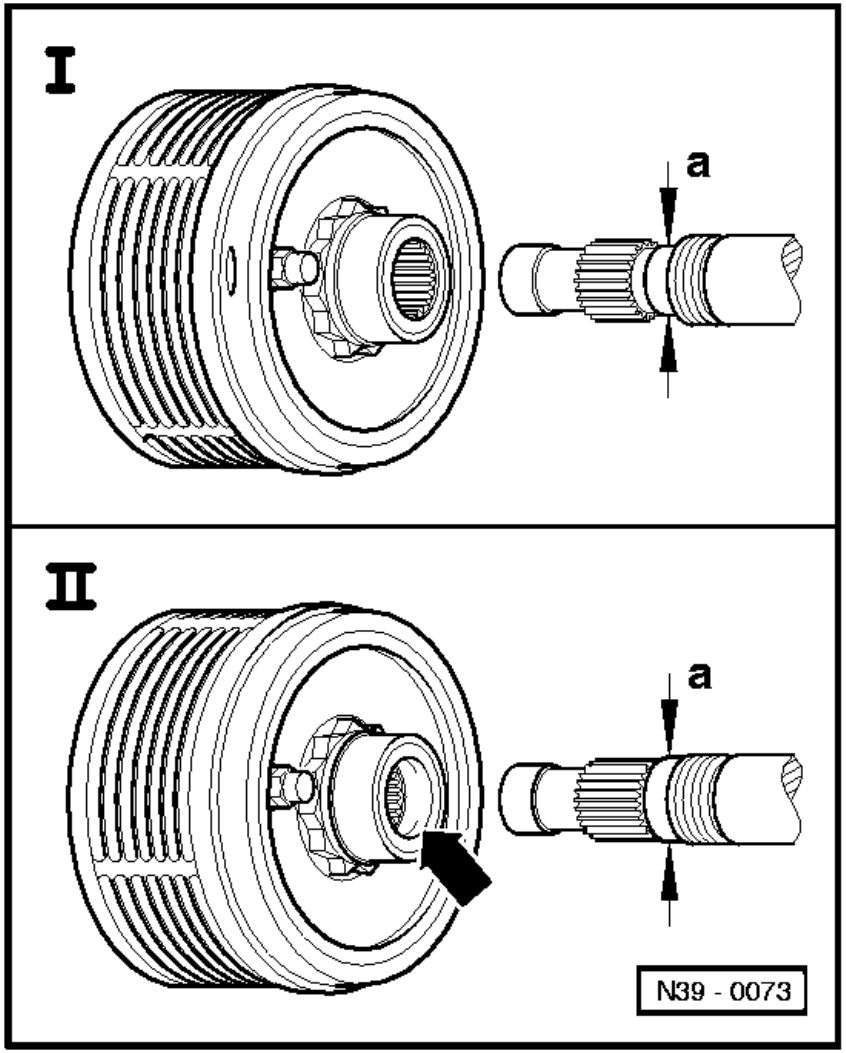

⇦ - Identifying viscous coupling:
I -For vehicles with 4-Cyl. engine:

without recess, shaft bevel gear from rear final drive dimension -a- = 25.5 mm.

II - For vehicles with 6-Cyl. injection engine:

with recess (arrow), shaft bevel gear from rear final drive dimension -a- = 28.0 mm.

- Checking rear final drive oil
  => Page 39-111.

Tightening torques

Viscous coupling centralizing nut to shaft bevel gear	45 Nm
Oil filler plug to bevel gear housing	25 Nm