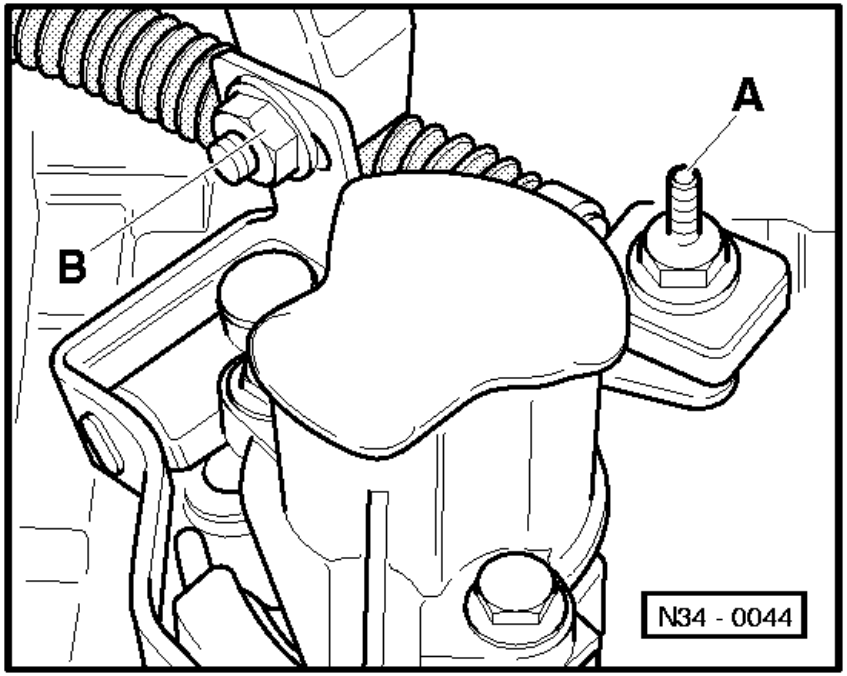

Gearbox in neutral.

- Remove gear stick knob and gaiter => Page 34-10

- Remove balance weight => Page 34-8.

⇦ - Loosen bolt -A- and nut -B-, until the gear selector cable and actuating arm/gate selector cable are free to move in the elongated holes.

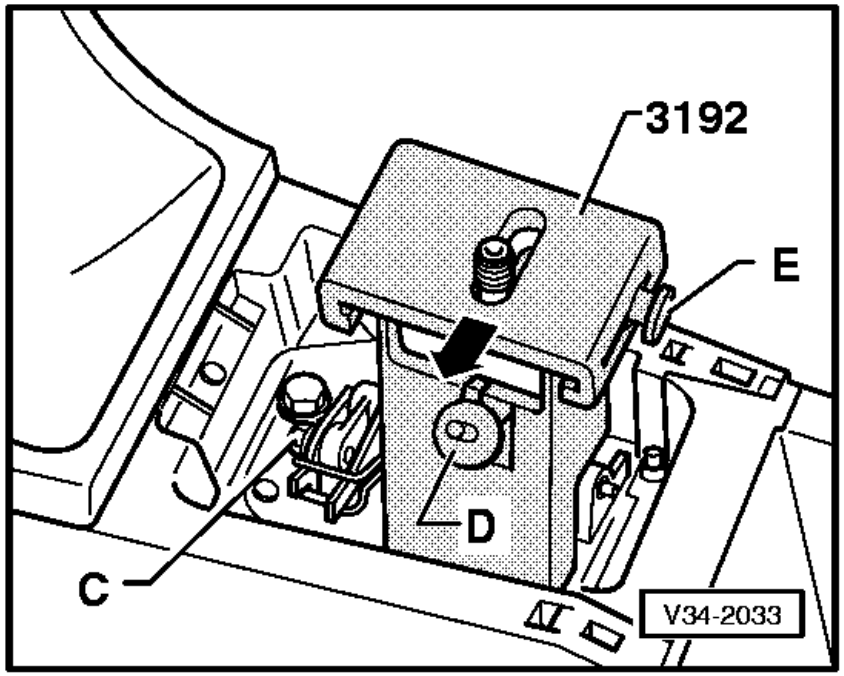

⇦ - Loosen bolt -C- .

- Insert gear stick jig.

- Swing jig securing hook under mounting plate and tighten nut -D-.

- Press gear stick into left-hand detent of sliding piece.

- Press gear stick together with sliding piece to left onto stop (direction of arrow) and tighten sliding piece with bolt -E-.

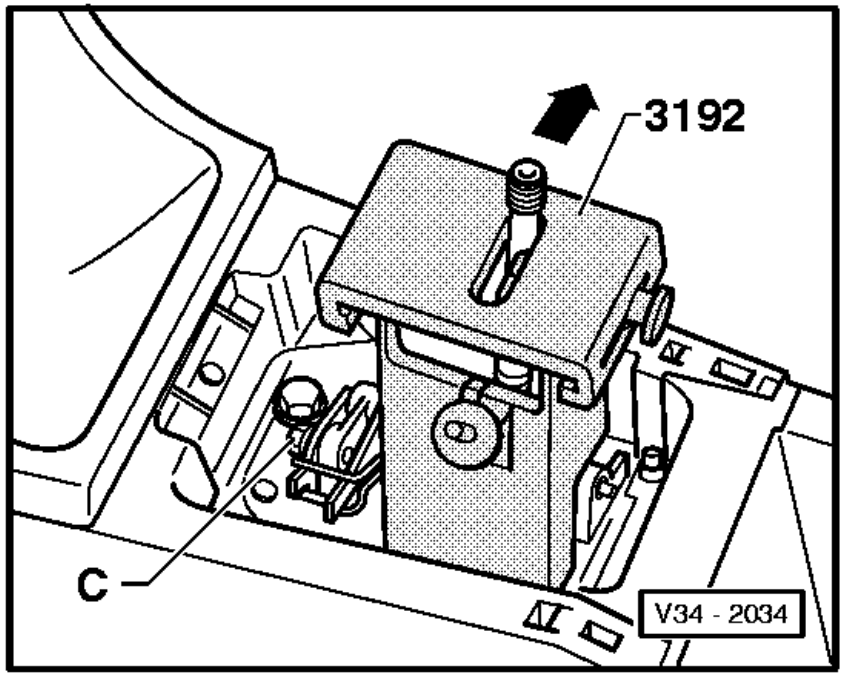

⇦ - Press gear stick into the right-hand detent (direction of arrow).

- Tighten bolt -C-.

- Insert wedge and pin.

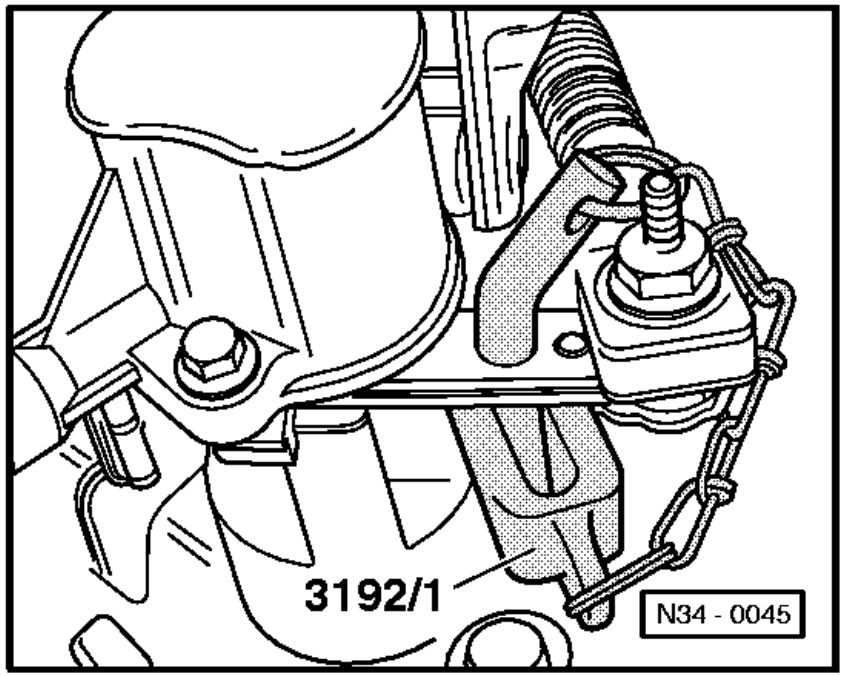

⇦ - Slide wedge between gear selector lever and selector cover plate, ensuring no play.
Note:

Wedge must not lift gear stick.

- In this position secure gear selector cable and actuating arm/gate selector cable, when doing this, check position of wedge.

- Remove gear stick jig.

- Fit gear stick knob and gaiter =>Page 34-10.

Functional check

● The gear stick lever must rest in the 3rd/4th gear plane with gearbox in neutral.

- Depress clutch, start engine, wait approx. 3 ... 6 secs. to allow gearbox input shaft to come to standstill.

- Select all gears several times. Pay particular attention to the operation of the reverse gear catch.

Should a gear fail to engage smoothly after repeated selection, the selector shaft play (lift) should be checked as follows:

- Engage 1st gear.

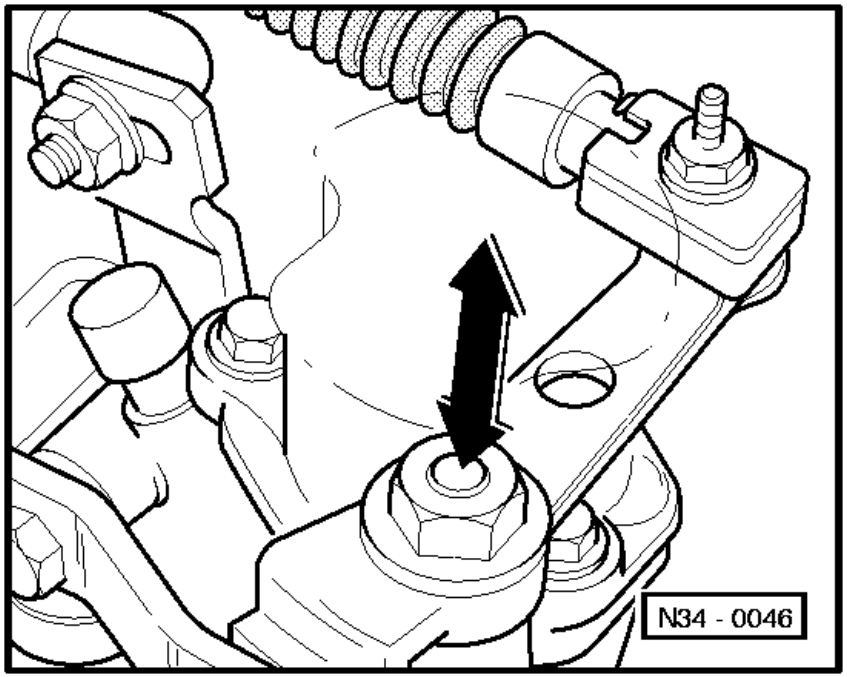

- Press gear stick to left onto stop and release.

- At the same time observe selector shaft in gear box (2nd mechanic).

⇦ - When moving the gear stick the selector shaft must move approx. 1 mm (in direction of arrow).

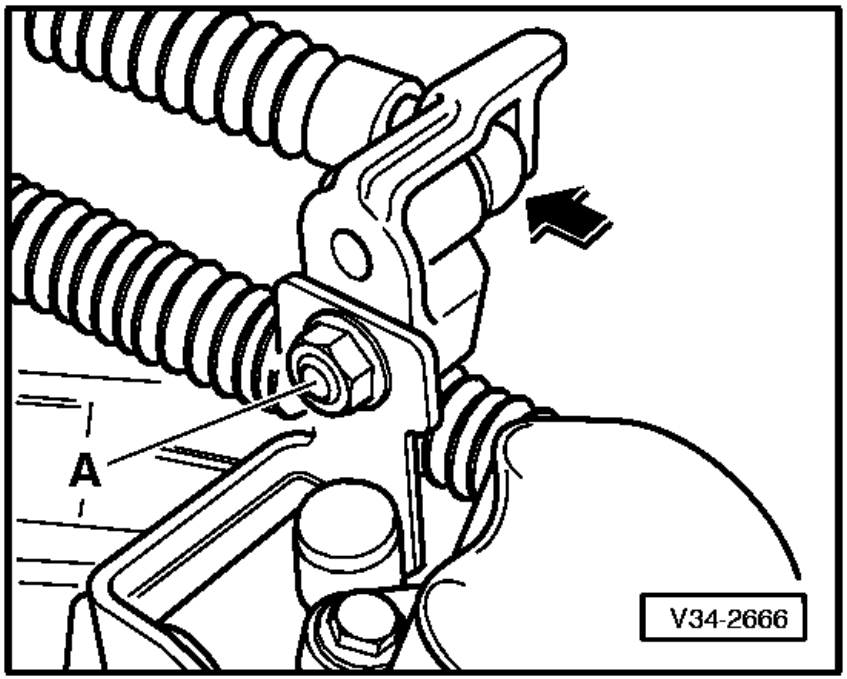

⇦ - Should this not be the case, disengage first gear and again loosen nut -A- for the actuating arm/gate selector cable mounting. (The gate selector cable has a certain amount of play at the mounting - due to the transfer elements).

- Take up gate selector cable play, by lightly pressing the mounting towards the bulkhead (direction of arrow).

- Tighten nut -A- in this position.

Notes:

The following are prerequisites for correct gear linkage adjustment:

◆ Perfect gear linkage operating and transfer elements.

◆ Rubber bushes for mounting the gear and gate selector cables to all operating elements in good condition (not worn).

◆ Gear and gate selector cables move smoothly.

Gearbox, clutch and clutch release mechanism must also be in good condition.