Dismantling and assembling sequence => Page 39-37

Note:

When renewing

◆ Output flange (Item 9),

◆ Shaft bevel gear (Item 19)

or

◆ Bevel gear with input shaft (item 37)
Note differences between gearboxes for vehicles with 4-Cyl. engine and 6-Cyl. injection engine.

[1])Adjustment work is required if these components are replaced
=> Page 39-54

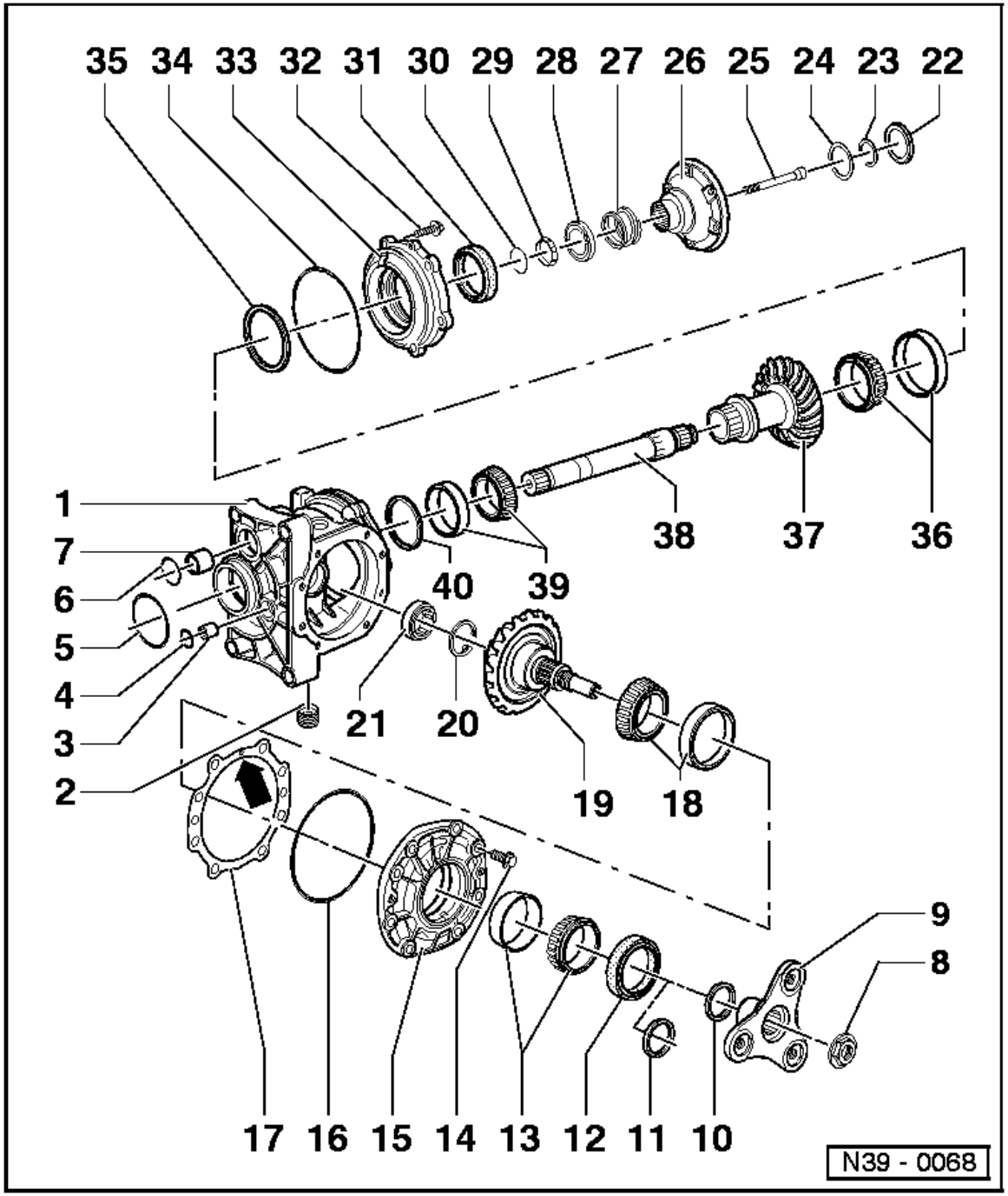

1 - Final drive housing[1])
- Secure bevel box on assembly stand using gearbox support 3221 => Page 39-37, drain oil first

2 - Oil drain plug, 20 Nm
- With magnet

3 - Sleeve for oil supply
- Pulling out => Page 39-43
- Pressing in =>Page 39-43

4 - O-ring
- Always renew

5 - O-ring
- Always renew

6 - O-ring
- Always renew

7 - Sleeve for oil supply
- Pulling out => Page 39-43
- Pressing in => Page 39-43

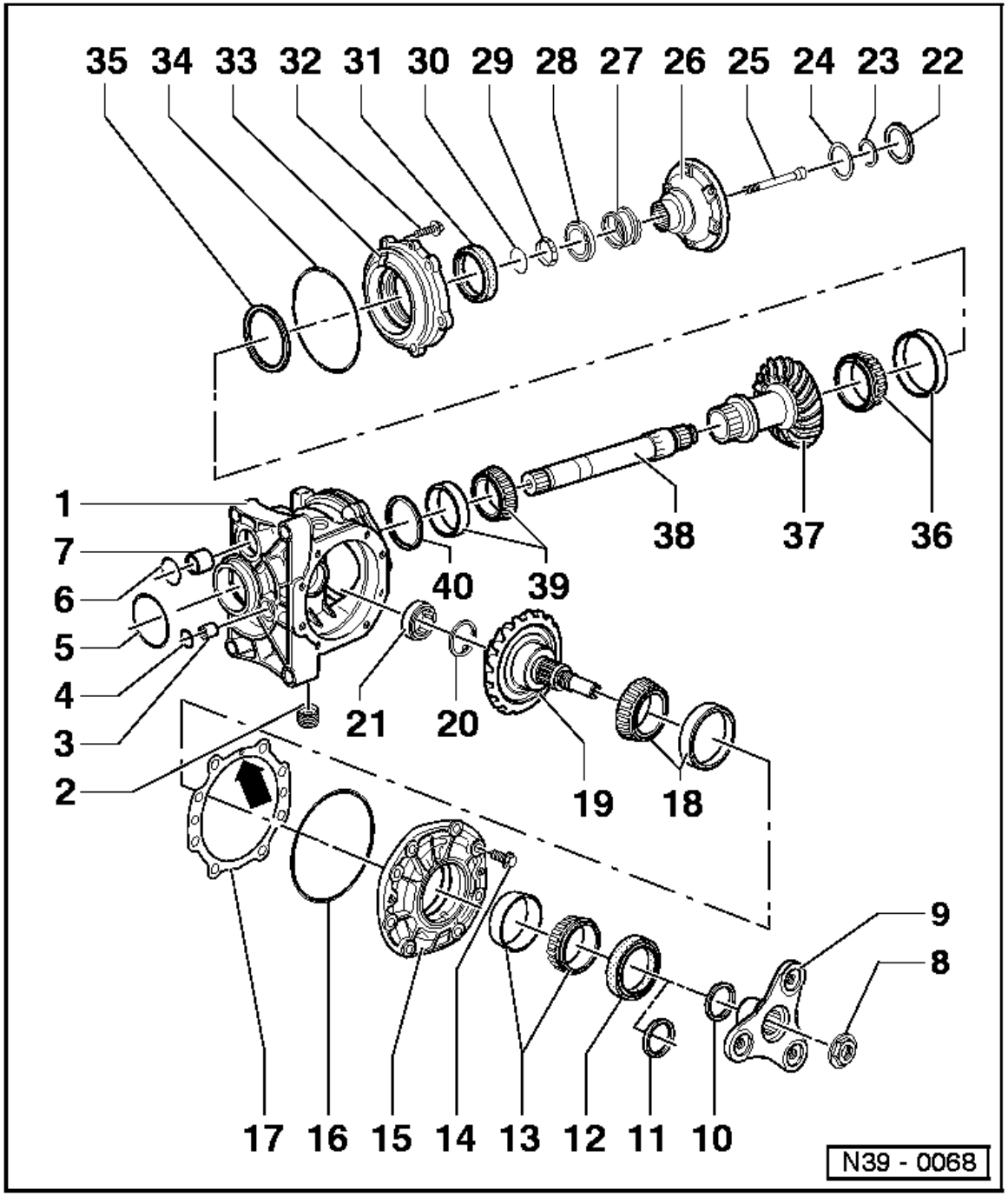

8 - Hexagon nut, 350 Nm

- Removing => Page 39-37
- Fitting => Page 39-49
- Always renew
- Coat with gearbox oil when installing

9 - Output flange[1])

- Identifying the output flange => Page 39-49
- Allocate according to gearbox code letters using parts catalogue => Page 00-3

10 - Shim S4

- Note thickness
- Adjustment overview => Page 39-54
- Fit onto shaft bevel gear (item19) before inserting the small taper roller bearing inner race (item13) and before installing the seal (item 12)
- Fit onto spacer ring (item11) on vehicles with 6-Cyl. engine gearboxes

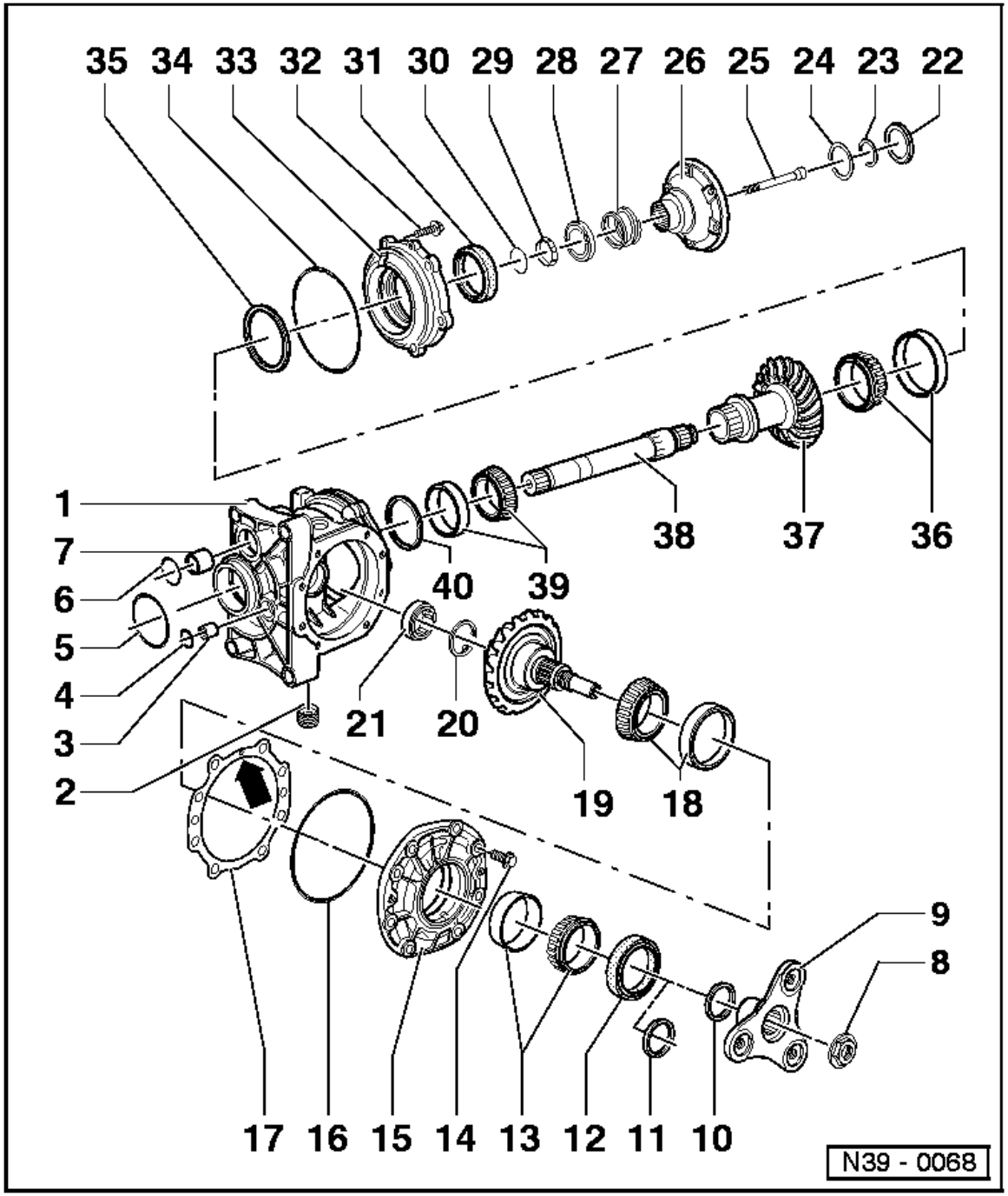

11 - Spacer ring

- Only installed in gearboxes for vehicles with 6-Cyl. engine
- Installation position: Chamfer points towards shaft bevel gear (item19)
- Fit onto shaft bevel gear (item19) before inserting the shim S4 and before installing the small taper roller bearing inner race (item13) and seal (item 12)

12 - Oil seal

- Only replace with bevel box removed
- Pinion housing (item15) need not be removed
- Lever out with screwdriver
- Drive in flush with 40-21 and VW 204 b

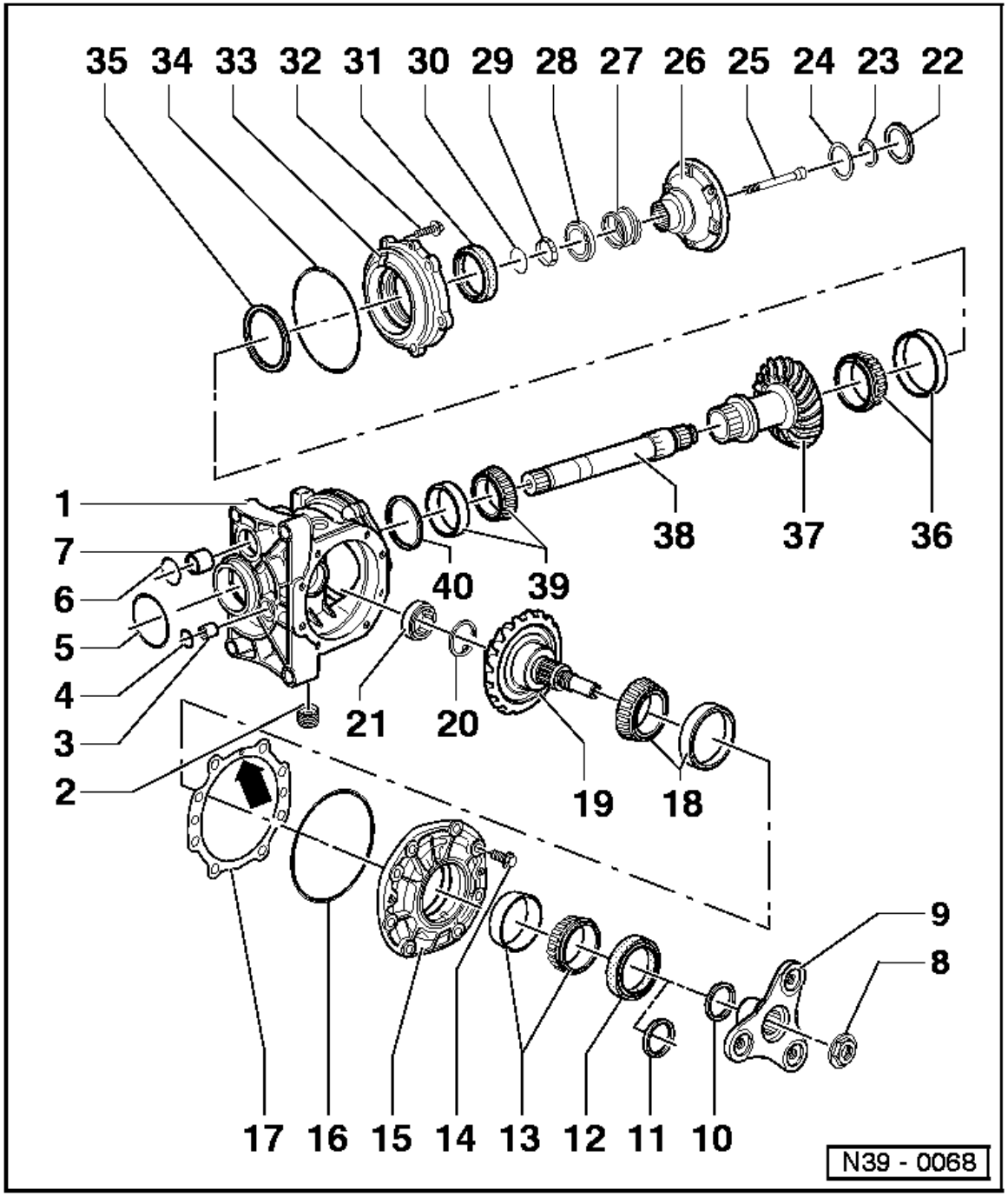

13 - Small taper roller bearing for shaft bevel gear[1])

Outer race:

- Pressing out => Page 39-38
- Pressing in => Page 39-47

Inner race:

- Place into outer race

14 - Bolt, 25 Nm

15 - Pinion housing[1])

- Removing =>Page 39-38
- Installing => Page 39-48
- Do not cant when installing, tighten securing bolts in diagonal sequence and in stages

16 - O-ring

- Always renew
- Must lie in groove

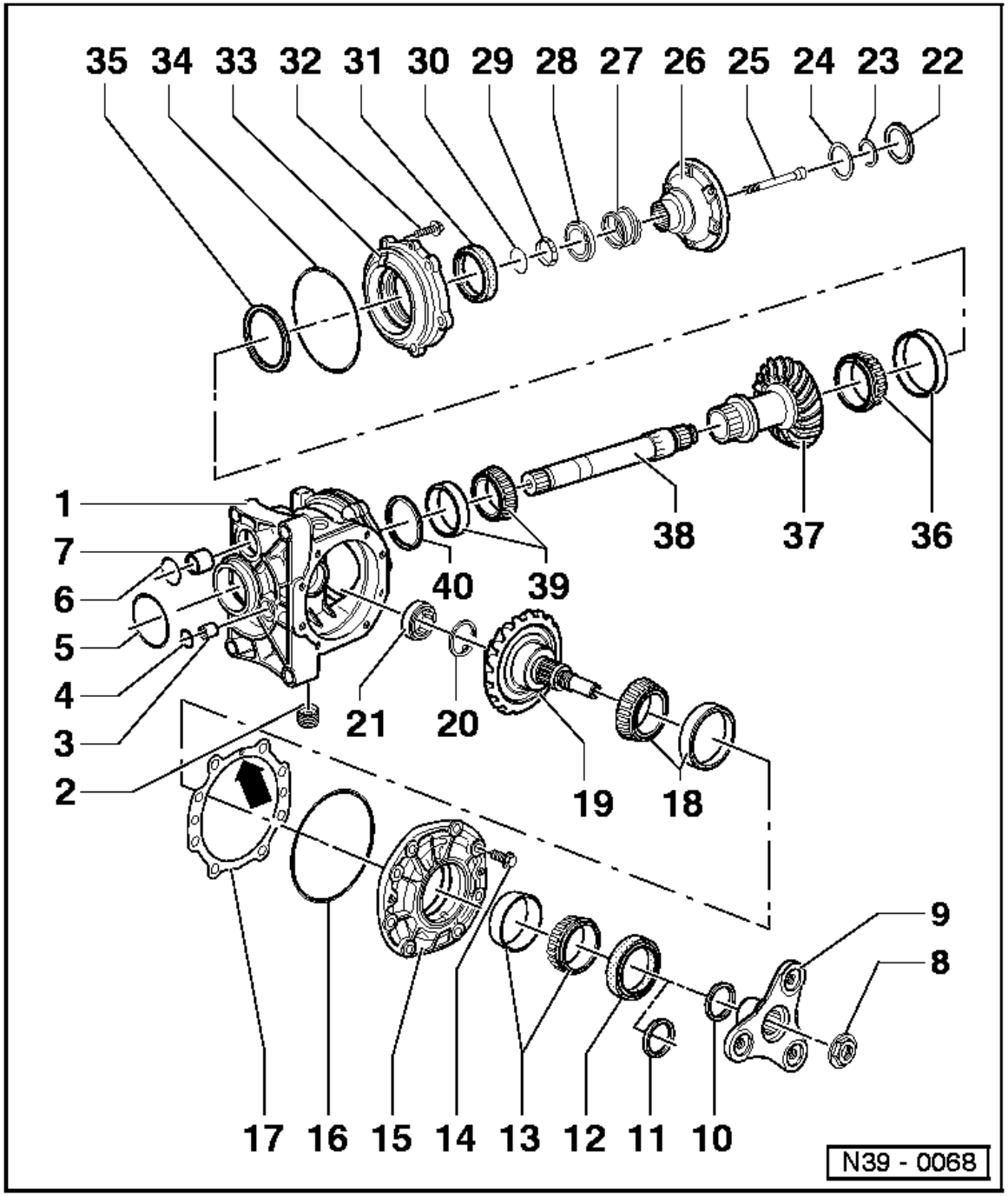

17 - Shim S3

- Note thickness
- Adjustment overview
  => Page 39-54
- The identification drilling (arrow) is located opposite to oil drain plug (item 2)

18 - Large taper roller bearing for shaft bevel gear[1])

Inner race:

- Pulling off => Page 39-39
- Pressing on => Page 39-46

Outer ring:

- Pulling out => Page 39-39
- Pressing in => Page 39-47

19 - Shaft bevel gear[1])

- Is paired with bevel gear
- Allocate according to gearbox code letters using parts catalogue => Page 00-3
- Adjusting => Page 39-59

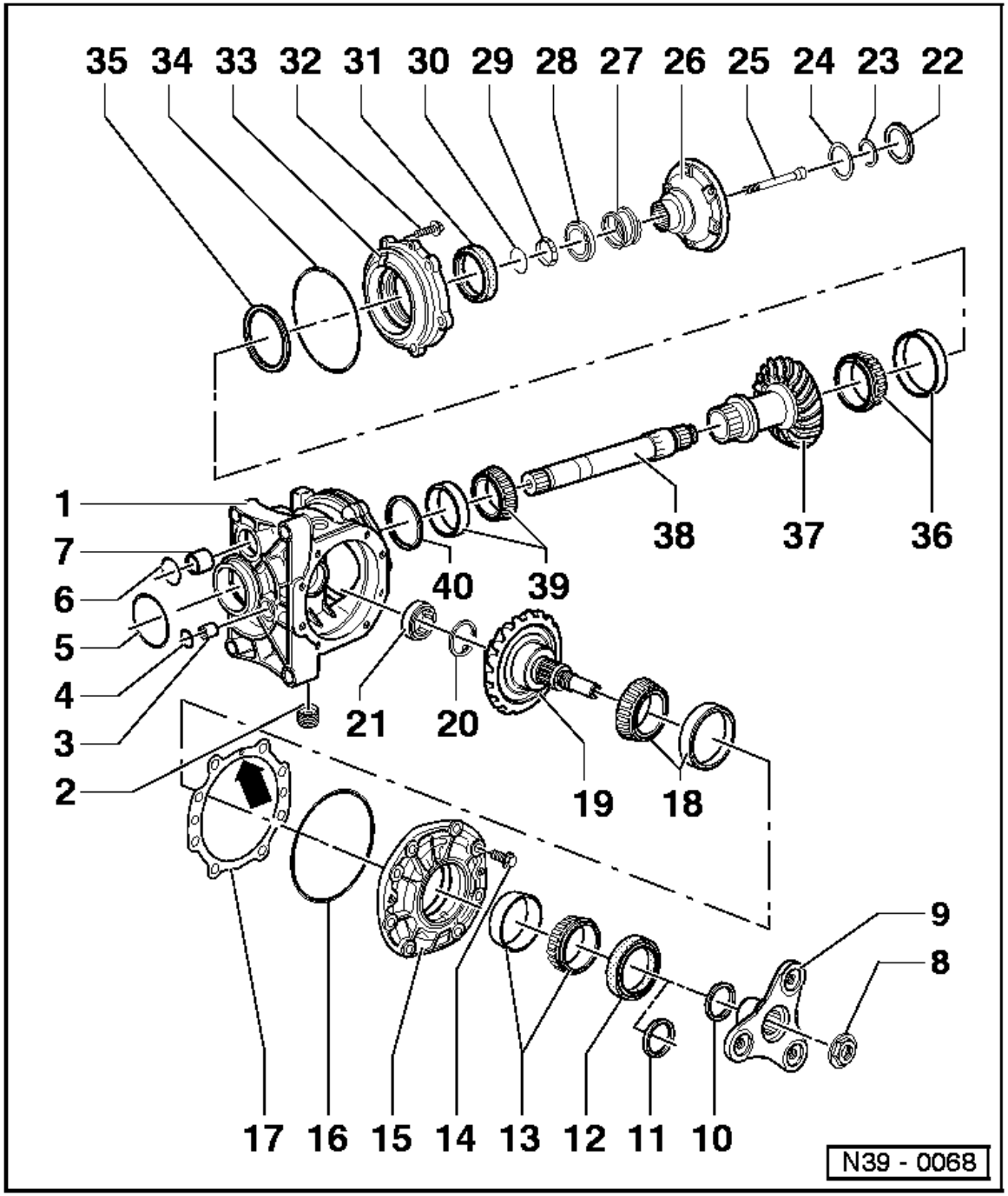

20 - Circlip
- ◆ Always renew

21 - Roller sleeve
- ◆ Pulling out => Page 39-42
- ◆ Pressing in => Page 39-44

22 - Sealing cap
- ◆ Destroyed during removal
- ◆ Always renew

23 - Circlip
- ◆ Always renew

24 - Dished washer
- ◆ Cone points towards circlip

25 - Cone head bolt, 25 Nm
- ◆ To threaded piece on differential output shaft

26 - Drive flange
- ◆ Pull out with output shaft (item 38)
- ◆ Pressing off => Page 39-50
- ◆ Pressing on => Page 39-50

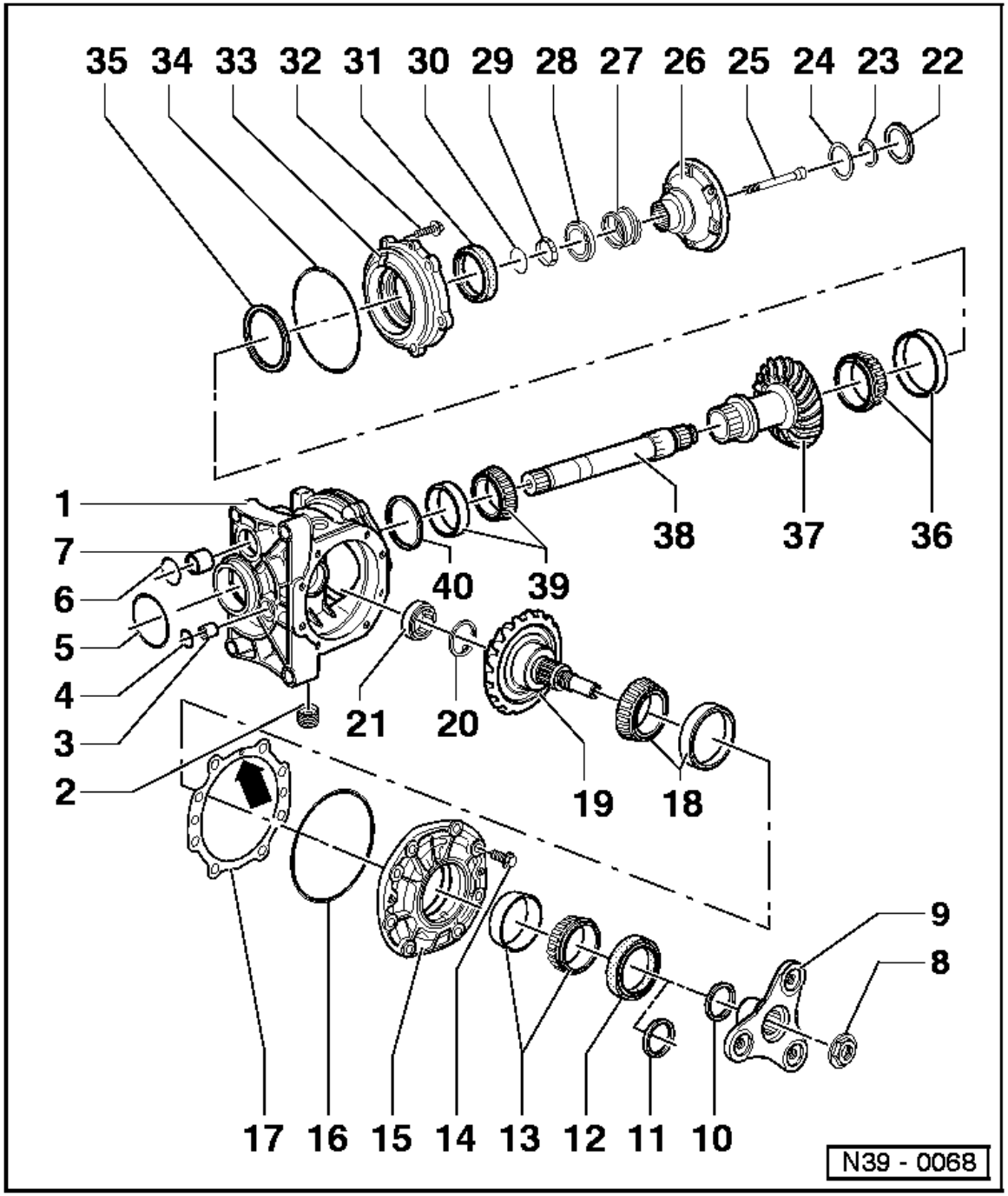

27 - Spring for drive flange
- ◆ Length - 25 mm
- ◆ Do not interchange with gearbox spring

28 - Thrust washer
- ◆ Installation position:
  Shoulder towards spring, tongue to tapered ring

29 - Tapered ring
- ◆ With grooves to secure thrust washer
- ◆ Installation position:
  Chamfer towards bevel box

30 - Circlip
- ◆ Holds the tapered ring, thrust washer and spring in position when removing the output shaft/drive flange

31 - Oil seal
- ◆ Lever out with lever
- ◆ Drive in onto stop with drive sleeve 3158
  => Page 39-4
- ◆ Replacing with gearbox installed => Page 39-3

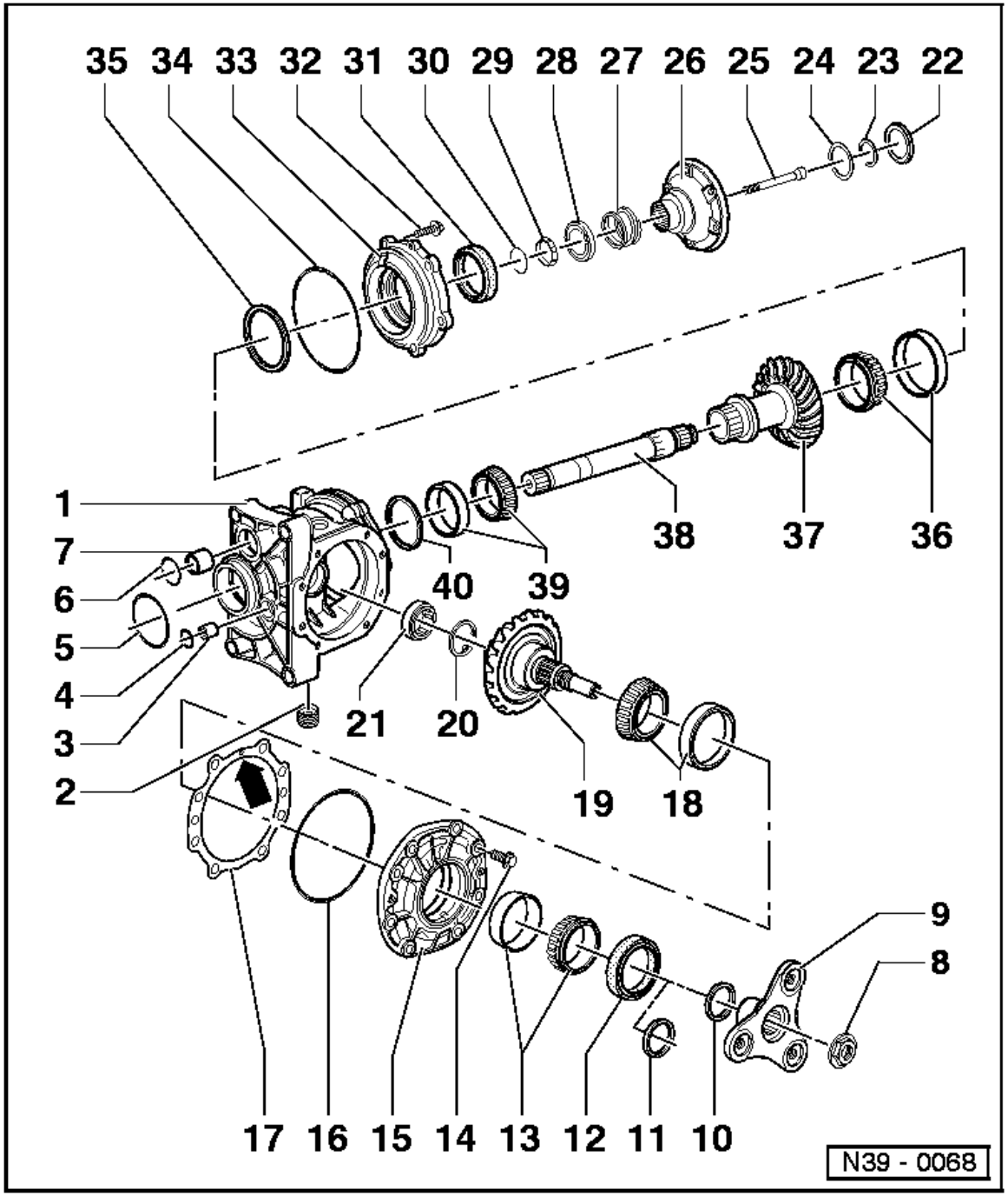

32 - Bolt, 25 Nm

33 - Cover plate[1])
- ◆ Removing => Page 39-40
- ◆ Do not cant when installing, tighten securing bolts in diagonal sequence and in stages

34 - O-ring
- ◆ Always renew
- ◆ Must lie in groove

35 - Shim S1
- ◆ Note thickness
- ◆ Adjustment overview => Page 39-54

36 - Large taper roller bearing to support bevel gear[1])

Inner race:
- ◆ Pulling off => Page 39-41
- ◆ Pressing on => Page 39-45

Outer race:
- ◆ Pressing out => Page 39-40
- ◆ Pressing in => Page 39-46

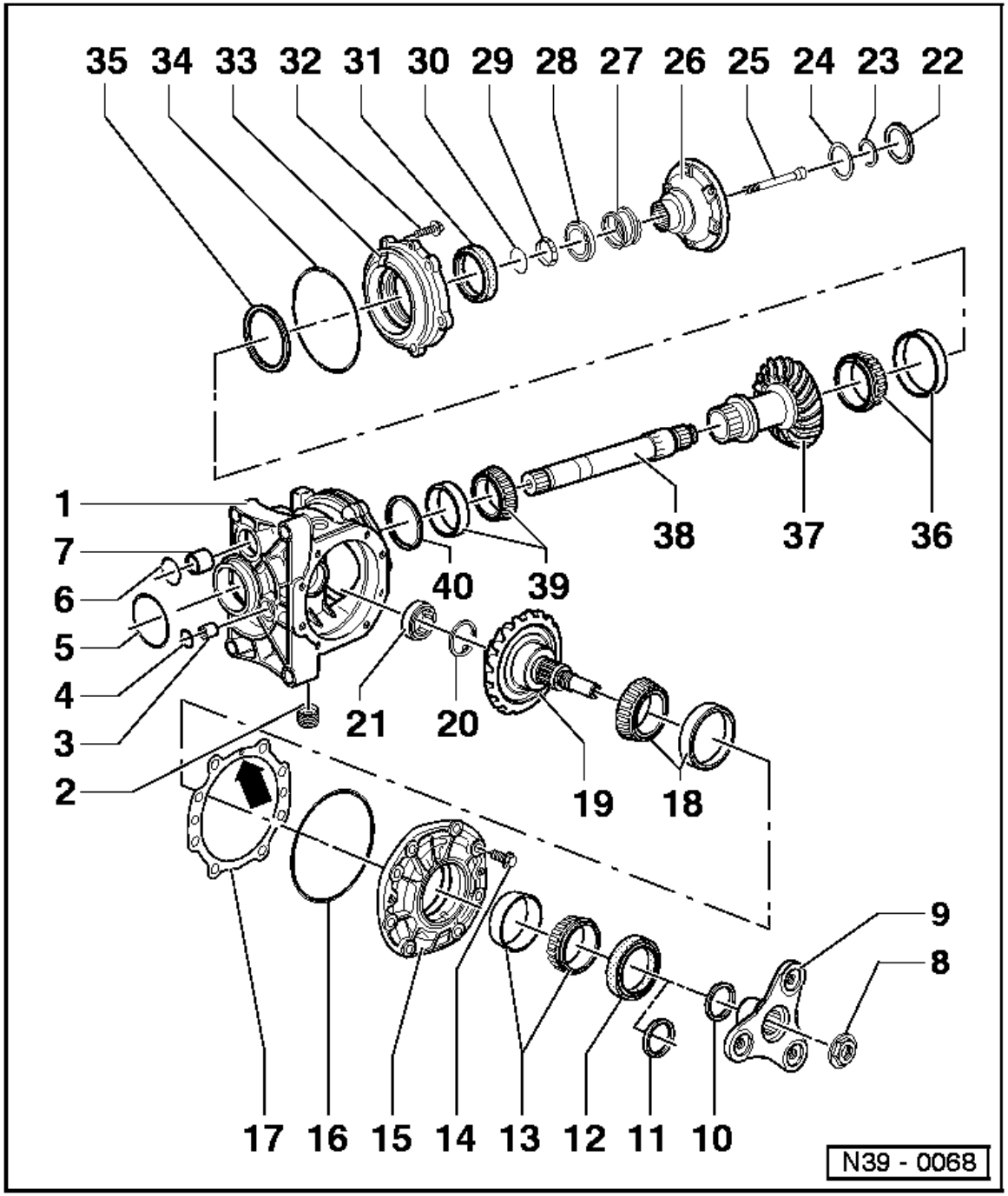

37 - Bevel gear with input shaft[1])

- ◆ Is paired to shaft bevel gear (item19)
- ◆ Cannot be pressed off input shaft
- ◆ Adjusting => Page 39-70
- ◆ Allocate according to gearbox code letters using parts catalogue => Page 00-3

38 - Output shaft

- ◆ Pull out of bevel gear housing together with drive flange (item 26)
- ◆ Pressing drive flange off and on => Page 39-50

39 - Small taper roller bearing to support bevel gear[1])

Inner race:

- ◆ Pressing off => Page 39-41
- ◆ Pressing on => Page 39-45

Outer race:

- ◆ Pressing out => Page 39-42
- ◆ Pressing in => Page 39-44

40 - Shim S2

- ◆ Note thickness
- ◆ Adjustment overview => Page 39-54