Rear axle housing has been removed from bevel gear housing => Page 39-125.

- Remove freewheel lock (=> Page 39-143, illustration N39-0051) as well as the switch mechanism for the freewheel lock (=> Page 39-143, illustration V39-1007) from the rear axle housing.

- Lever out right-hand drive flange sealing cap, to do this pierce centre of cap with a screwdriver.

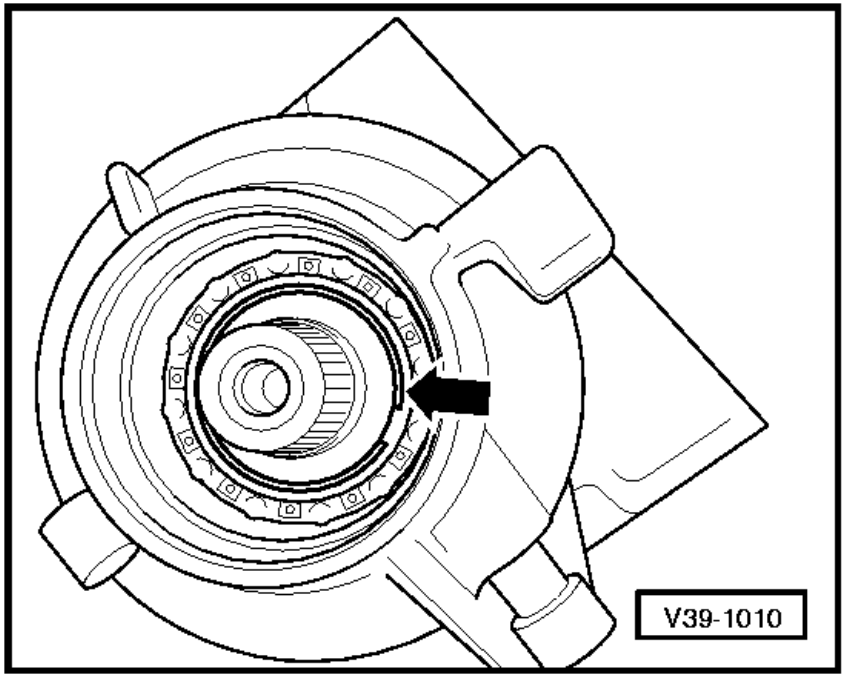

- Remove circlip and dished washer.

- Pull right-hand drive flange off with VW 391.

- Pull seal out with extractor lever VW 681.

⇦ - Remove circlip (arrow) for differential/rear axle housing bearing.

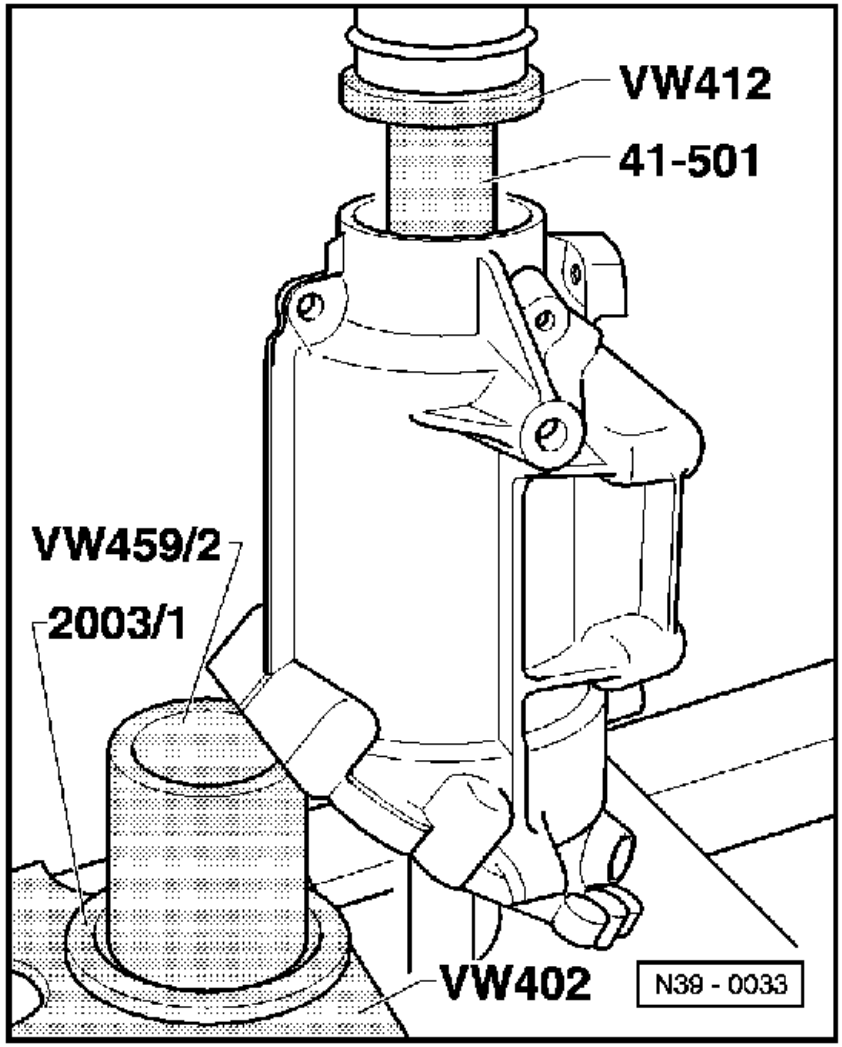

⇦ - Pressing differential complete with freewheel out.

- Lever bearing/differential circlip out of rear axle housing with a screwdriver.

- Remove and install bearing for differential as follows:

	Press disc
- driving out	VW 512
- pressing in	VW 510

- Insert bearing/differential circlip into rear axle housing by hand.

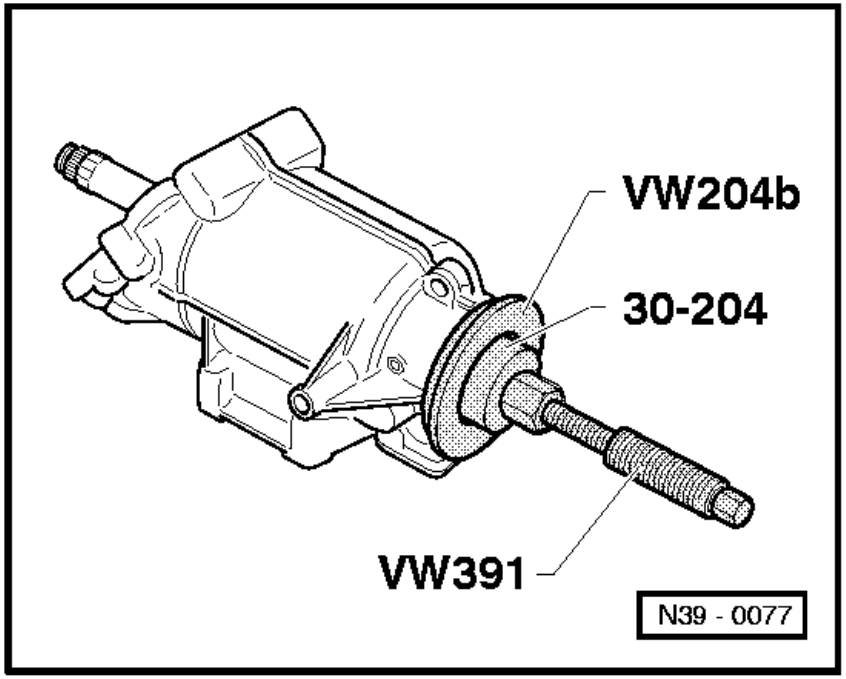

⇦ - Pulling differential complete with freewheel in.

- Secure with circlip => Page 39-140.