Removing

- With the ignition switched off disconnect the battery earth strap.

Note:

Note radio coding for vehicles with coded radio.

- Remove radiator cover.

⇦ - Remove front pipe -A- and rear pipe -B- for ventilating the propshaft bearing from fan (arrow 1), ABS unit (arrow 2) and from heat shield.

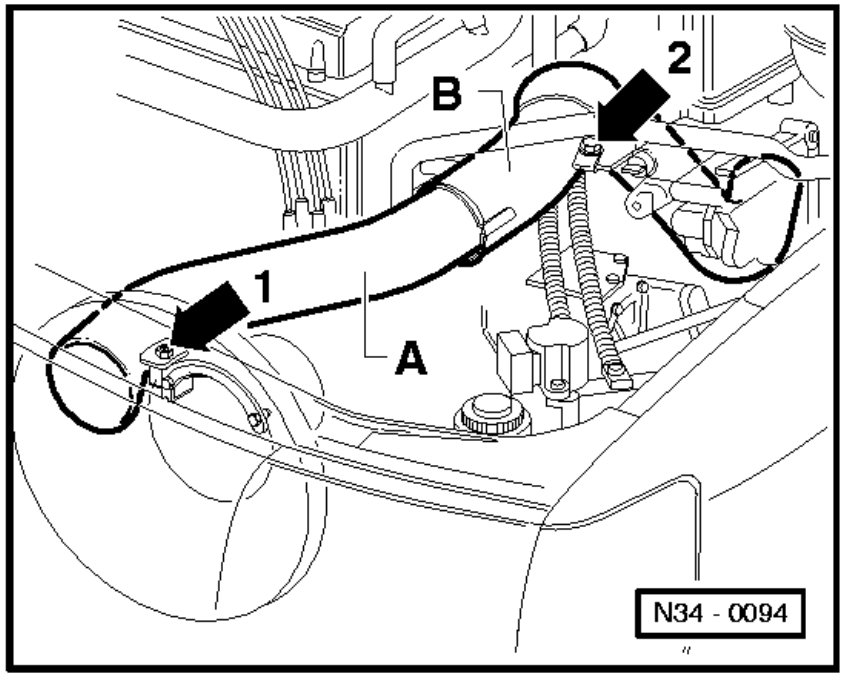

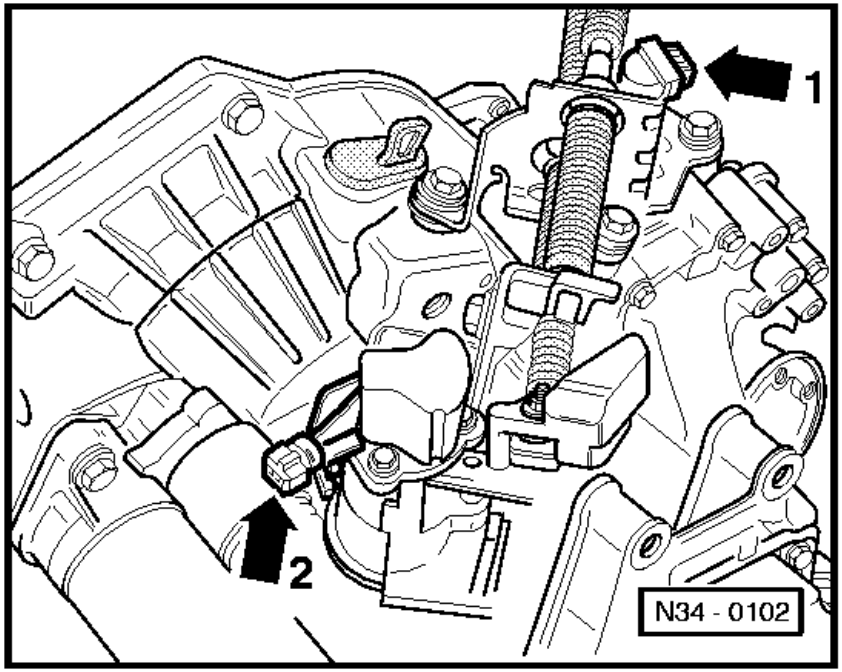

⇦ - Pull connector off sender (arrow 1).

- Pull off reverse light connector (arrow 2). Disconnect all other electrical connections and earth wires from gearbox and from the engine/gearbox securing bolts.

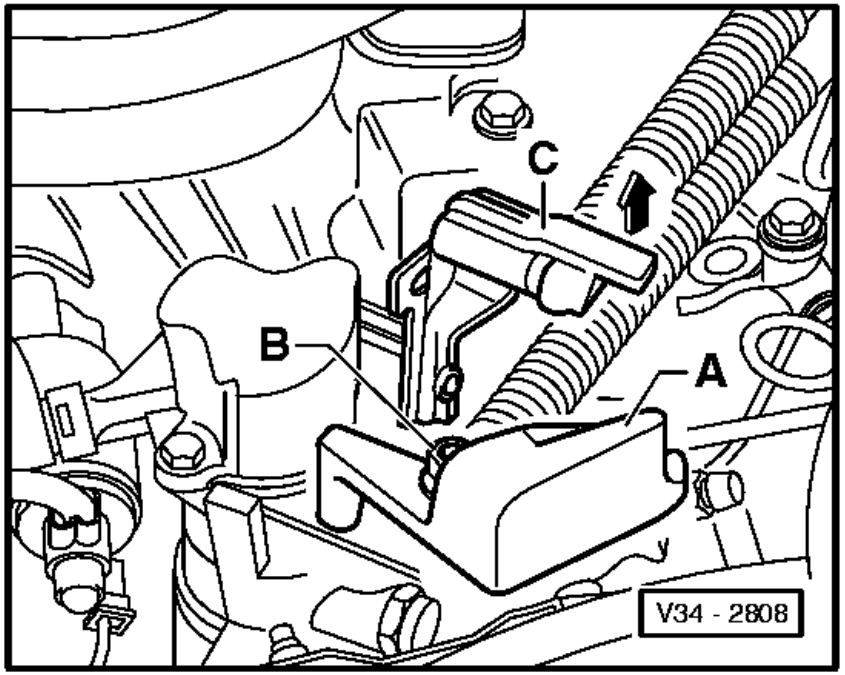

⇦ - Remove balance weight -A- and gear selector cable -B- from gear selector lever.

- Pull gate selector cable off actuating arm/relay lever -C- to do this lift lug in direction of arrow.

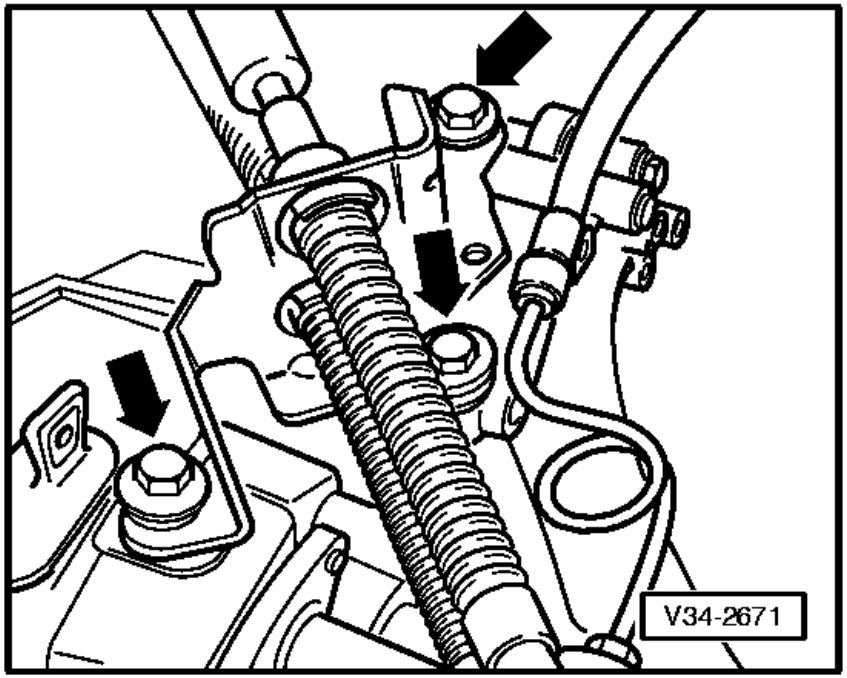

⇦ - Remove cable support bracket from gearbox (arrows) and tie up, first unclip hose on cable support bracket if necessary.

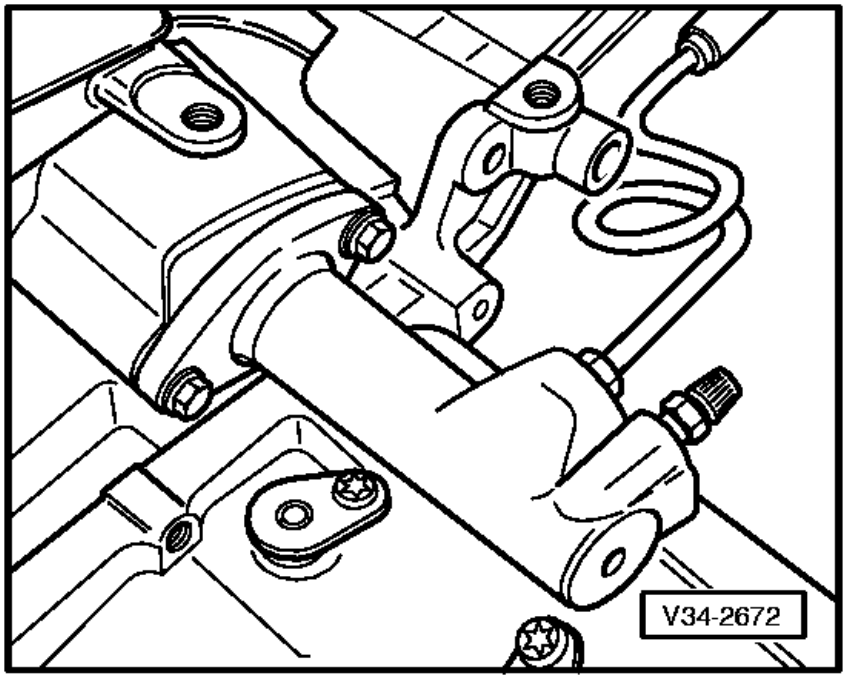

⇦ - Remove slave cylinder place to side and secure with wire, do not disconnect pipes.
Note:

Do not depress clutch pedal.

On vehicles with mechanical speedometer:

- Disconnect speedometer drive cable from gearbox with key 3016.

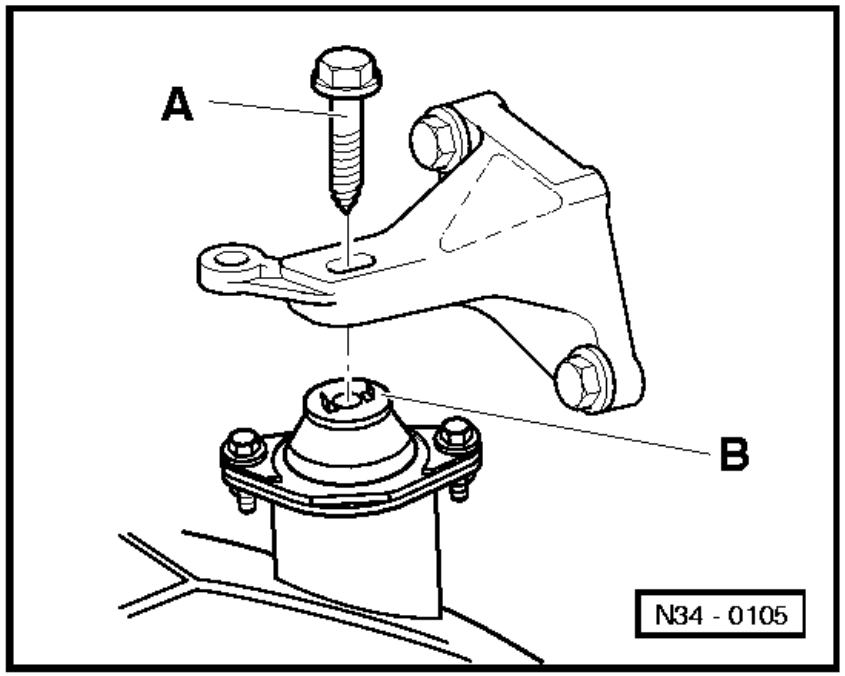

- Remove upper engine/gearbox securing bolts.

- Remove coolant system expansion reservoir and lay to one side. Do not open coolant system.

⇦ - Remove hexagon bolt -A- from left-hand gearbox assembly mounting -B-.

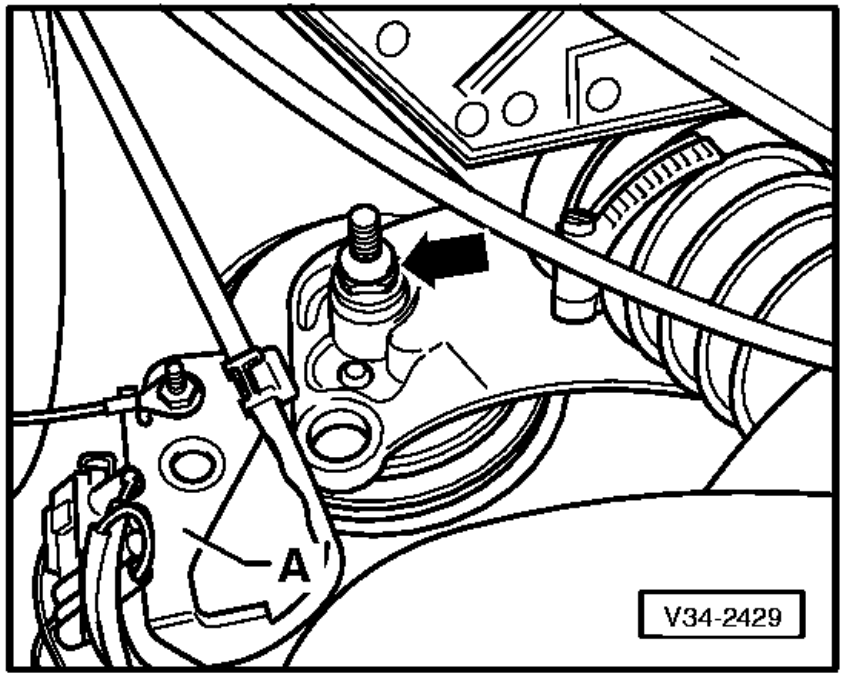

- Remove suction hose and place to side.

⇦ - Remove bolt (arrow) on right-hand engine console. First remove connector mounting plate -A-.

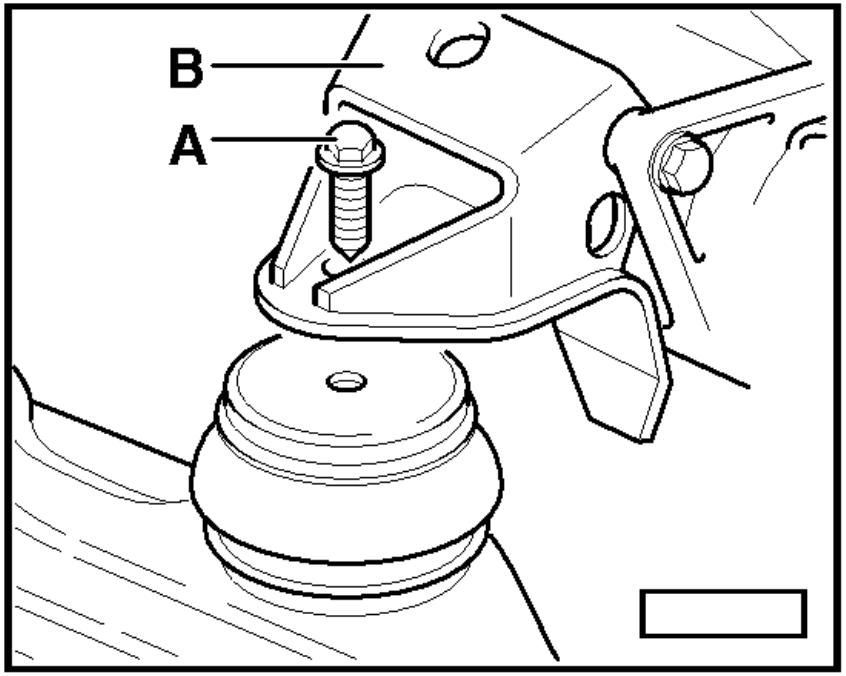

- Remove fan with cover and carrier plate.

- If fitted remove electrical connector securing plate from front console.

⇦ - Remove bolt -A- for console -B- .

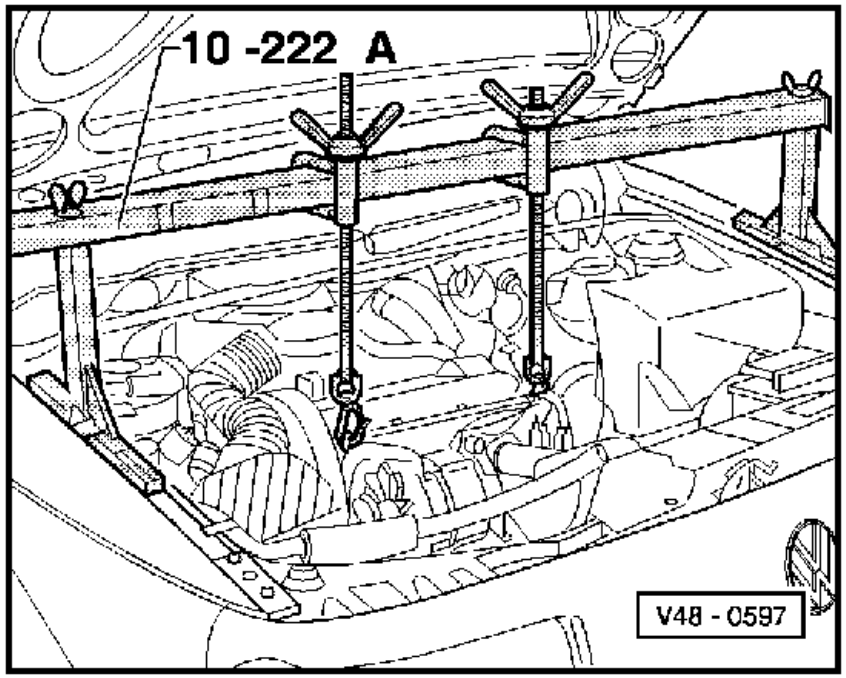

⇦ - Fit support bar 10-222A together with legs 10-222 A/1.

- Take weight of engine/gearbox assembly on the spindles.

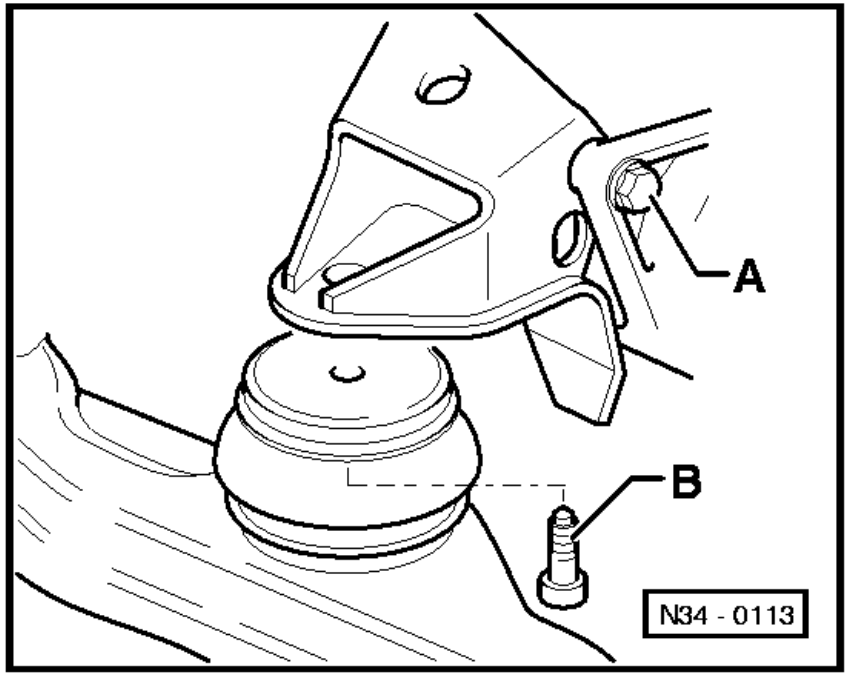

- Remove starter.
=> Repair group 27; Removing and installing starter.=>

- Remove power assisted steering pipe bracket from gearbox.

- Remove front console (bolt -A-).

⇦ - Remove front engine mounting (bolt -B-).

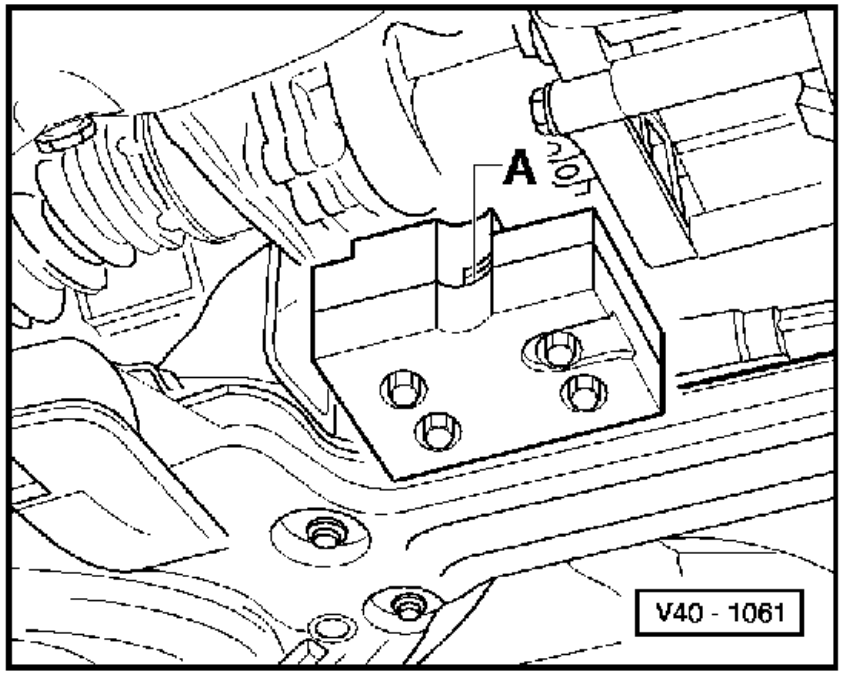

⇦ - Remove vibration damper -A- from sub-frame. Mark installation position.

- Separate exhaust system behind front exhaust pipe.
=> Repair group 26; Removing and installing parts of exhaust system, four wheel drive.=>

- Secure catalyst in lowered position.

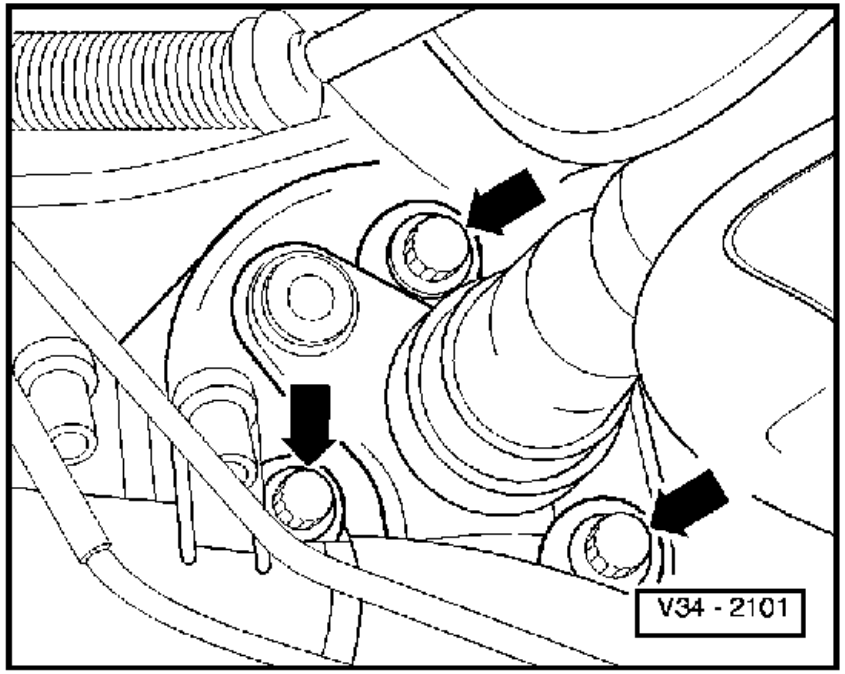

- Mark position of propshaft with flexible coupling to bevel box flange.

⇦ - Disconnect propshaft flexible coupling from bevel box flange (arrows).

- Push propshaft back onto stop.

Note:

When removing and installing the gearbox do not damage the seal in the propshaft flange.

- Disconnect drive shaft from gearbox.

- Remove air deflector from right-hand wishbone.

=> Running gear; Repair group 40=>

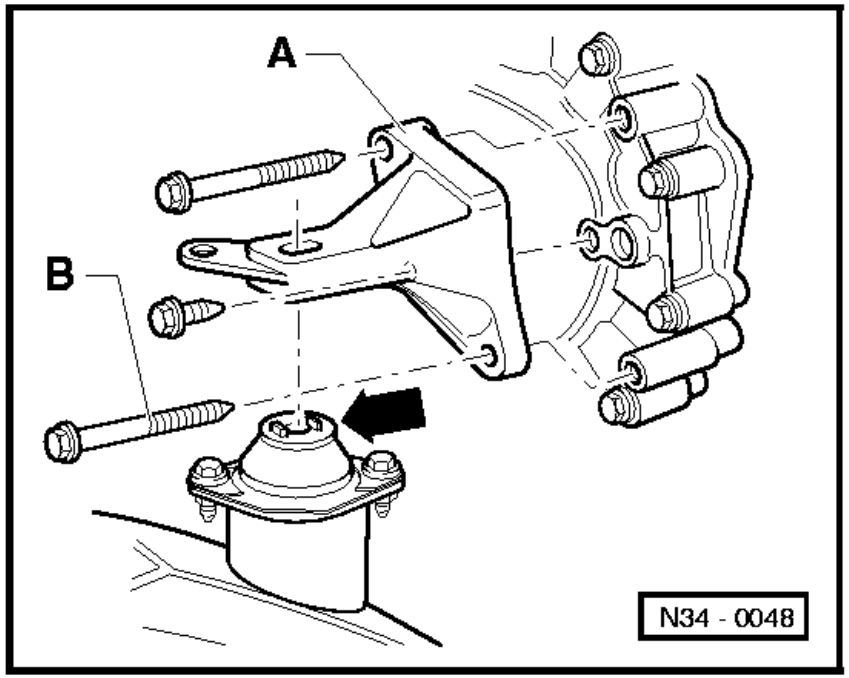

- Tie-up right-hand drive shaft forwards on wishbone.

- Tie-up left-hand drive shaft as high as possible,

⇦ - Removing gearbox console -A- from gearbox.

- Push engine/gearbox assembly forwards (2nd mechanic required) and remove lower gearbox console securing bolt -B-.

Note:

Do not damage P.A.S. pipe when moving engine/gearbox assembly.

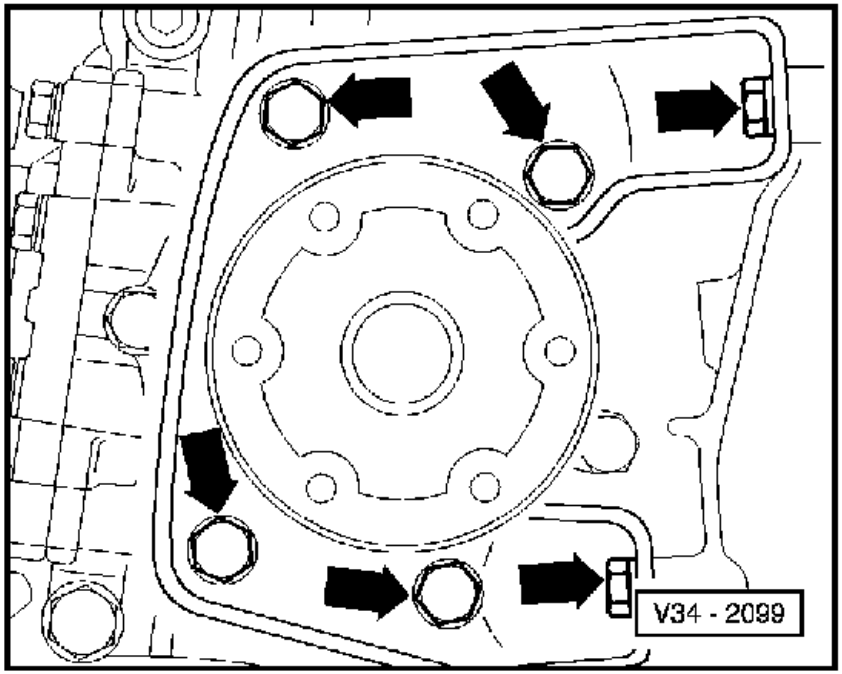

⇦ - Remove bevel box carrier from engine and bevel box (arrows).

- Place drip tray underneath.

- Remove cap by piercing cap centre with a screwdriver and levering out.

- Remove drive flange counter sunk head bolt with V.A.G 1669 or 6 mm socket insert (commercially available) and counter hold against turning with a drift.

- Pull drive shaft with drive flange out carefully and note spring behind drive flange.

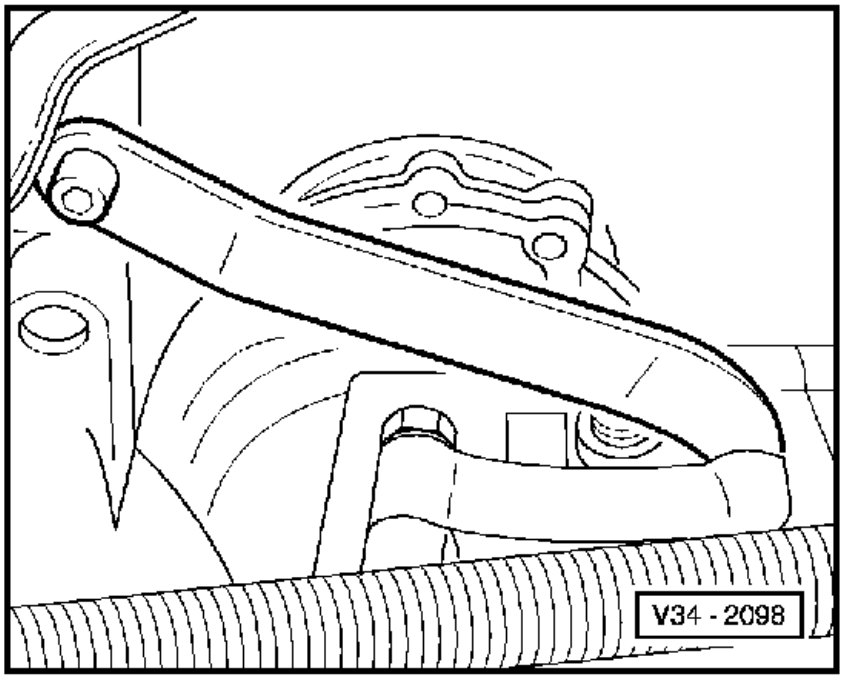

⇦ - Remove bevel box/engine support.

- Remove large clutch cover plate.

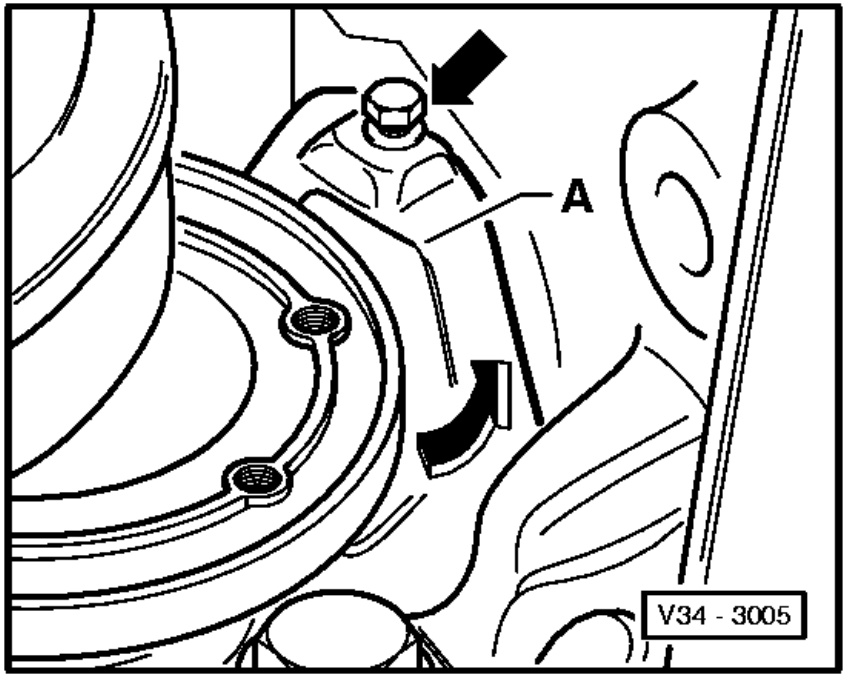

⇦ - Remove small flywheel cover plate -A- located behind bevel box (arrows).

- Remove ribbed V-belt cover from body, front right.

- Push engine/gearbox assembly as far as possible to the right.
  Thereby ensuring sufficient clearance between P.A.S. pipes and drive unit.
Removal position:
Power unit crankshaft belt pulley lies almost against right-hand longitudinal member.

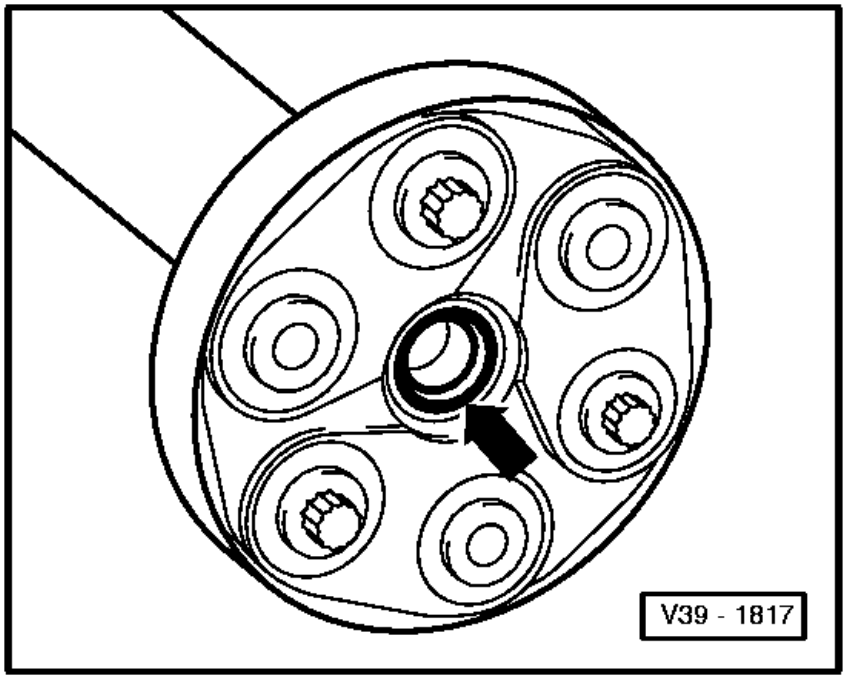

- Remove bevel box/gearbox securing bolts.

- Press bevel box off gearbox.
Note:

⇦ *When removing and installing the bevel box do not damage the seal (arrow) in the propshaft flange.*

- Take bevel box out downwards between assembly carrier and sump, to do this push engine/gearbox assembly forwards (2nd mechanic).

- Assemble gearbox jack V.A.G 1383A with gearbox support 3282, adjustment plate 3282/8 for "02A" gearbox and support elements as follows:

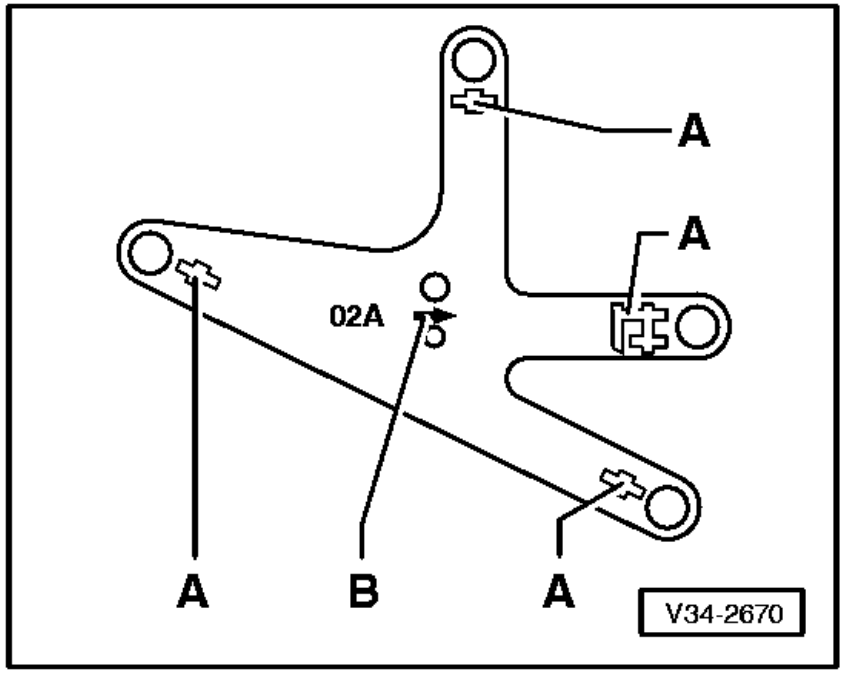

- Place adjustment plate 3282/8 on gearbox support 3282. (Adjustment plate only fits in one position).

- Align arms of gearbox support according to holes in adjustment plate.

⇦ - Bolt on support elements -A-, as illustrated on adjustment plate.

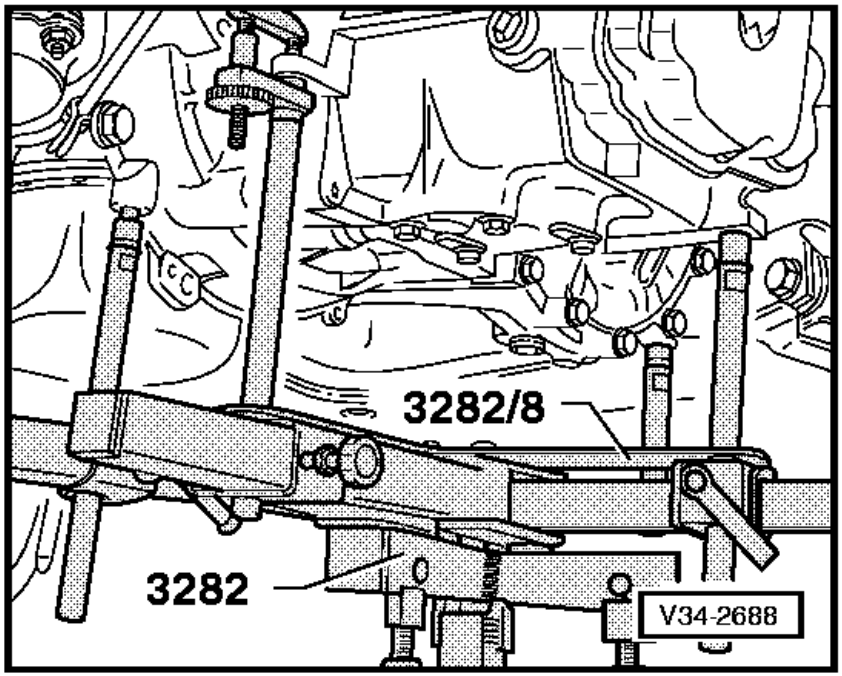

⇦ - Place gearbox jack with gearbox support under vehicle, arrow symbol -B-(=>Illustration V34-2670) on adjustment plate points to front of vehicle.

- Align adjustment plate parallel to gearbox and lock safety supports on gearbox.

- Remove lower engine/gearbox securing bolt (=> Page 34-38, illustration V34-2743, item 2).

- Press gearbox off engine and lower carefully while pushing engine/gearbox assembly forward slightly and constantly correct the position via the gearbox jack spindles.

Notes:

◆ When lowering do not damage P.A.S. pipes.

◆ When lowering guide gearbox around engine carrier.

◆ When swinging out ensure sufficient clearance between gearbox connecting piece and clutch as well as between flange shaft or gearbox housing and assembly carrier.

◆ If the vehicle is to be moved with the propshaft detached then secure the propshaft to prevent damage.

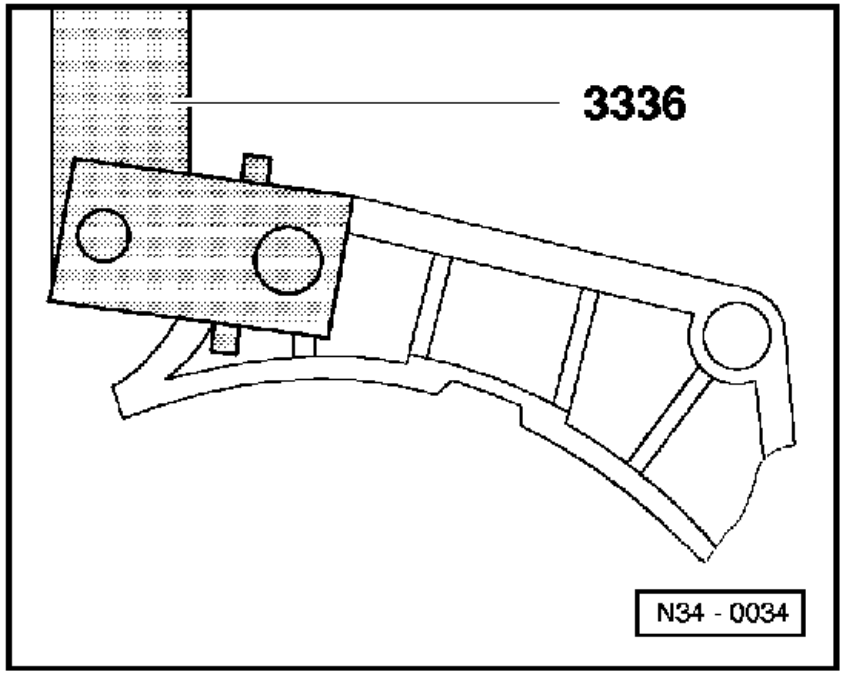

⇦ - Bolt gearbox lifting device 3336 to clutch housing.

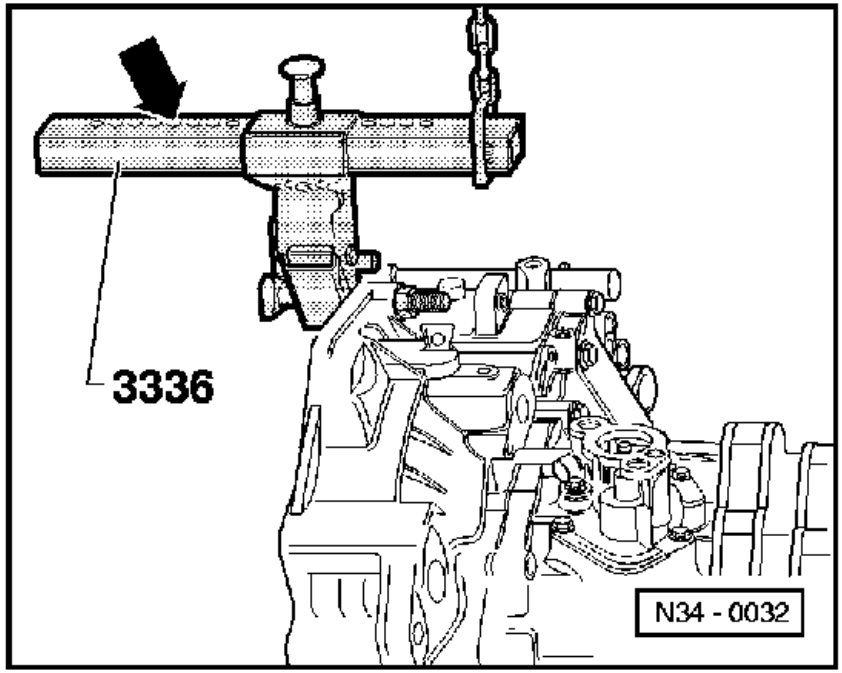

⇦ - Set support arm on sliding piece with locking pin (arrow).
No. of holes visible = 5

- Take gearbox out with workshop crane and gearbox lifting device 3336

- Place gearbox down.

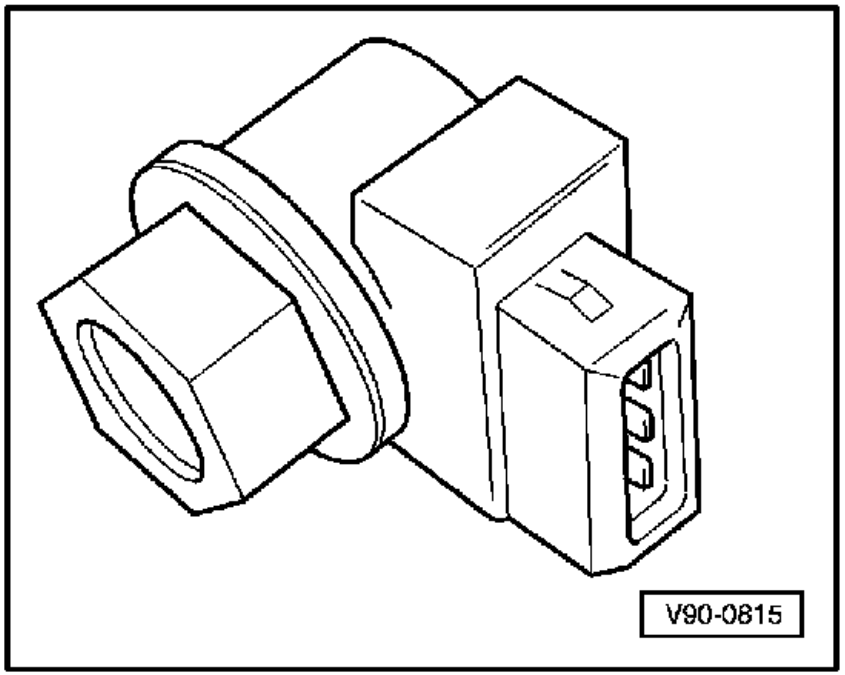

Installing gearbox is carried out in the reverse sequence. When installing gearbox ensure engine/gearbox mountings are installed stress-free.

=> Repair group 10; removing and installing engine.=>

Notes:

⇦ ◆ When replacing gearbox, always transfer the senders for speedometer (illustration), gear selector and relay lever to new assembly if available.

◆ Clean input shaft splines and lightly grease with G000 100 grease.

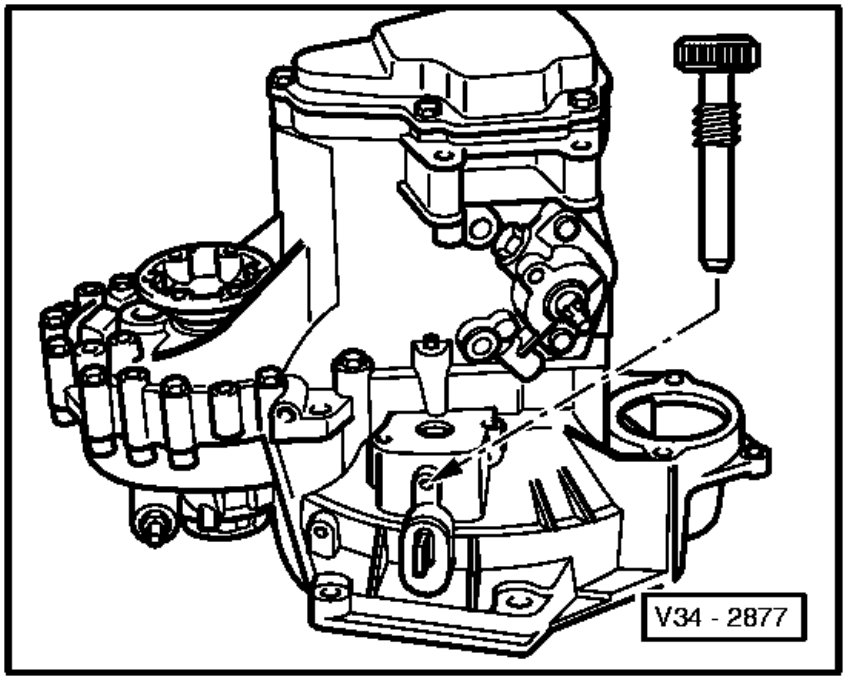

◆ Check whether dowel sleeves for aligning engine/gearbox are fitted in cylinder block, install if necessary.

◆ When replacing the gearbox ensure that the intermediate plate is correctly positioned.

⇦ ◆ Before installing gearbox press clutch release lever towards gearbox housing and secure with assembly pin, assembly bolt or M 8 x 35 bolt. Remove after gearbox has been installed. The hole will then be sealed by the 3rd cable support bracket securing bolt or plugged.

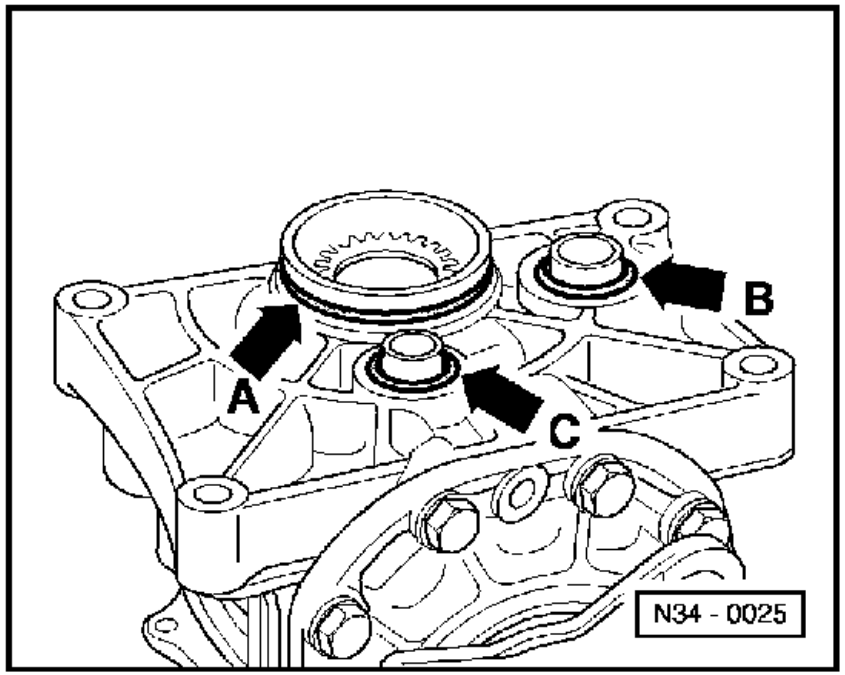

◆ Build bevel box on as follows:

⇦ - Always replace sealing ring to seal bevel box/gearbox (arrow A) and sealing rings to seals sleeves for the oil supply system (arrow B and C), lightly coat with oil.

- Push bevel box completely onto gearbox, thereby ensuring that the bevel box input shaft teeth are guided centrally onto the differential connecting piece.

- If the teeth position and the central guide are correctly set then the bevel box will slide onto the stop against the gearbox.

- Do not pull the bevel box onto the gearbox using securing bolts otherwise the bevel box will cant and the securing eyes can break off.

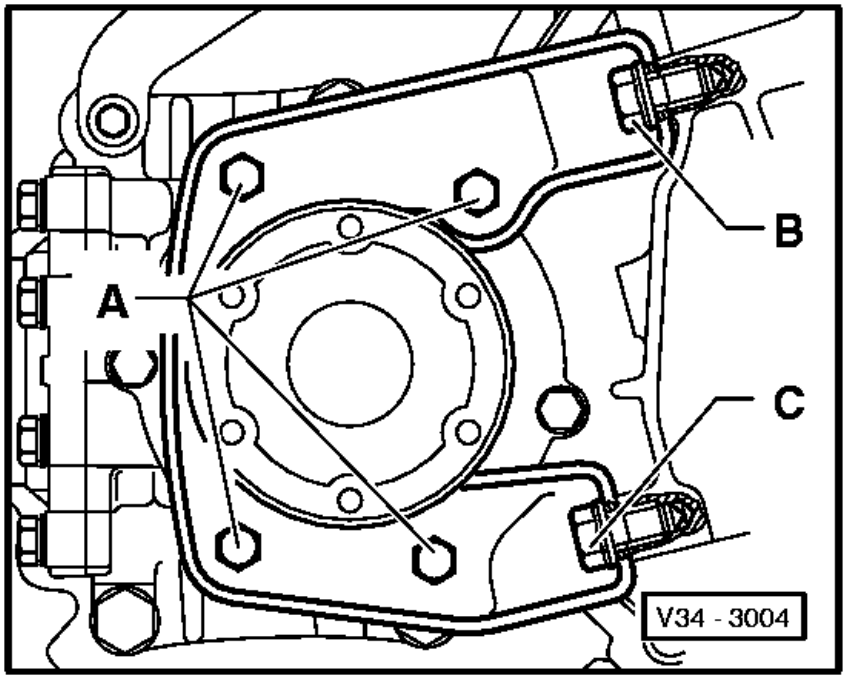

⇦ ◆ When installing the gearbox carrier note following assembly sequence:
- Tighten all bolts hand-tight.
- Tighten bolts -A- to torque setting.
- Tighten bolts -B- and -C- to torque setting.

◆ When removing and installing do not damage seals in propshaft flanges.

◆ Renew propshaft if damaged.

◆ Push propshaft horizontally onto guide pins.

◆ Replacing drive shaft seal.
=> Running gear; Repair group 40; Servicing drive shaft=>

◆ Installing front exhaust pipe to catalyst

=> Repair group 26; Removing and installing parts of exhaust system, four wheel drive=>

◆ Installing starter/wiring.

=> Repair group 27; Removing and installing starter.=>

◆ Checking oil in gearbox with bevel box =>Page 34-79.

◆ Adjust gear change linkage => Page 34-19.

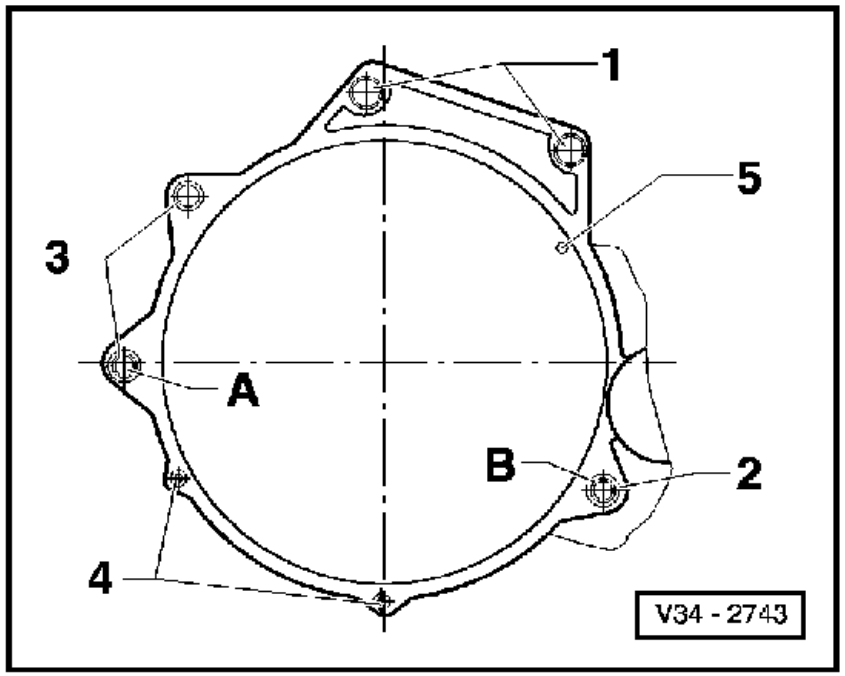

⇦ Gearbox to engine

Pos.	Bolt	Qty.	Nm
1	M 12 x 55	2	80
2	M 12 x 62	1	80
3[1])	M 10 x 160	2	60
4 [2])	M 7 x 12	2	10
5 [3])	M 6 x 8	1	10

[1])Also starter to gearbox

[2])Flywheel large cover plate

[3])Flywheel small cover plate

Pos. A + B - Dowel sleeves

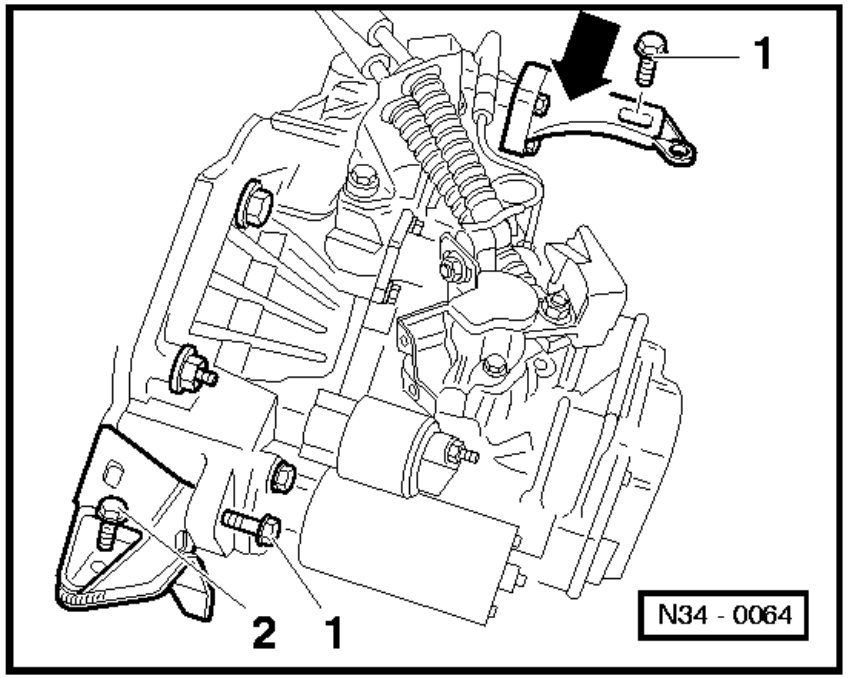

⇦ Assembly mountings

Pos.	Bolt	Qty.	Nm
1	M 10 x 45	2	55
2	M 10 x 30	1	55

Left gearbox console to gearbox (arrow)	25 Nm
Right-hand engine console to bonded rubber mounting	50 Nm
Front bonded rubber mounting to engine carrier (M10)	50 Nm

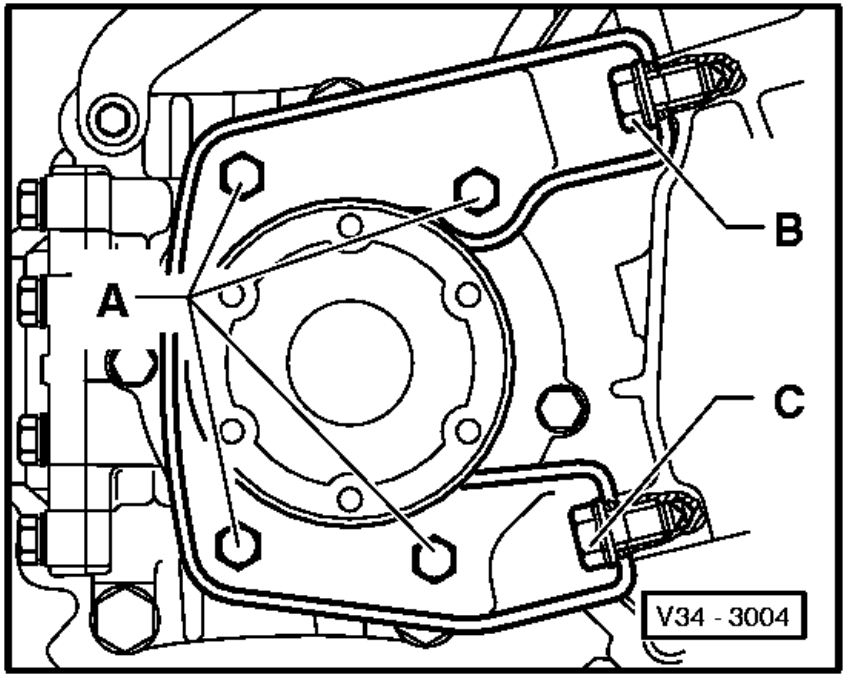

Bevel box to gearbox	40 Nm
Bevel box support to engine	40 Nm
Bevel box support to bevel box	40 Nm
For drive flange to gearbox (counter sunk head bolt)	25 Nm
⇦ Gearbox carrier to bevel box bolts -A-	25 Nm
Gearbox carrier to engine bolts -B- and -C-	40 Nm
Drive shaft to flange shaft/drive flange	45 Nm
Flexible coupling to bevel box	45 Nm
Balance weight to sub-frame	30 Nm
Selector cable support bracket to gearbox	25 Nm
Selector cable bolt to gearbox selector lever	25 Nm
Balance weight to gearbox selector lever	25 Nm