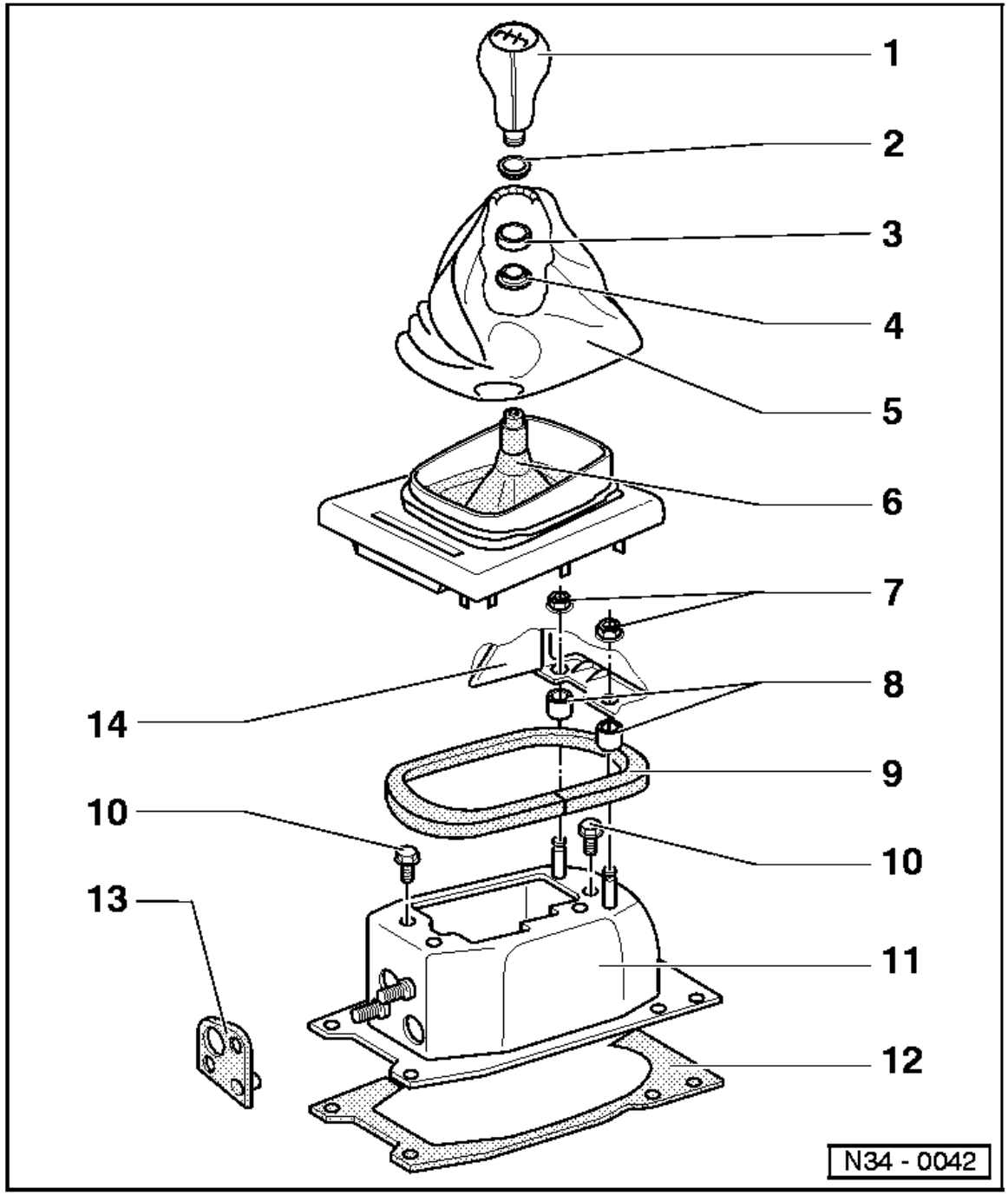

1 - Gear stick knob

2 - Gaiter collar

3 - Retaining collar

4 - Spring collar
- ◆ Removing => Fig.1
- ◆ Installing => Fig. 2

5 - Cover
- ◆ Pull off from frame
- ◆ Connect to gear stick knob before installing

6 - Rubber cover with frame
- ◆ Always remove and install together
- ◆ After installing fit gaiter (Item 5)

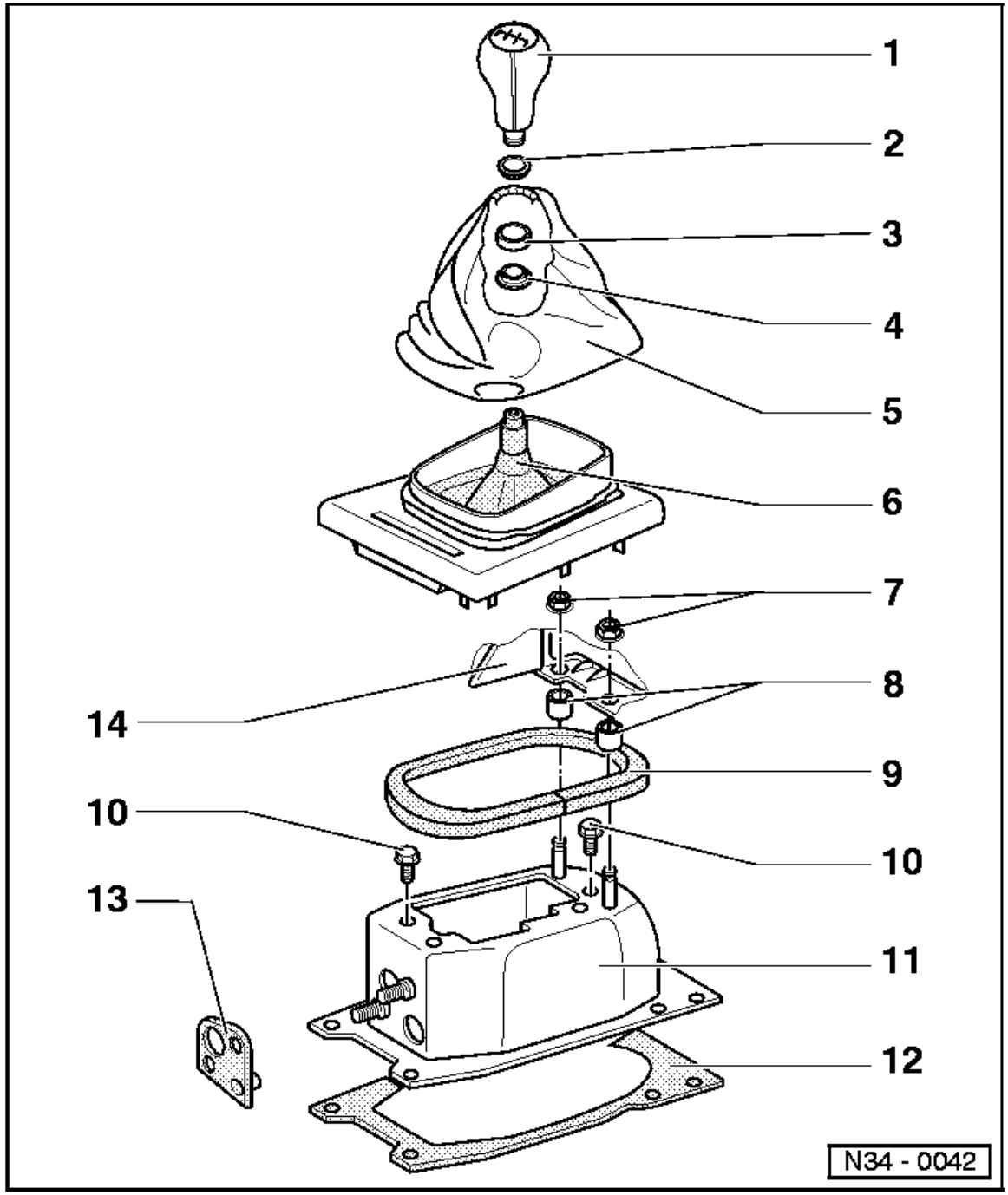

7 - Plastic nut
- ◆ Console to gear stick housing
- ◆ Remove before removing gear selector mechanism

8 - Spacer sleeve
- ◆ Between console and gear stick housing

9 - Gasket
- ◆ Between gear stick housing and floor
- ◆ Self-adhesive
- ◆ Bond to gear stick housing

10 - Hexagon bolt, 15 Nm
- ◆ For mounting plate to gear stick housing

11 - Gear stick housing

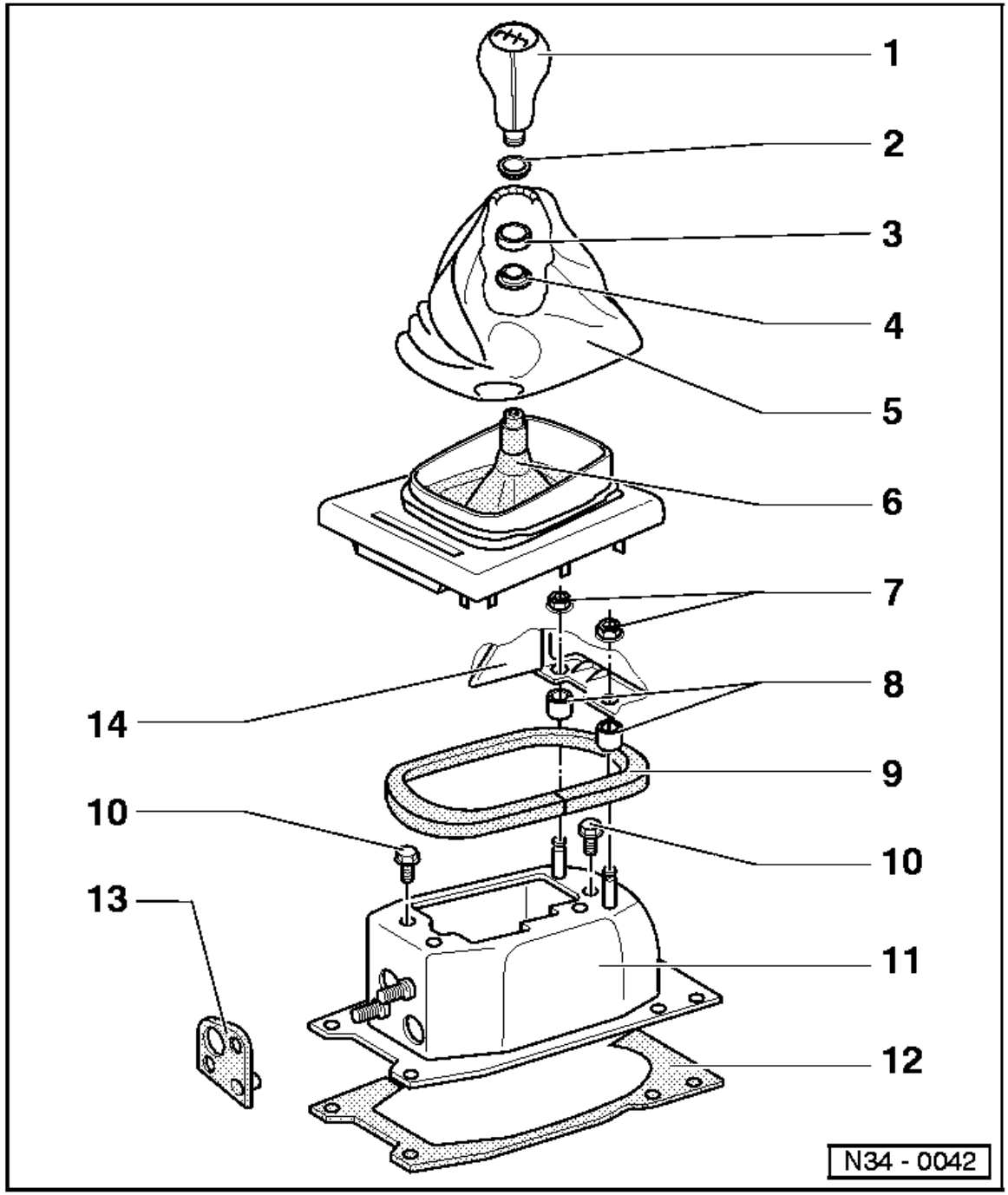

12 - Gasket
- ◆ Self-adhesive
- ◆ Bond underneath gear stick housing

13 - Gasket
- ◆ Between selector cables and gear stick housing

14 - Central console

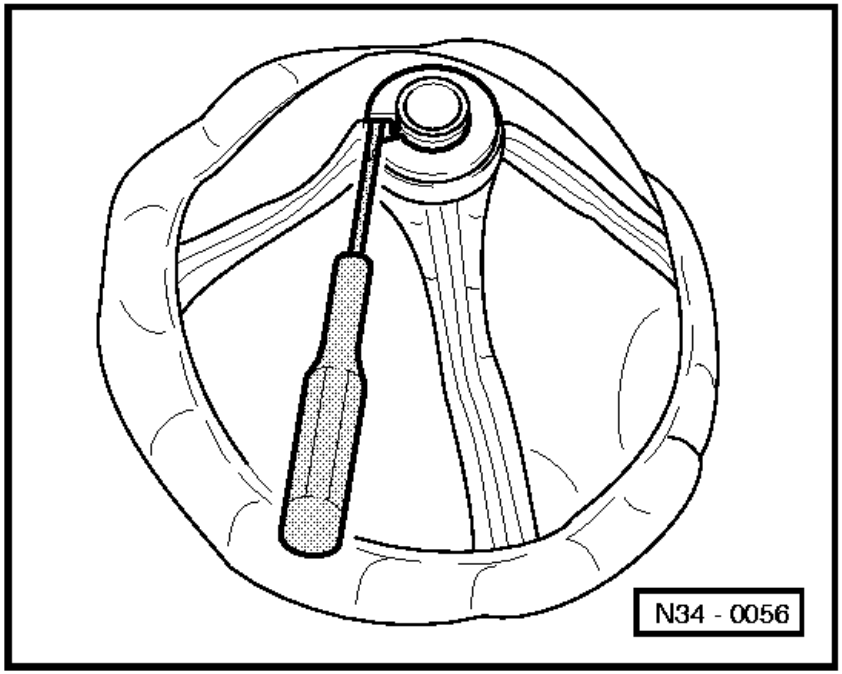

- Turn cover inside out.

- Lever off spring collar with a screwdriver.

- Take retaining collar off.

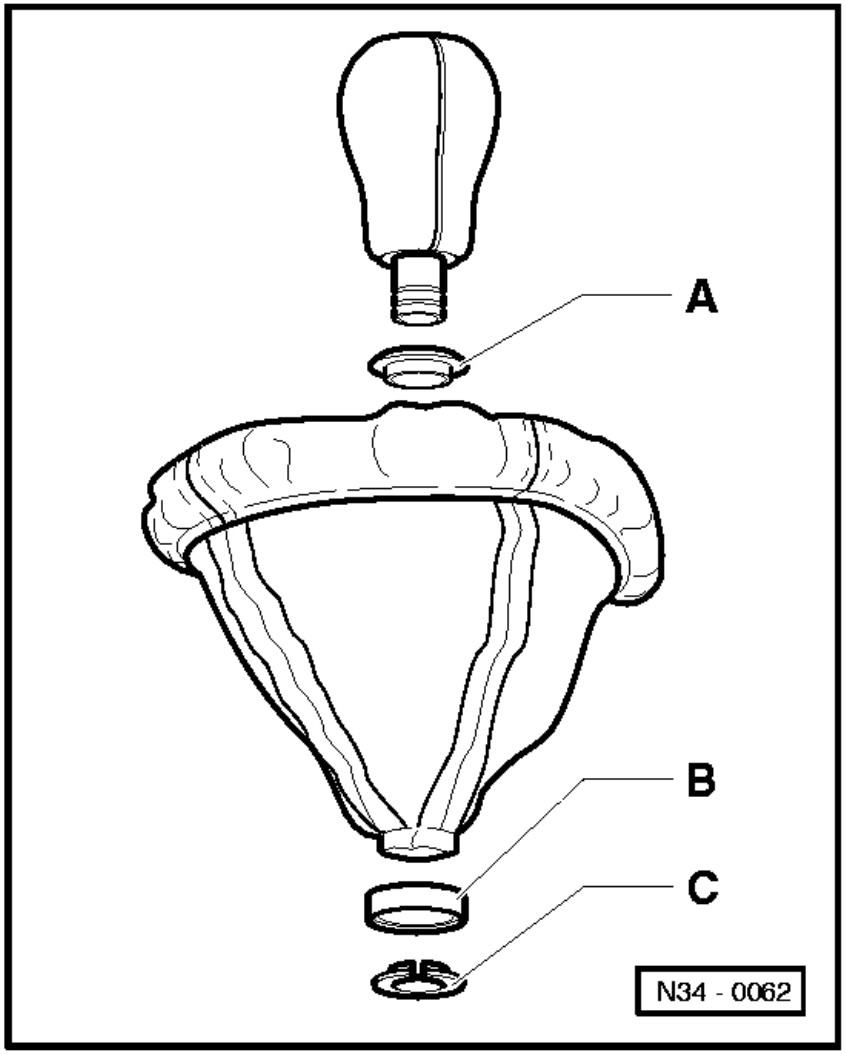

⇦ **Fig.2Installing gear stick gaiter**

- Turn cover inside out.

- Insert gaiter collar -A- and clamp gaiter with retaining collar -B-.

Installation position: Retaining collar shoulder towards spring collar.

- Fit gear stick knob and clip spring collar -C- into gear stick knob inner groove.

- Install gaiter over rubber cover to frame.