Re-adjustment of the bevel gear is required if

◆ Final drive housing

◆ Cover

◆ Bevel gear with input shaft taper roller bearing

or the

◆ Gear set

are renewed.

Adjustment overview =>Page 39-54

Adjusting bevel gear taper roller bearing preload (friction torque)

The shaft bevel gear is removed.

- Fit 1.2 mm shim (Part No.113 517 211 A) in small taper roller bearing outer race seat (S2side).

- Press outer race in => Page 39-44

- Fit bevel gear with input shaft with taper roller bearing.

- Install cover with large taper roller bearing outer race but without O-ring, drive flange seal and without shim S1.

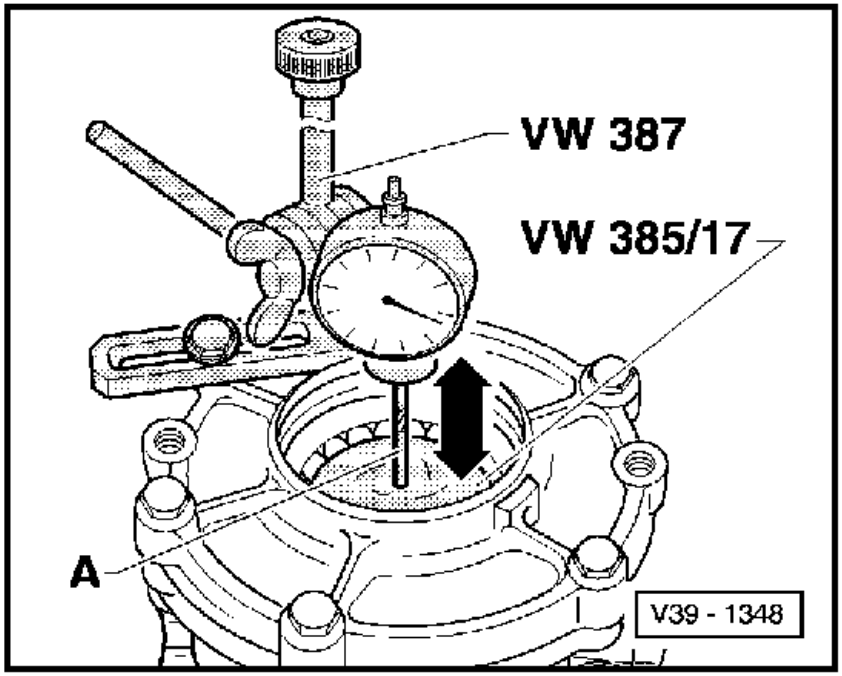

⇦ - Fit dial gauge (2 mm preload)
A - Gauge extension 30 mm

- Move bevel gear with input shaft up and down (direction of arrow)

- Read off play from dial gauge and determine Stotal.

Example:

	Shim	1.20 mm
+	Preload (constant)	0.30 mm
+	Play (read off dial gauge)	0.35 mm
Stotal =		1.85 mm

Fit Stotal instead of 1.20 mm thick shim and check bearing preload via friction torque.

Following friction torques are to be set:

new bearings	used bearings [1])
200 ... 250 Ncm	30 ... 50 Ncm

[1]) run for at least 50 km (30 miles)

Determining shim S2thickness (adjusting backlash)

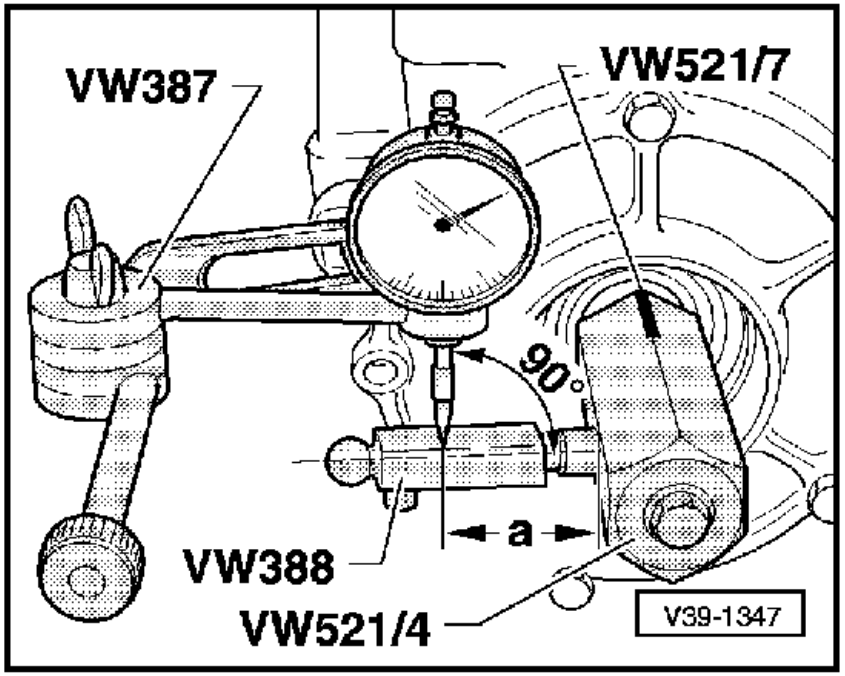

Bevel gear with input shaft with Stotalfitted to S2side (Example: 1.85 mm) installed. Friction torque for bevel gear with input shaft and shaft bevel gear bearings must be correct.

⇦ - Fit measuring tools.
  - Gauge extension approx. 25 mm long
  - Dimension "a" = 39 mm
  - Install measuring lever VW 388 so that the gauge extension is at right angles to measuring face.

- Turn bevel gear with input shaft in onto stop. Zero dial gauge, turn bevel gear with input shaft back and read off backlash. Note value.

- Loosen clamping sleeve locking screw and after turning bevel gear with input shaft through a further 90°, repeat complete measuring process a further 3 times. Add the four measured values together and calculate average backlash.

Calculating average backlash

Example:

	1st measurement	1.25 mm
+	2nd measurement	1.24 mm
+	3rd measurement	1.25 mm
+	4th measurement	1.26 mm
Total		5.00 mm

Average backlash = 5.00 mm /4
= 1.25 mm.

Note:

The relationship backlash to bevel gear with input shaft displacement is almost a ratio of 1:1. Therefore the calculated average backlash can be used directly for calculating S2.

Determining shim S2 thickness

S2	=	2E	Inserted shim (Stotal)	---	- 4 -
	-		average backlash		
	+		Lift (constant)		

Lift = 0.20 mm

Example:		
	Fitted shim	1.85 mm
-	average backlash	1.25 mm
		0.60 mm
+	Lift (constant)	0.20 mm
S2	=	0.80 mm

The following adjustment shims are available:

Size (mm)	Part No.
0.15	113 517 201A
0.20	113 517 202A
0.30	113 517 203A
0.40	113 517 204A
0.50	113 517 205A
0.60	113 517 206A
0.70	113 517 207A
0.80	113 517 208A
0.90	113 517 209A
1.00	113 517 210A
1.20	113 517 211A

- Install determined shim S2 instead of Stotal.

If the size of shim required is larger than those listed in the table, insert two shims totalling the correct figure.

- Different tolerances make it possible to select the exact thickness of shim(s) required.

- Press outer race in again and fit bevel gear with input shaft.

Determining shim S1thickness

S1 = Stotal - S2

Example:

S1 = 1.85 mm - 0.80 mm

S1 = 1.05 mm

The following adjustment shims are available:

Size (mm)	Part No.
0.70	02C 409 247
0.75	02C 409 247A
0.80	02C 409 247B
0.85	02C 409 247C
0.90	02C 409 247D
0.95	02C 409 247E
1.00	02C 409 247F
1.05	02C 409 247G
1.10	02C 409 247H
1.15	02C 409 247J
1.20	02C 409 247K
1.25	02C 409 247L
1.30	02C 409 247M
1.35	02C 409 247N

- Insert determined S1 shim.

If the size of shim required is larger than those listed in the table, insert two shims totalling the correct figure.

- Different tolerances make it possible to determine the exact thickness of shim(s) required.

- Press outer race in again.

- Fit cover.

Carry out control measurement - measuring backlash

- It must be 0.15...0.25 mm.