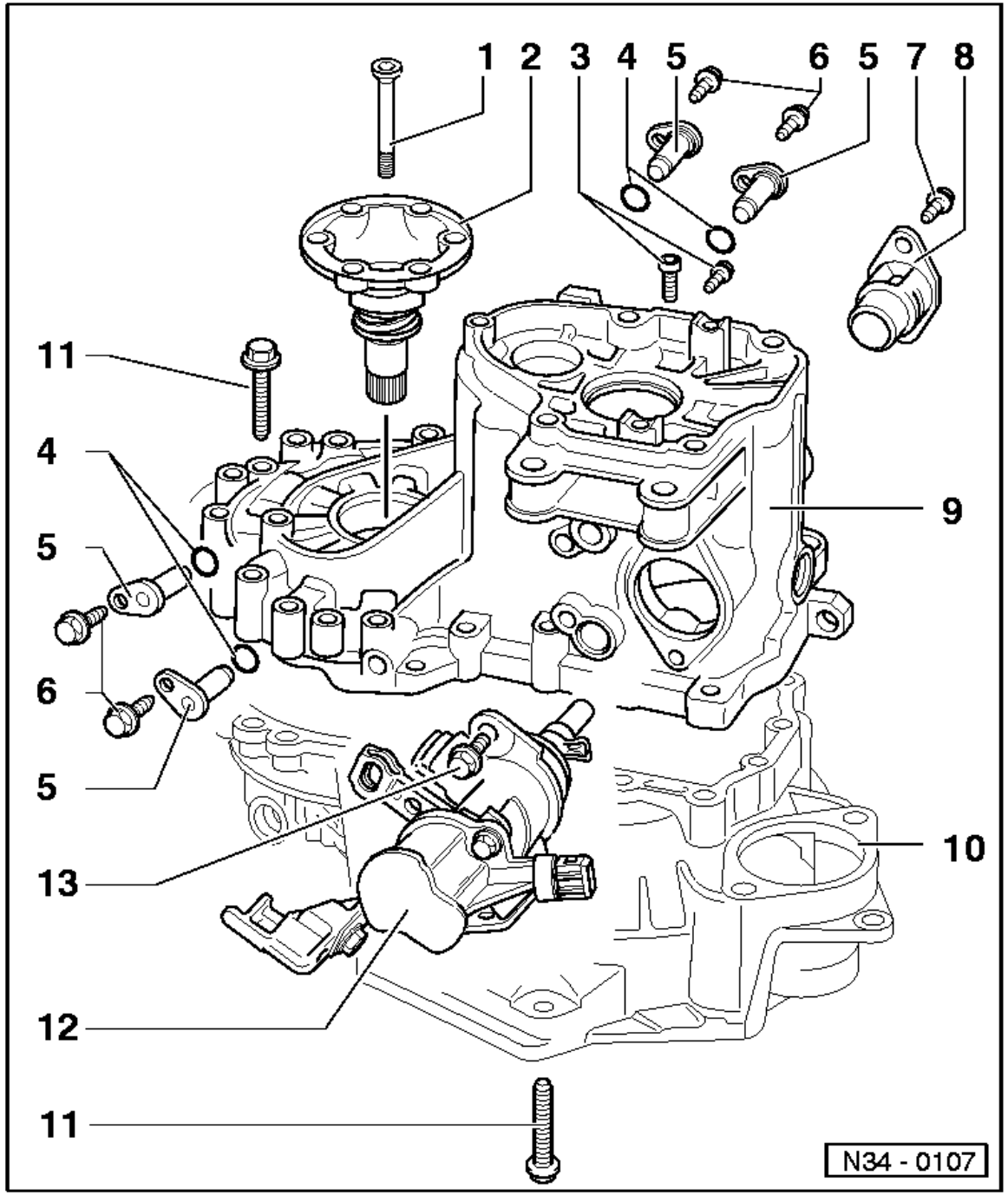

1 - Cone head bolt, 25 Nm

2 - Flange shaft with spring
- ◆ Removing and installing
  => Page 39-1
- ◆ Complement=> Page 39-8

3 - Torx socket head bolt, 30 Nm
- ◆ For reverse shaft support
- ◆ Self-locking
- ◆ Always renew

4 - O-ring
- ◆ Always renew

5 - Pivot pin

6 - Bolt, 25 Nm

7 - Bolt, 25 Nm

8 - Cover plate

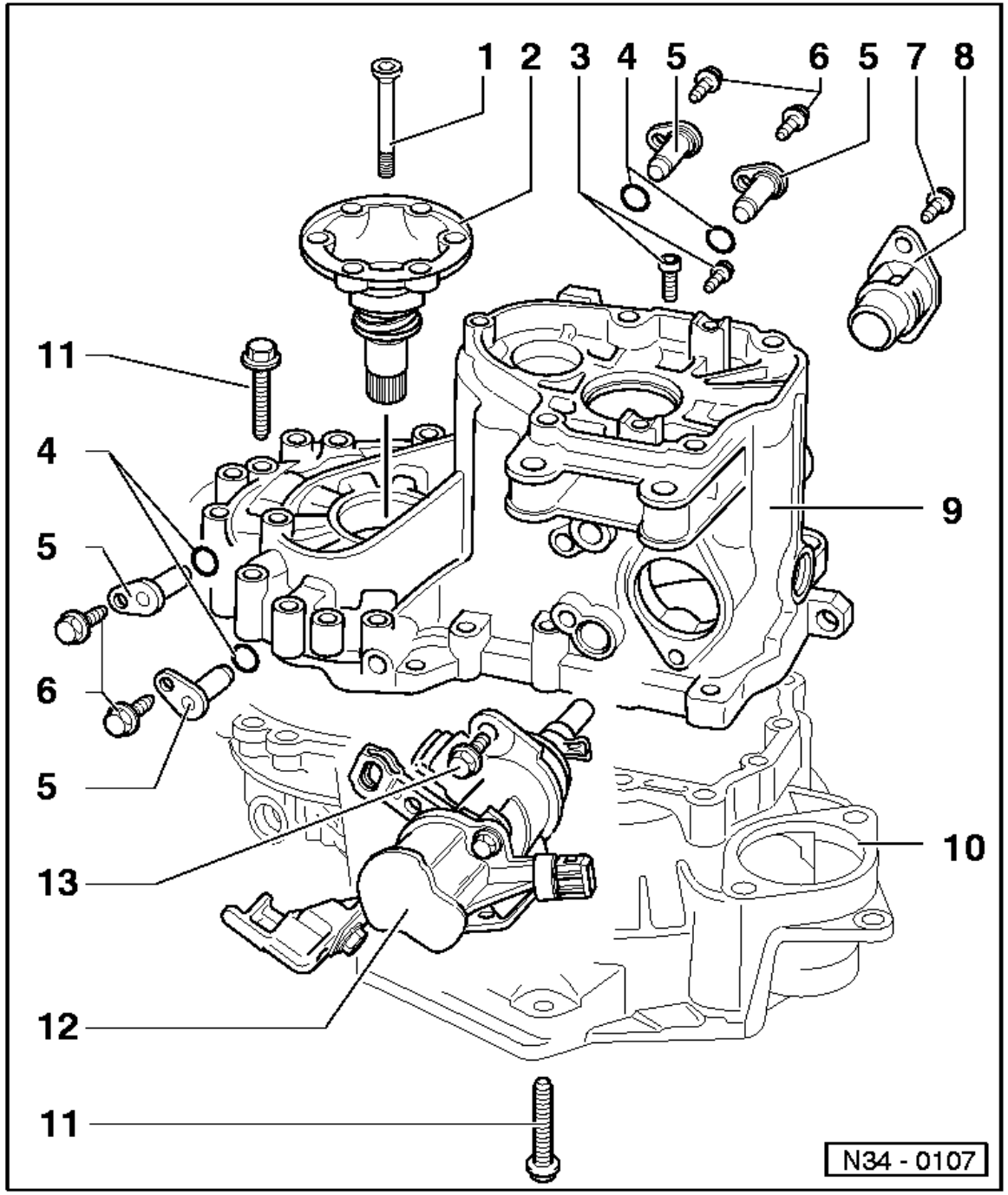

9 - Gearbox housing
- ◆ Servicing => Page 34-109

10 - Clutch housing
- ◆ Servicing => Page 34-109

11 - Hexagon bolt, 25 Nm then turn 90°further

12 - Selector mechanism
- ◆ Dismantling and assembling =>from Page 34-118

13 - Hexagon bolt, 25 Nm