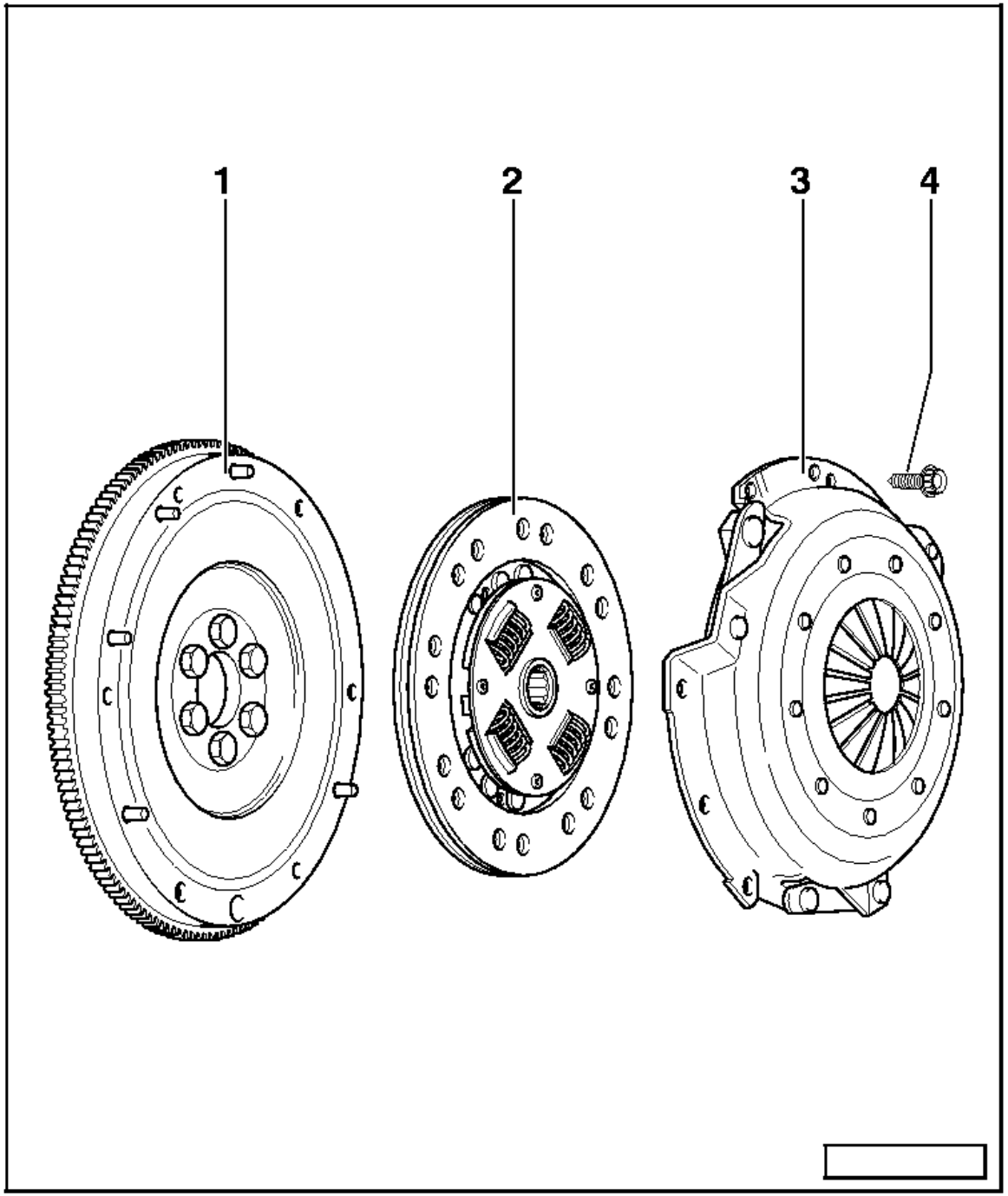


(Gearbox removed)

***Notes:***

◆ Before replacing the clutch and pressure plate note fault finding transmission No.9 - Defects on the clutch and clutch mechanism

◆ Replace clutch plates and pressure plates with damaged or loose rivets

◆ Select correct clutch plate and pressure plate according to parts list and engine code.

**1 - Flywheel**

◆ Ensure centring pins are a tight fit
◆ Contact surface for clutch lining must be free of grooves, oil and grease
◆ Removing and installing

=> Repair group13

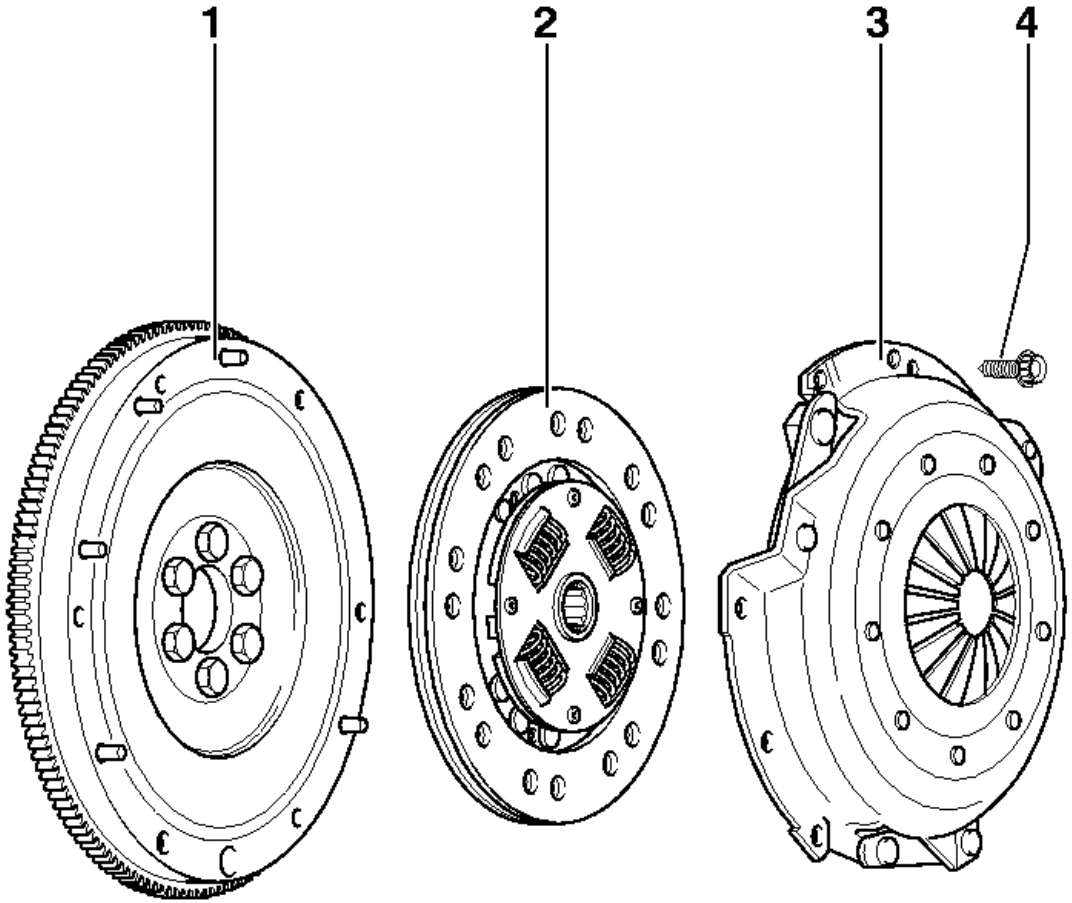


**2 - Clutch plate**

- Diameter
  =>from page 00-3
- Note installation position, spring cage faces to pressure plate
- Centring => Fig.1
- Lightly grease splines

***Note:***

*Clean input shaft splines and on used clutch plates, the hub splines, remove corrosion and apply only a very thin coating of grease Part No: G 000 100 to the input shaft splines. Then move clutch plate to and fro on input shaft until hub moves freely on shaft. Excess grease must be removed.*

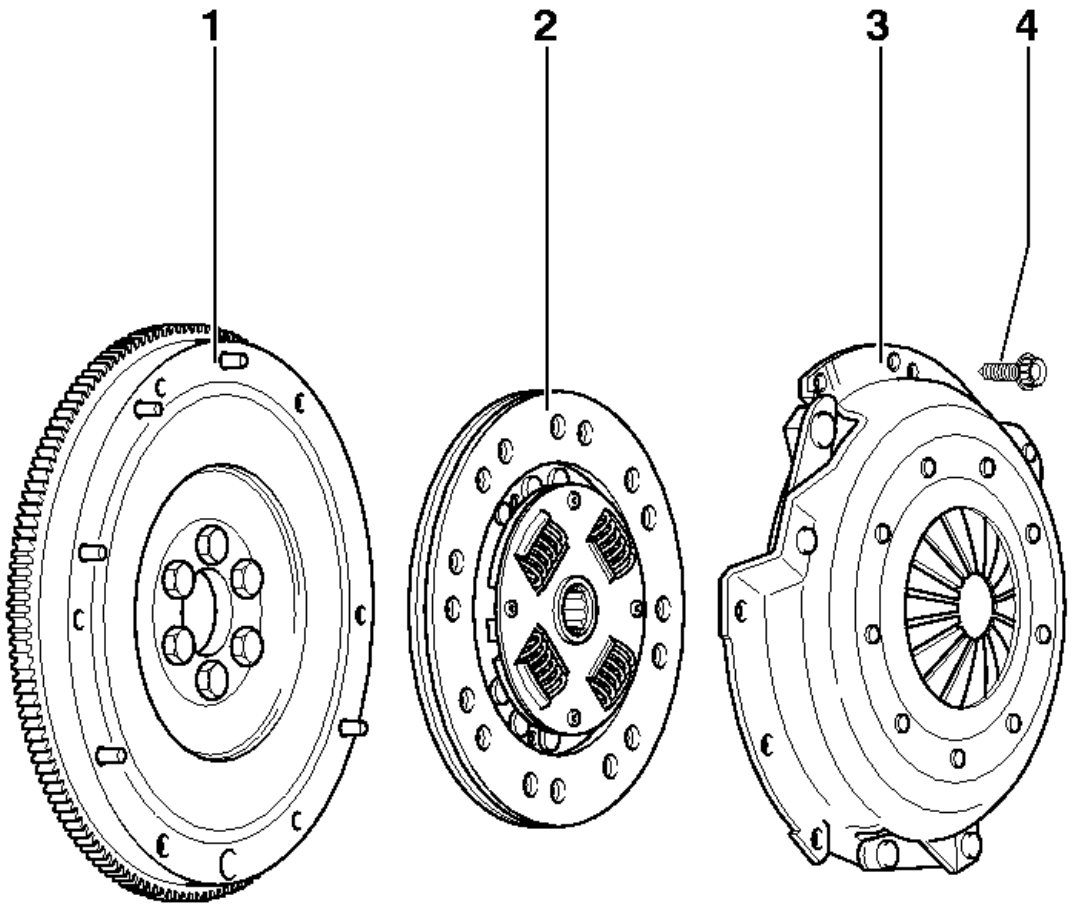


**3 - Pressure plate**

- Removing and installing => Fig.1
- Check ends of diaphragm spring => Fig.2

***Note:***

*Pressure plates are protected against corrosion and greased. Only the contact surface may be cleaned, otherwise the service life of the clutch will be considerably reduced.*

**4 - Twelve point bolt, 20 Nm**

- Loosen and tighten gradually and diagonally

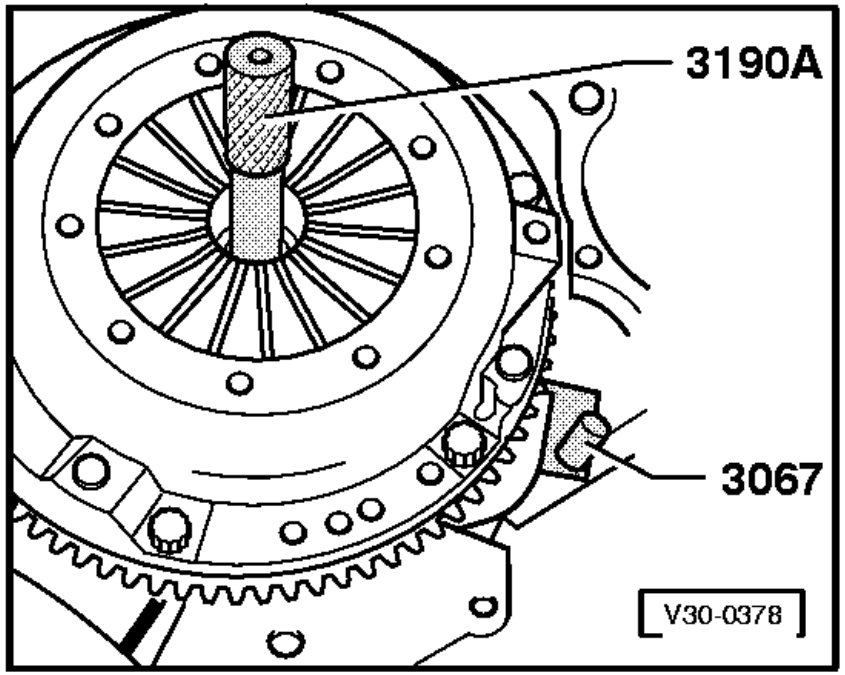


⇦ **Fig.1Centring clutch plate and removing and installing pressure plate**

- Loosen and tighten bolts gradually and diagonally.

- Reverse position of retainer 3067 when removing.

***Note:***

*Pressure plate contact surface and clutch plate must make full contact with flywheel. Tighten bolts diagonally and evenly to prevent damage to the centralising holes in the pressure plate housing and the centralising pins in the flywheel.*

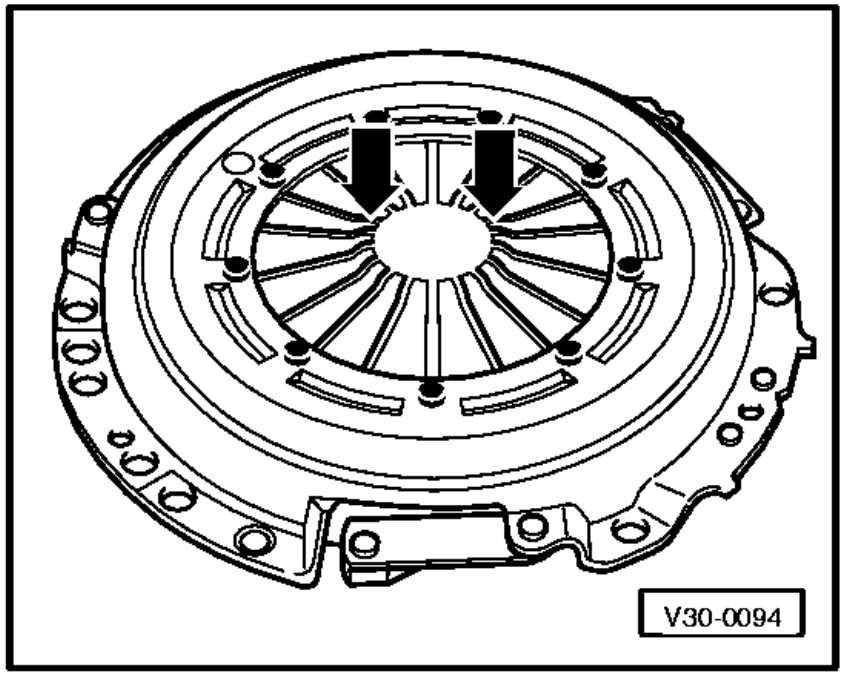


⇦ **Fig.2Checking ends of the diaphragm spring (arrows)**

● Wear up to half the thickness of the diaphragm spring is permitted.