Removing viscous coupling and rear axle housing from bevel gear housing

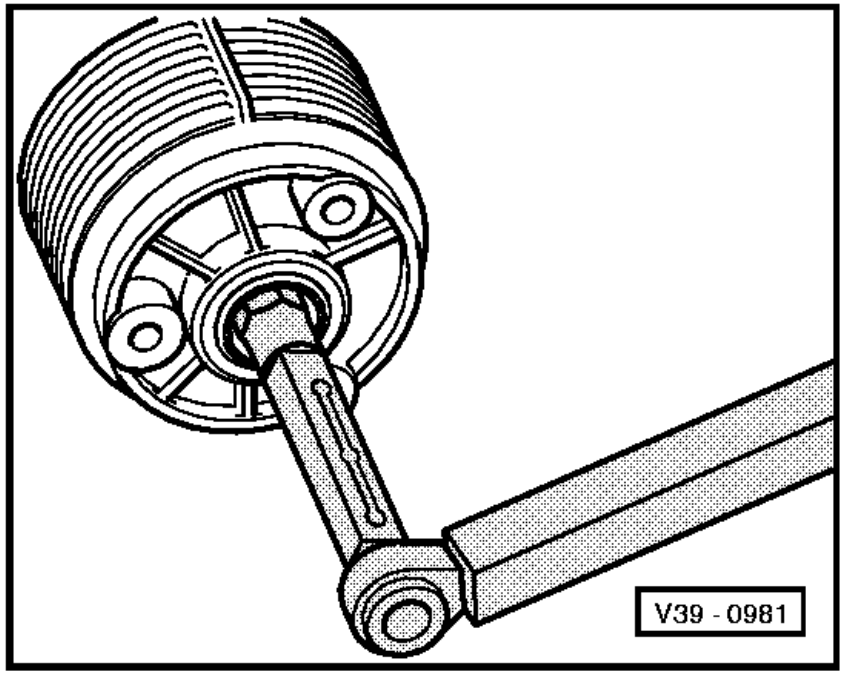

- Drain gearbox oil.

⇦ - Remove viscous coupling centralizing nut using a spark plug tool.
First remove spark plug rubber guide from tool.

- Take off viscous coupling.

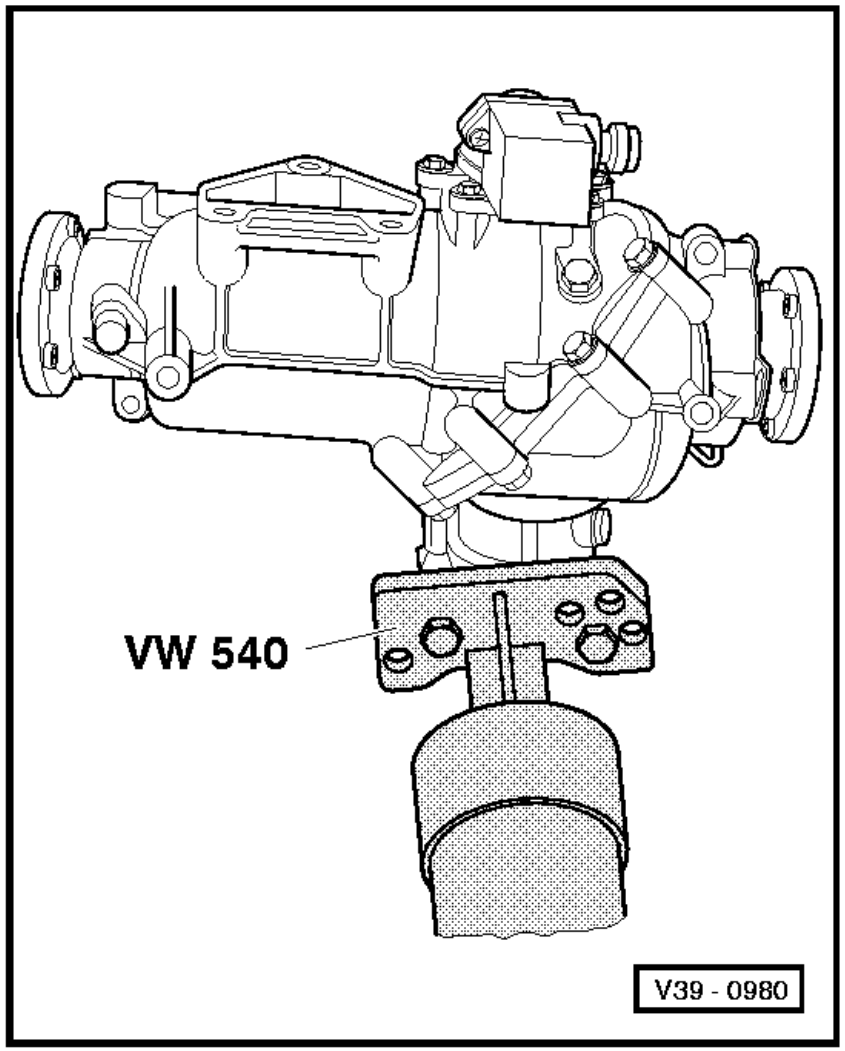

⇦ - Tension rear of final drive to assembly stand.

- Remove stud for viscous coupling.

- Unbolt vacuum element, turn through 90° and take off.

- Lever out sealing cap from drive flange on ring nut side, to do this pierce centre of cap with a screwdriver.

- Remove circlip and dished washer.

- Pull drive flange off on ring nut side, with VW 391.

- Unbolt ring nut locking plate.

Note:

Mark position of ring nut in relation to housing.

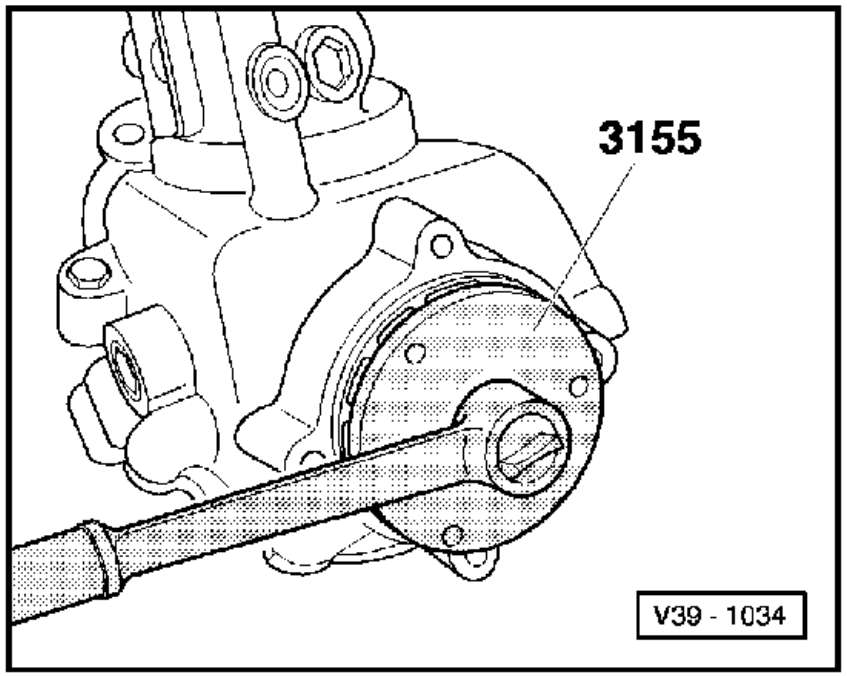

⇦ - Remove ring nut.

- Remove hexagon bolts from housing joint flange.

- Separate rear axle housing from bevel gear housing by tapping lightly and remove.

Notes:

◆ Bevel gear with input shaft will be pulled out of the rear axle housing, when doing this the locking balls (Qty. 6) may fall out of the sliding sleeve. When installing ensure balls are correctly seated.

◆ Installing rear axle housing to bevel gear housing and bolting viscous coupling on => Page 39-142.