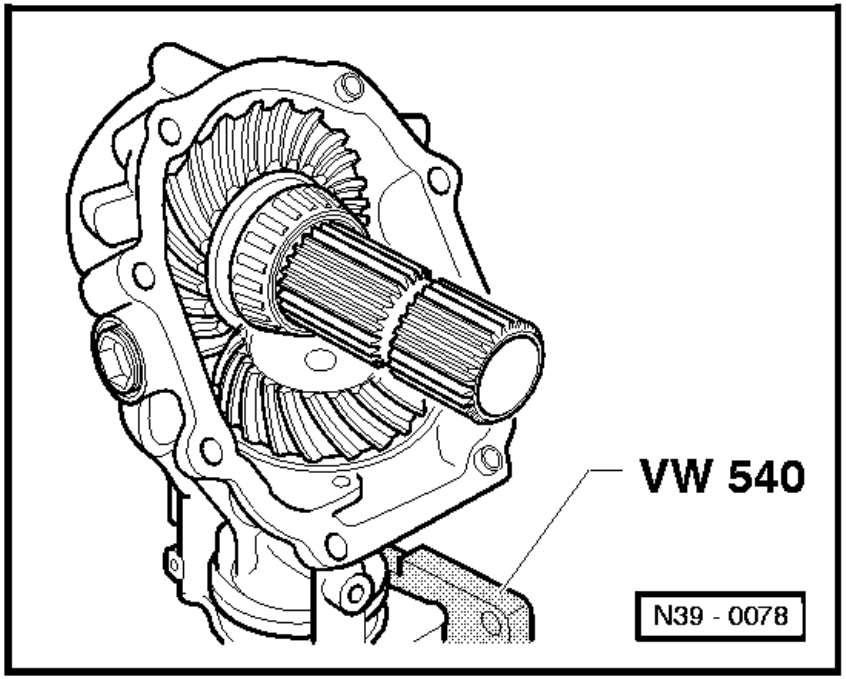

- Tension bevel gear housing complete with shaft bevel gear and bearings (without viscous coupling) into assembly stand. Ensure dowel sleeves (Qty. 2) are securely seated.

⇦ - Insert bevel gear with input shaft into bevel gear housing.

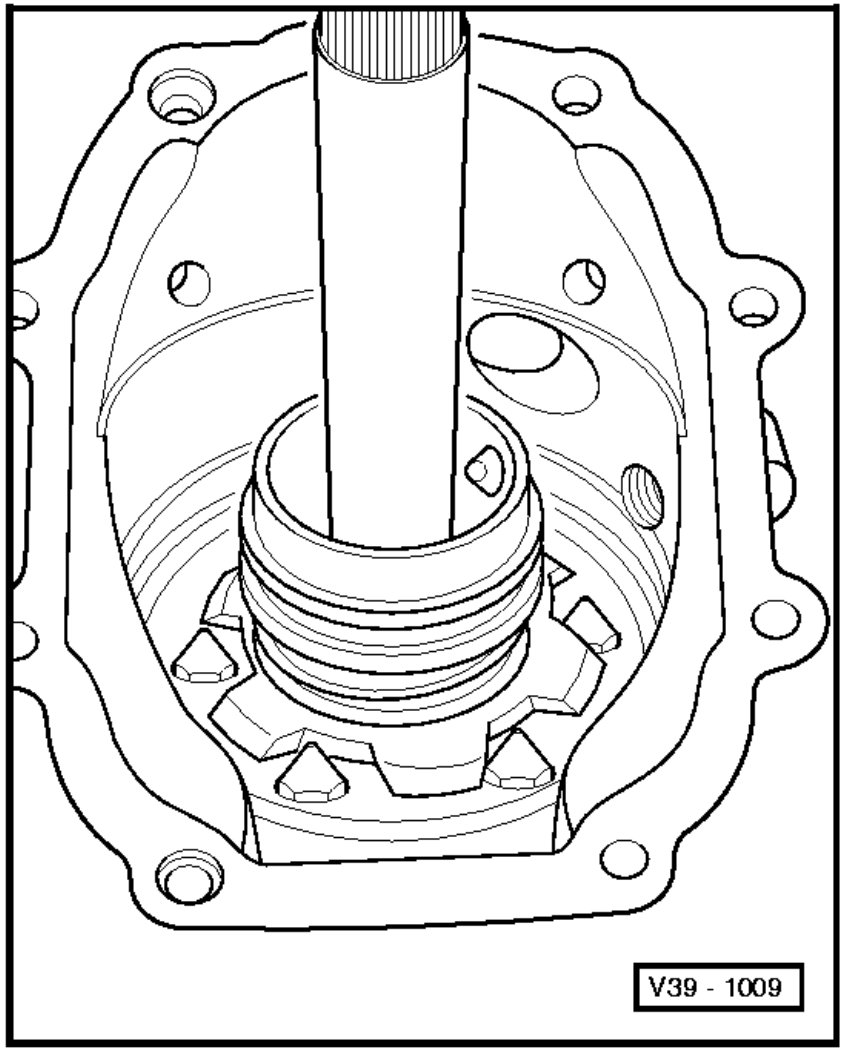

- Position rear axle housing with installed differential/freewheel vertical.

⇦ - Insert freewheel lock into rear axle housing as follows:
  - Fit balls using thick grease into operating sleeve.
  - Slide spring with sliding sleeve over operating sleeve.
  - Insert pre-assembled components with spring into rear axle housing.

⇦ - Installation position of freewheel lock:

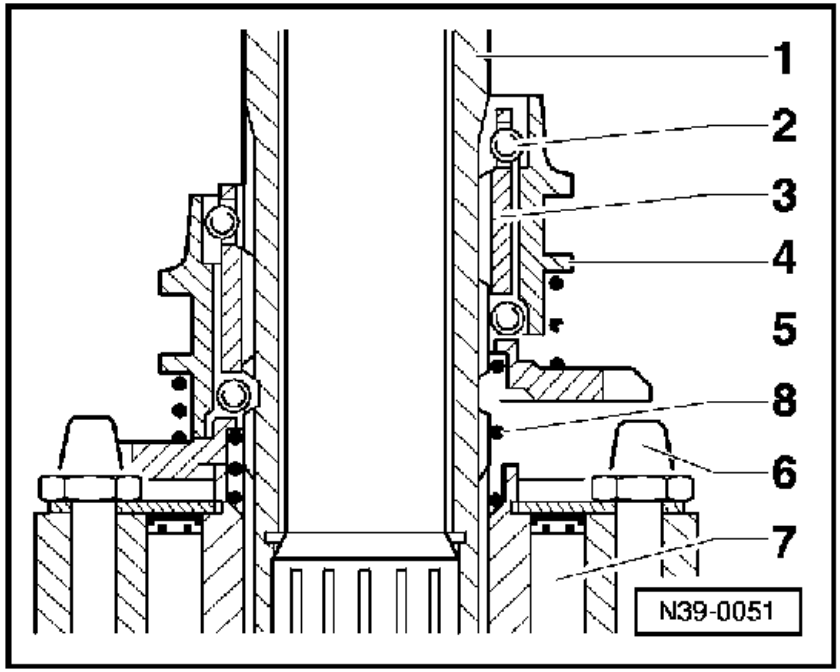

right-hand side: shown disengaged
left-hand side: shown engaged

1 -Input shaft
with internally mounted output shaft

2 -Ball (Qty. 6)

3 -Operating sleeve

4 -Sliding sleeve
outer machined collar towards spring

5 -Spring

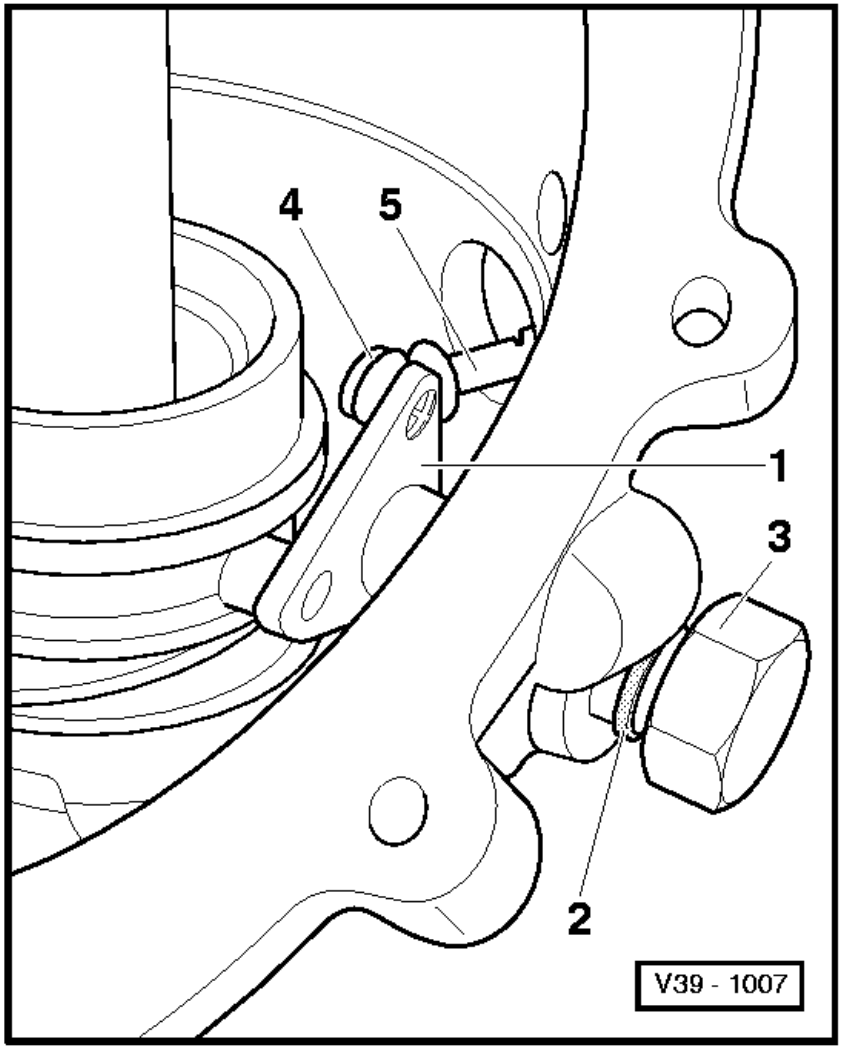

6 -Bolt with conical head

7 -Freewheel

8 -Spring

⇦ - Install switch mechanism for freewheel lock into rear axle housing.
Installation position:

1 -Operating lever

2 -Seal

3 -Mounting bolt

4 -Expander pin

5 -Selector rod

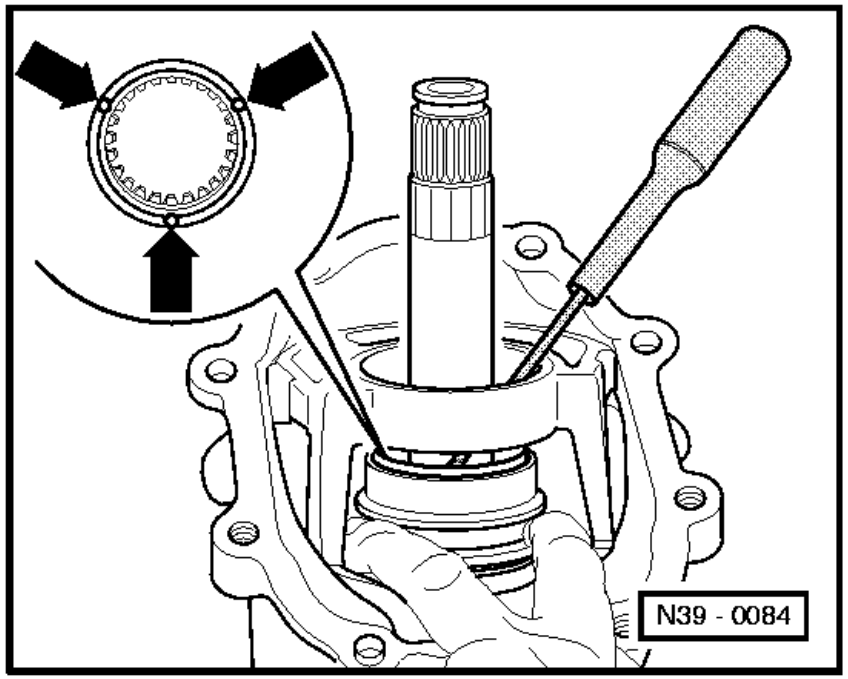

- Insert bearing support into rear axle housing and tighten securing bolts hand tight.

- Apply thin coat of sealing compound AMV 188 200 03 to housing joint flange contact surfaces.

⇦ - Guide sliding sleeve by hand to freewheel and press front ball row (arrows) balls with a screwdriver towards inner edge of sliding sleeve (against arrow direction).

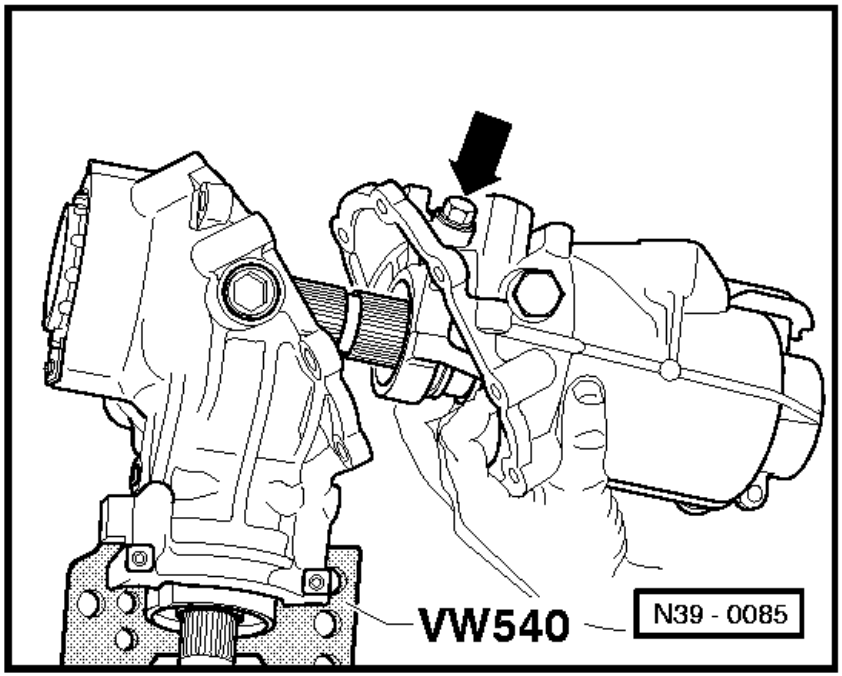

⇦ - Guide rear axle housing horizontally onto bevel gear housing (tensioned in assembly stand) ensuring:
- Sliding sleeve is held by hand against the freewheel. Ensuring that the front row balls lie against the sliding sleeve.
- Release sliding sleeve (the front row of balls are guided over the input shaft circumferal collar) and push rear axle housing onto stop ensuring that the selector lever engages in the operating sleeve (rotate differential via short output shaft if necessary).

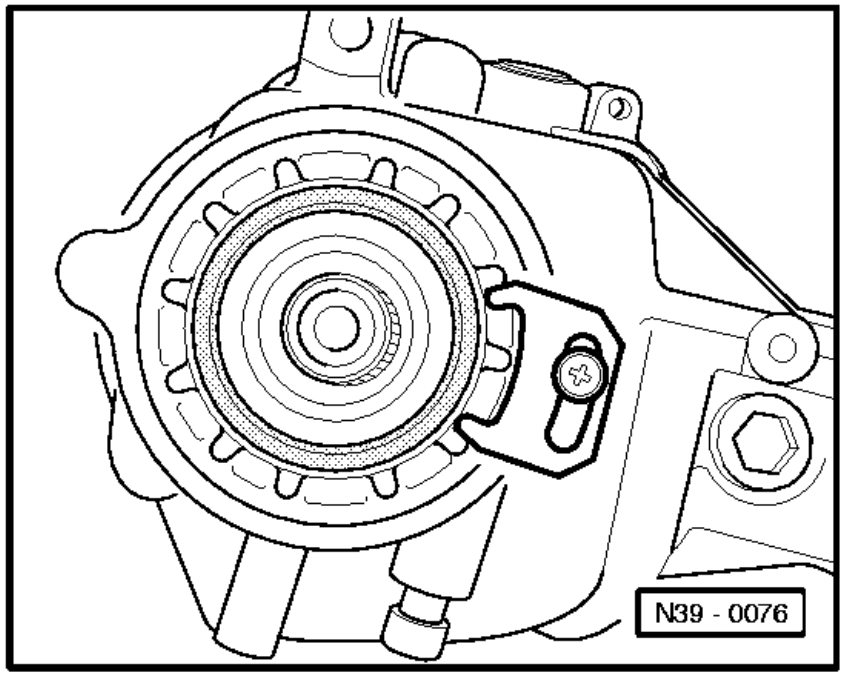

- Tighten housing components to torque setting.

- Reset ring nut to previously marked position or readjust if necessary => Page 39-174.

⇦ - Install ring nut lock plate.

- Tighten bearing support hexagon bolts (Qty. 2, => Page 39-144, illustration N39-0085, arrow) to torque setting.

- Drive in seal for left and right-hand drive flange onto stop with sleeve 3158.

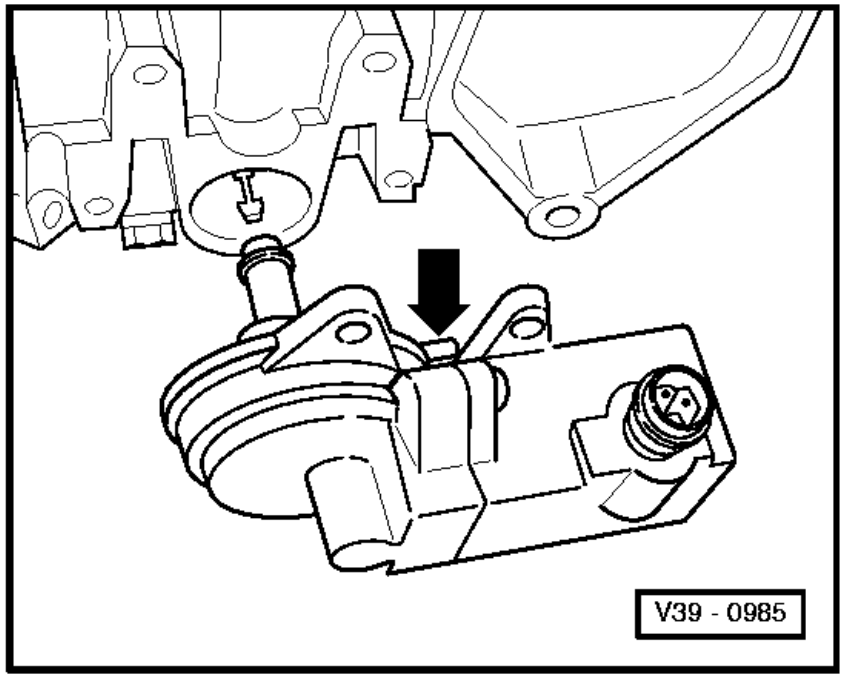

- Pull left and right-hand drive flange in with assembly aid for drive flange VW 391 and secure using dished spring and circlip.

- Press in new sealing caps.

⇦ - Press vacuum unit onto relay lever pin, to do this pull connecting piece out from vacuum unit and temporarily seal the vacuum connection (arrow) by holding closed.

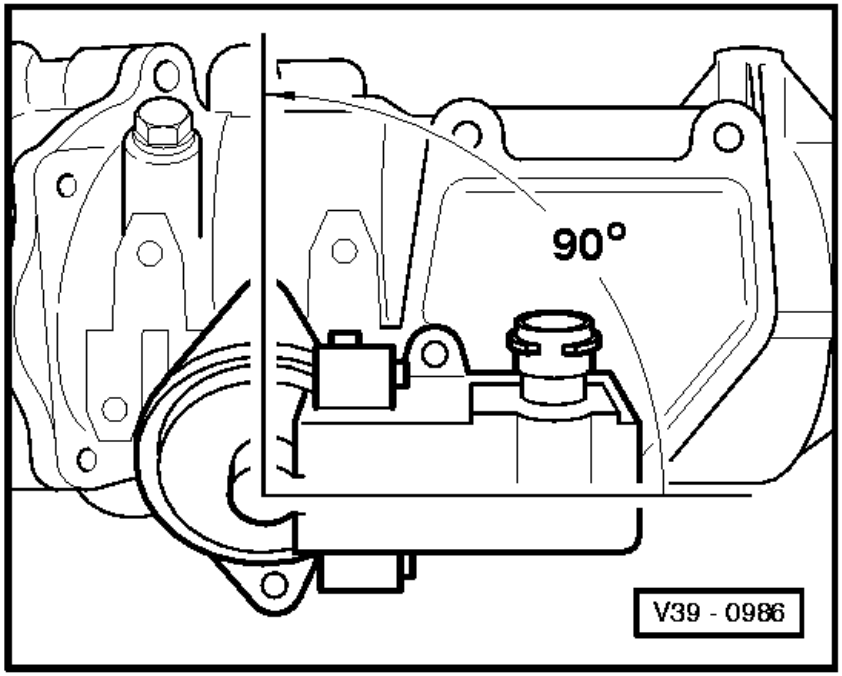

⇦ - Slide vacuum unit on and turn through 90°.
- The vacuum unit must now have engaged onto the relay lever pin. Check by pulling out on vacuum unit!
- Push vacuum hose onto connection.
- Push vacuum unit in again and tighten bolts to torque setting.

- Drive new seal for viscous coupling onto stop with sleeve 3158.

- Install stud using locking fluid D 000 600 A2.

- Install viscous coupling.

- Tighten centralising nut to torque setting.

- Checking rear final drive oil
=> Page 39-111.