Position of shims

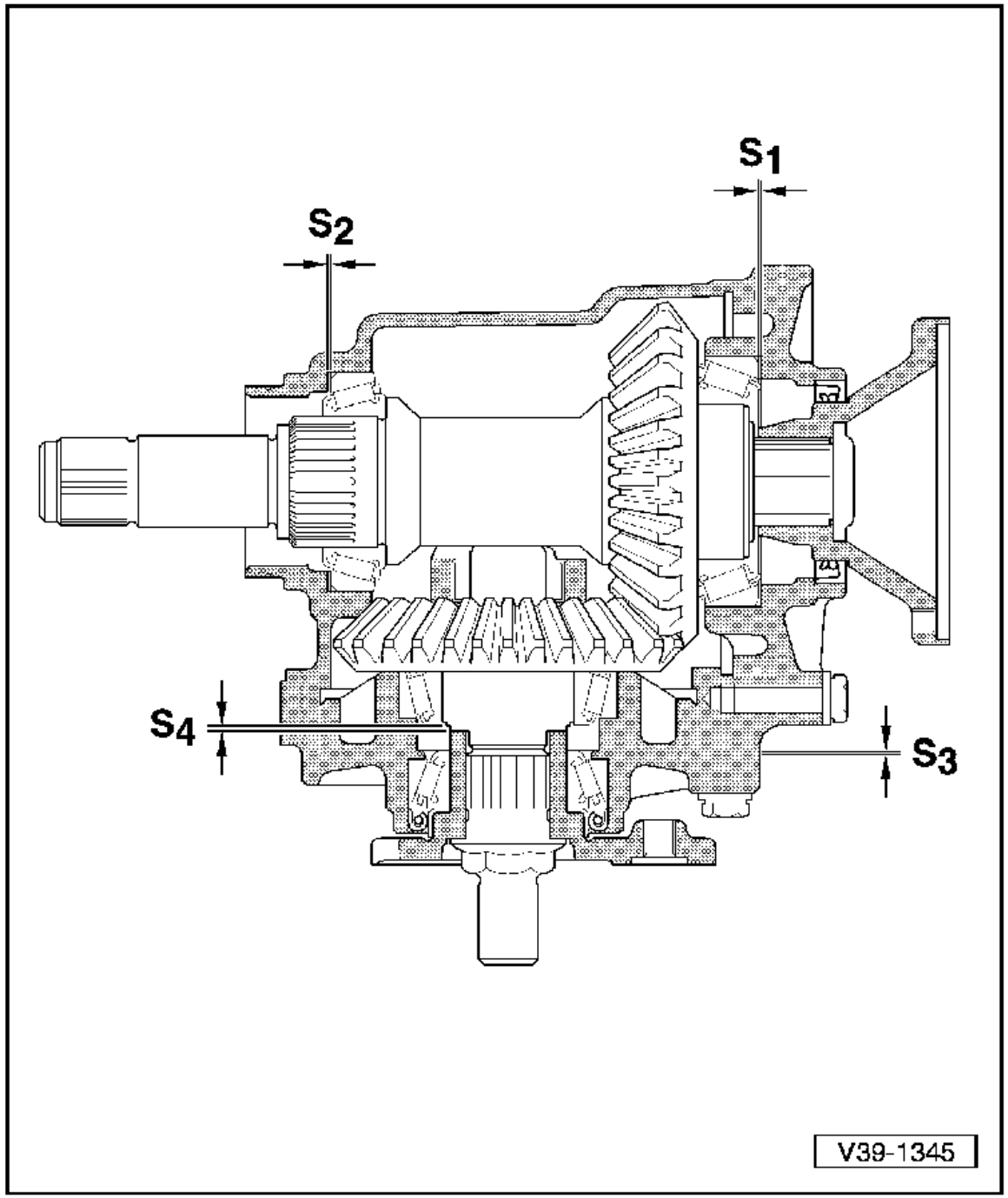

- **S1 -Shim for bevel gear taper roller bearing friction torque**
- **S2 -Shim for bevel gear positioning and friction torque**
- **S3 -Shim for shaft bevel gear**
- **S4 -Shim for bevel gear positioning and friction torque**