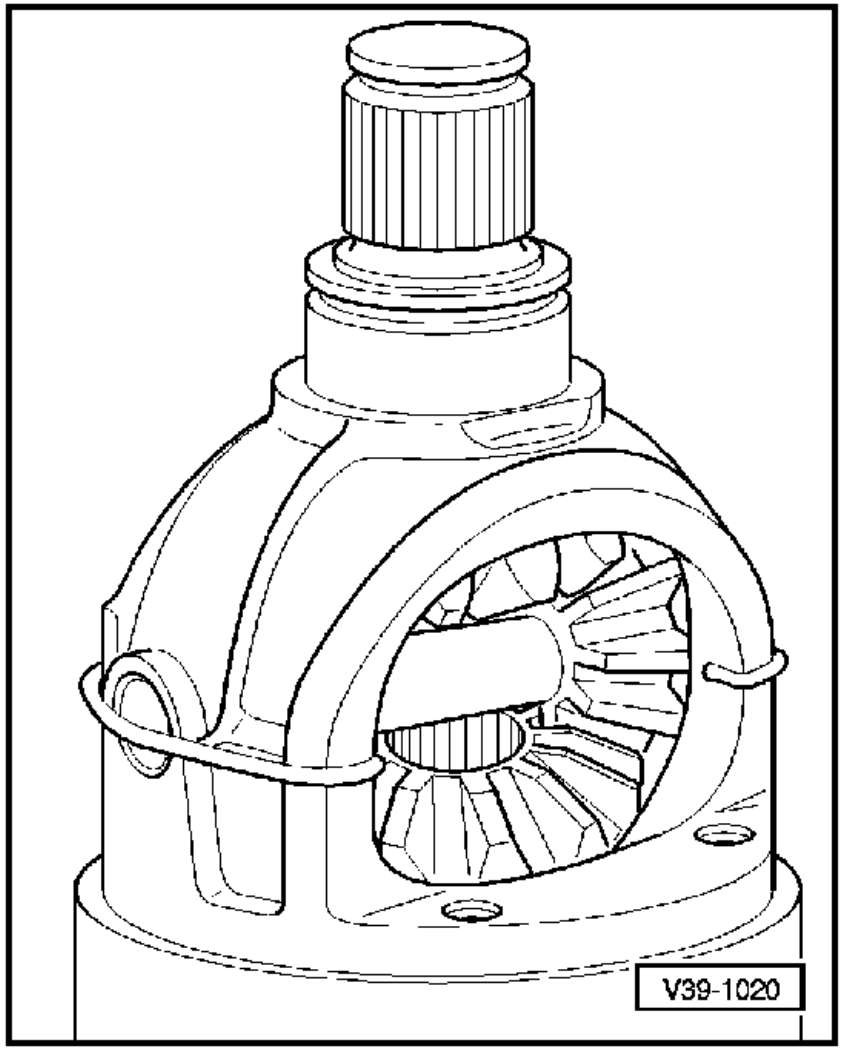

Dismantling

⇦ - Remove wire clip for securing the planet pinion axis shaft.

- Remove short and long output shaft circlips and then remove output shafts.

- Swing sunwheel out through side opening in differential housing (=>Page 39-152, illustration V39-1019) and take out.

- Drive small planet pinion axis shaft out.

- Take out planet pinion and one piece thrust washer.

Assembling

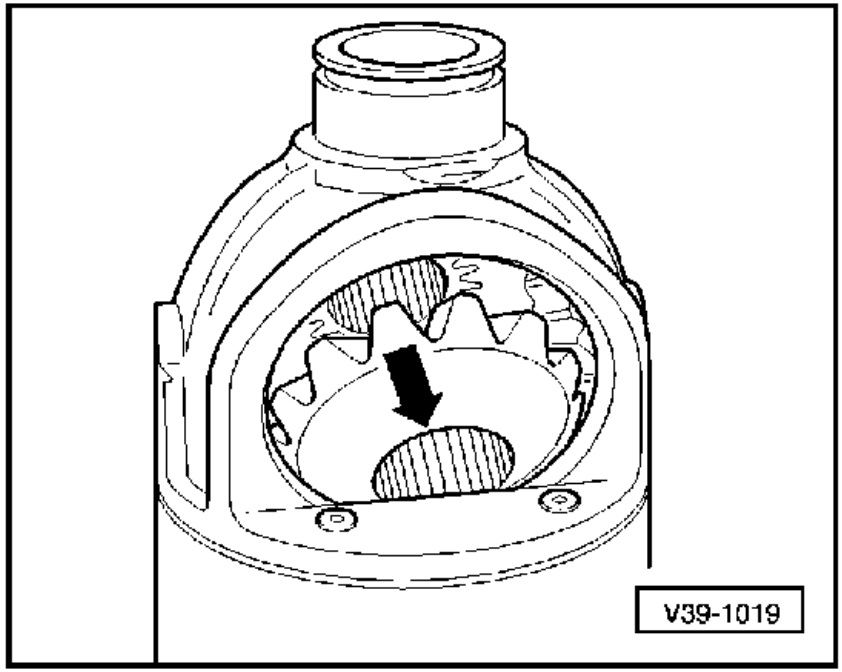

- Lubricate one-piece thrust washer with gearbox oil and install.

- Insert planet pinions and drive in planet pinion axis shaft

⇦ - Insert sun wheels turned through 180°and pivot into position (arrow).

- Guide short and long output shaft into sun wheels.

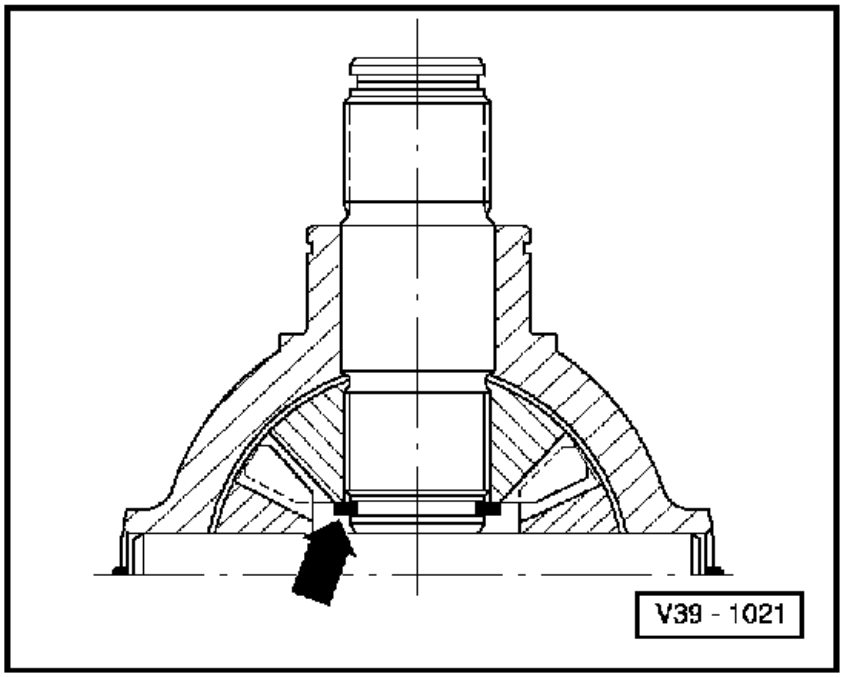

⇦ - Re-determine circlip (arrow) thickness (shown in short output shaft/sun wheel example).
  - Press short or long output shaft against the planet pinion axis shaft.
  - Press sun wheel against the housing and insert thick circlip.
  - Circlip must not catch at side, use thinner circlip if necessary.

The following adjustment shims are available:

Thickness (mm)	Part No.
2.0	020 409 299
2.3	020 409 299A

- Securing differential axis shafts with wire clip => Page 39-151.