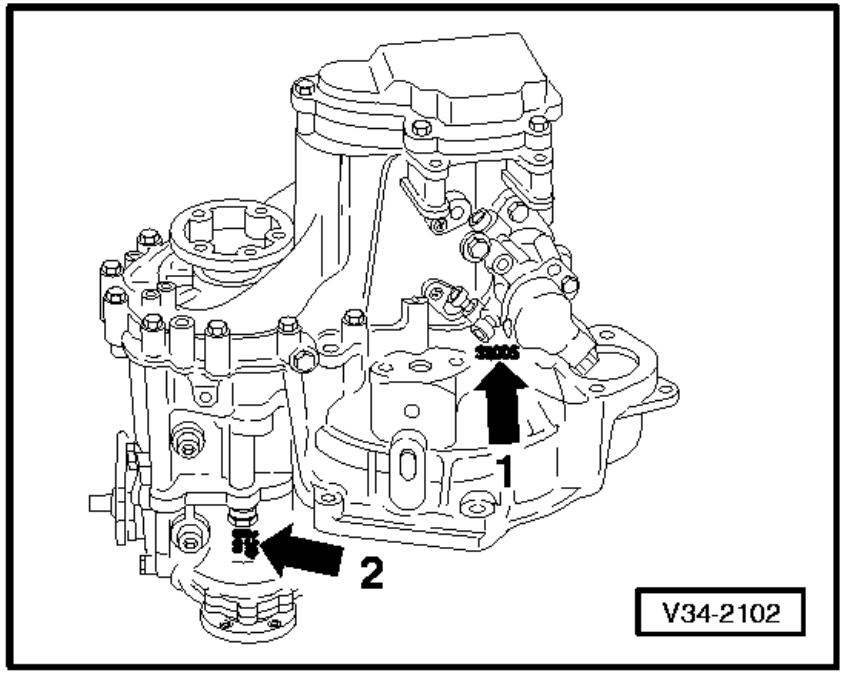

The four wheel drive manual gearbox 02C is installed in the Passat syncro as a 5 speed gearbox in conjunction with the 4-Cyl. engine or 6-Cyl. injection engine.

Allocation =>Page 00-3.

⇦ **Location on gearbox**

Code letters and date of manufacture (arrow 1)
Manual gearbox 02C (arrow 2)

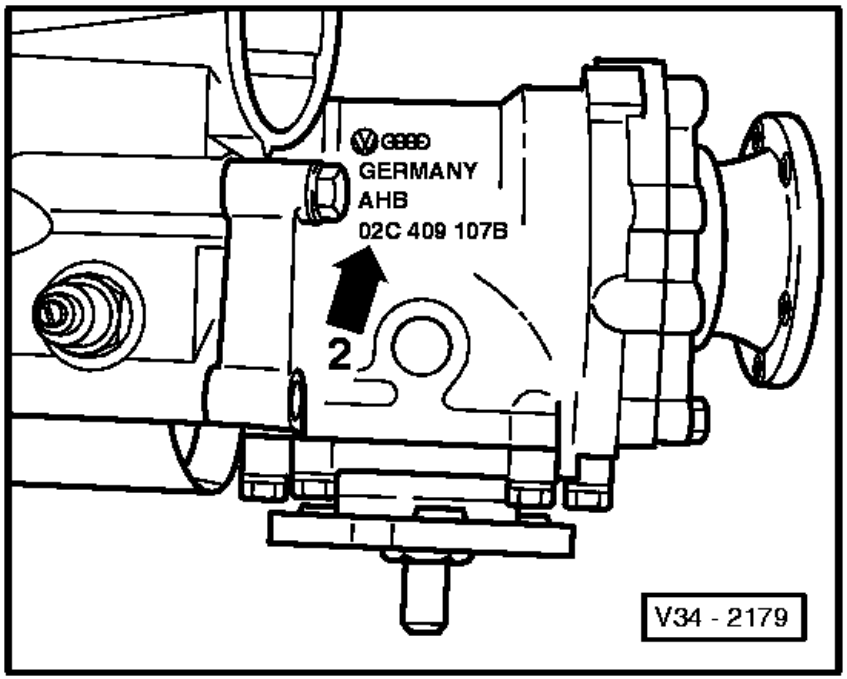

⇦ **Manual gearbox 02C (arrow 2)**

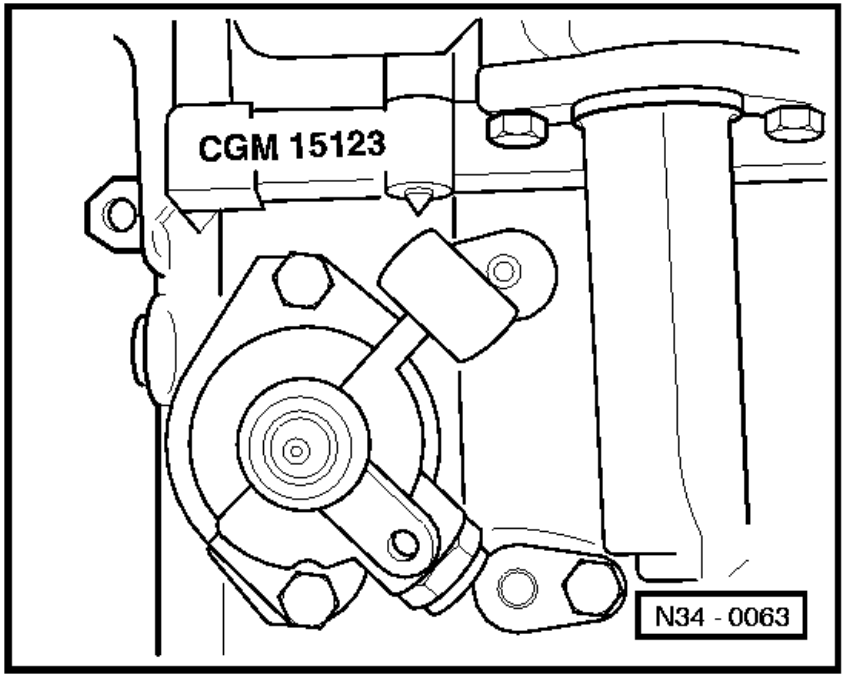

Example:	CGM	15	12	3
	I I Code letters	I I Day	I I Month	I I Year (1993) of manufacture

Additional data depends on manufacture.

Note:

The gearbox code letters are also shown on the vehicle identification plates.