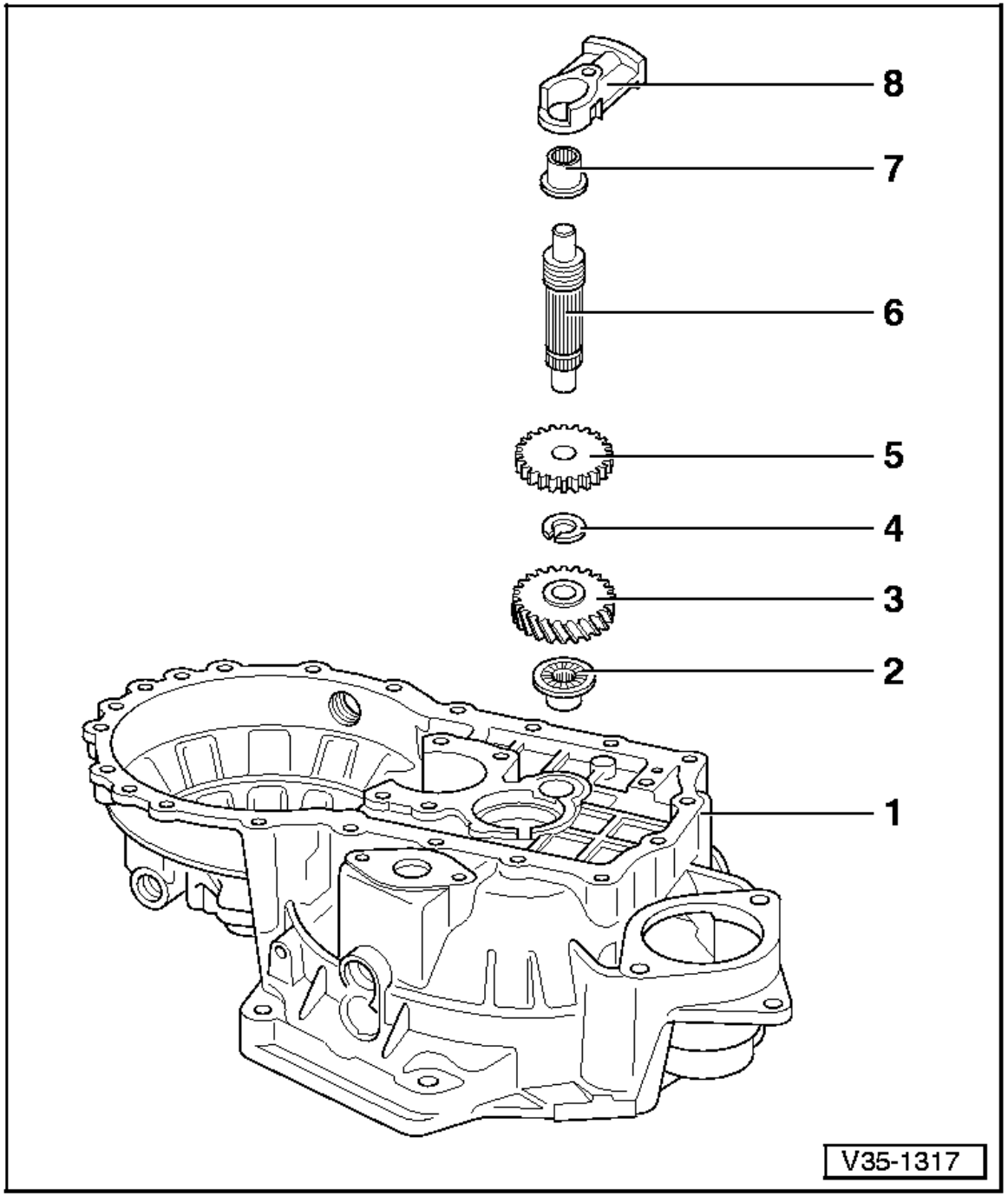

Note:

After dismantling, always renew needle roller bearing in clutch housing and reverse shaft support.

1 - Clutch housing

2 - Needle roller bearing
- ◆ Pulling out => Fig.1
- ◆ Pressing in => Fig.2

3 - Reverse gear wheel

4 - Circlip
- ◆ Always renew after removing

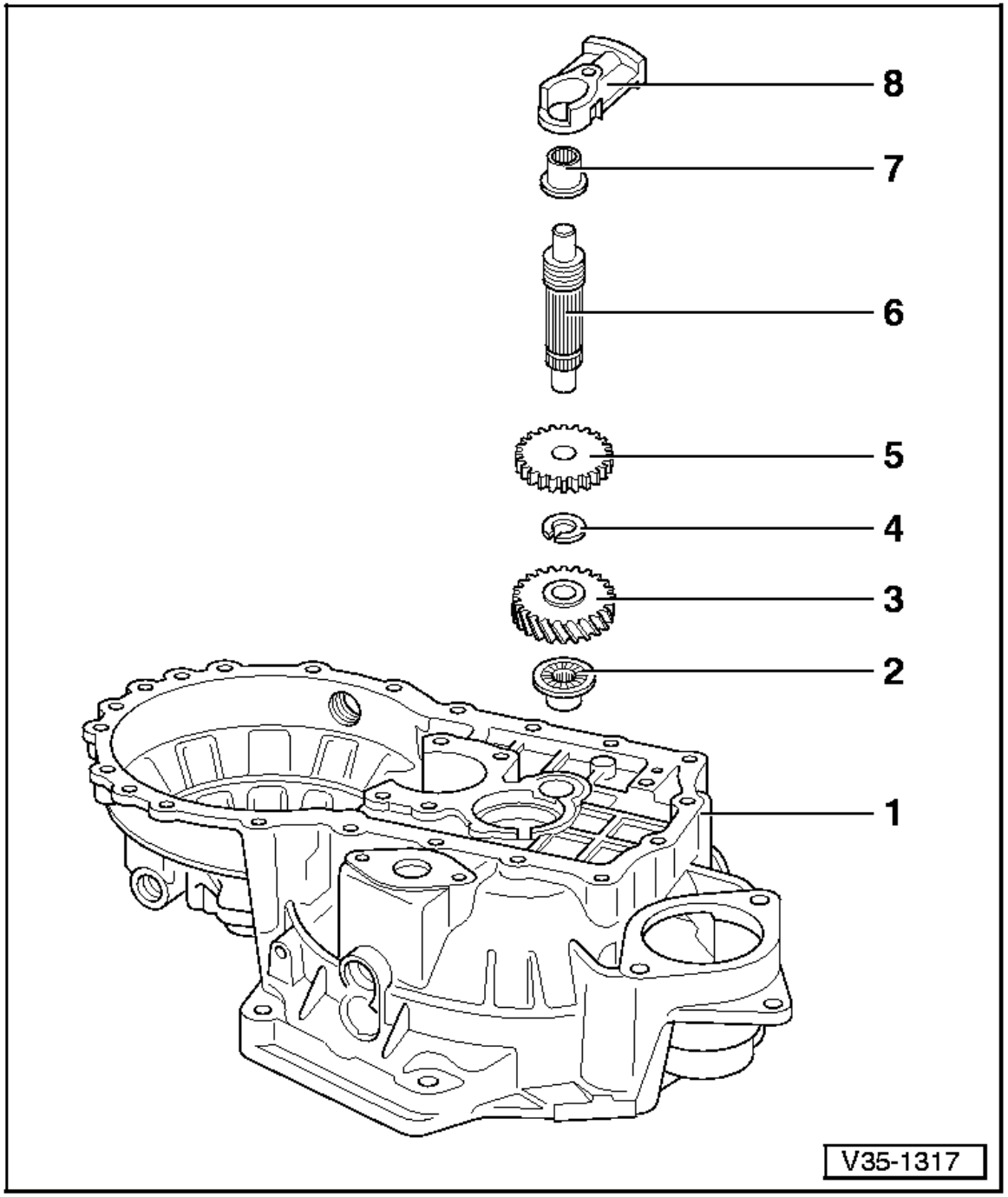

5 - Reverse sliding gear wheel
- ◆ Before replacing remove circlip
- ◆ Shoulder faces to reverse gear wheel

6 - Reverse shaft
- ◆ Removing => from Page 34-89

7 - Needle roller bearing
- ◆ Pressing out => Fig.3
- ◆ Pressing in => Fig.4

8 - Reverse shaft support
- ◆ Removing and installing
  => from Page 34-89

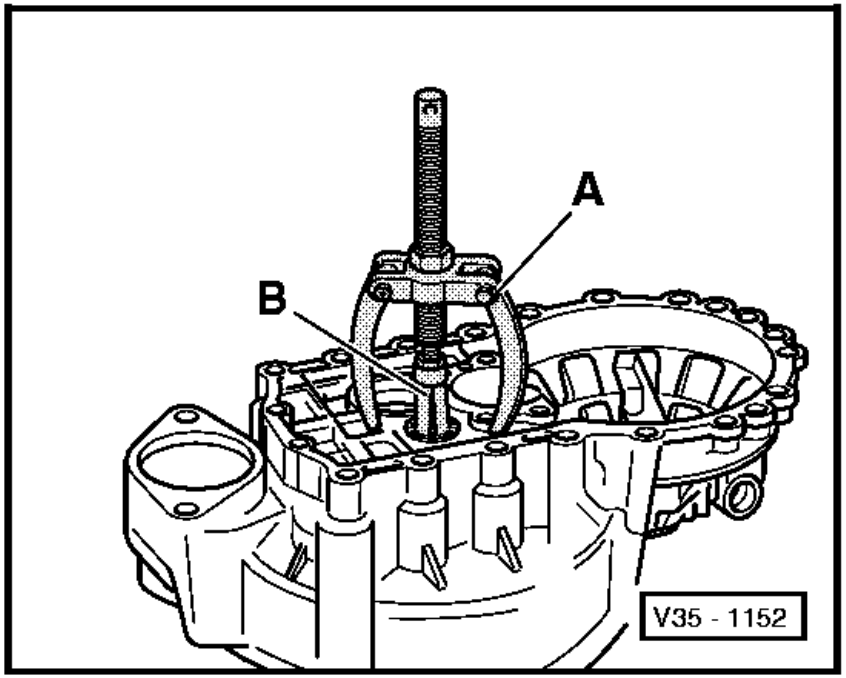

⇦ **Fig.1Pulling needle roller bearing out of clutch housing**

A - Counter support, e.g. Kukko 22/1

B - Internal extractor 14.5 ... 18.5 mm, e.g. Kukko 21/2

Note:

The needle bearing is destroyed during removal and must be renewed.

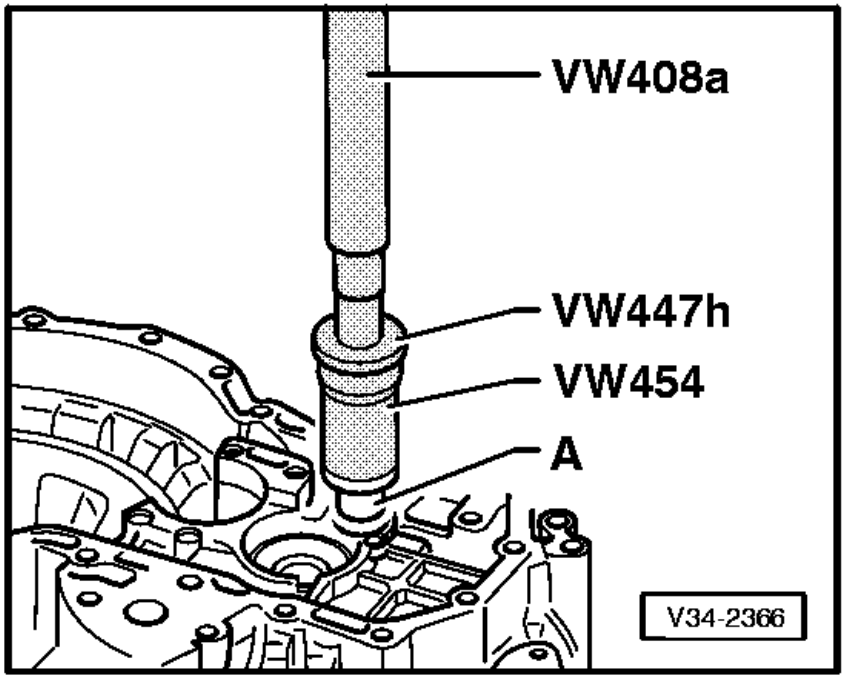

⇦ **Fig.2Pressing needle roller bearing -A- into clutch housing**

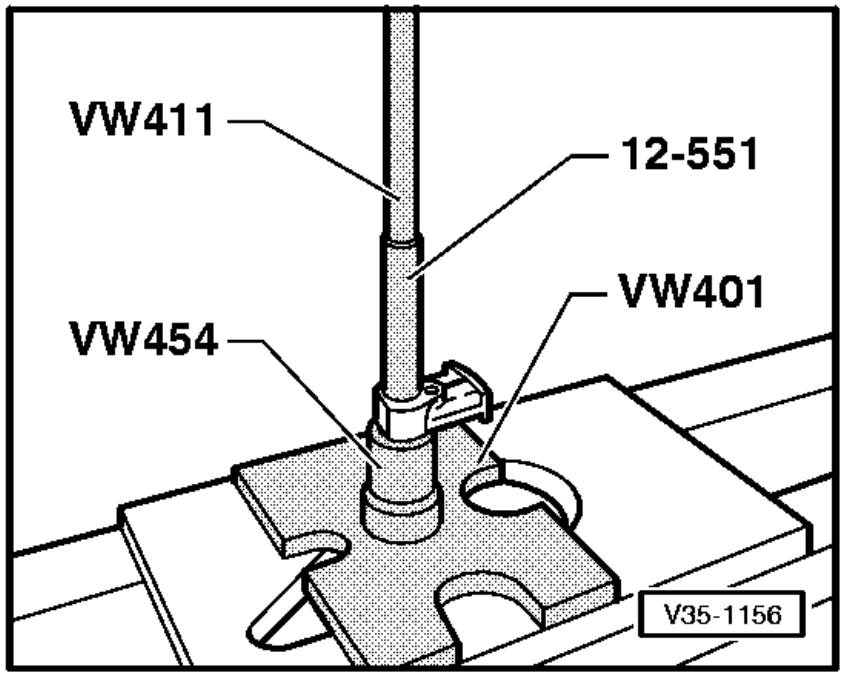

⇦ **Fig.3Pressing needle roller bearing out of the reverse shaft support**

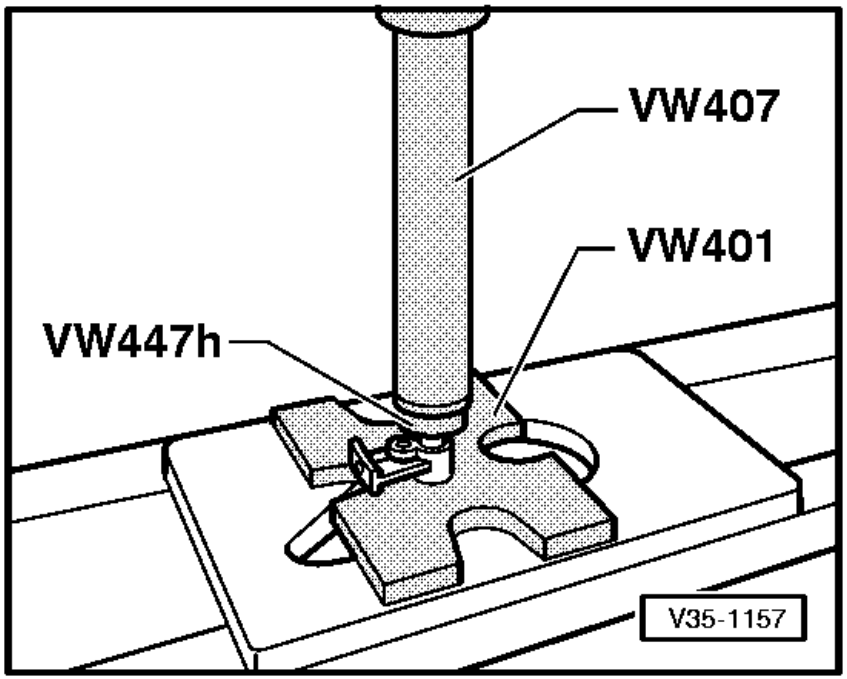

⇦ **Fig.4Pressing needle roller bearing into reverse shaft support**