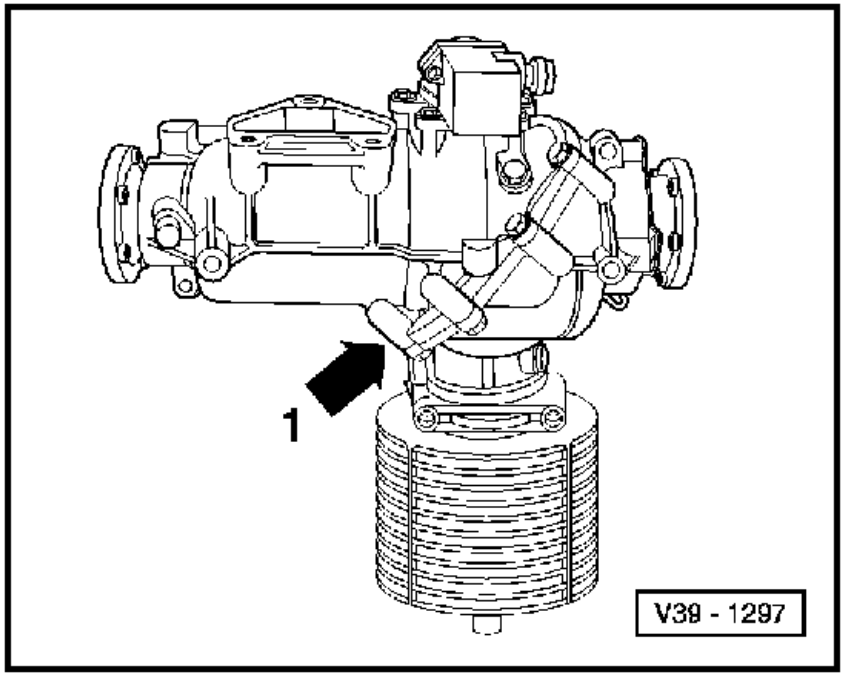


Final drive unit 009 is allocated to four wheel drive manual gearbox 02C.

Allocation => Page 00-6

⇦ **Code letters and date of manufacture (arrow 1)**

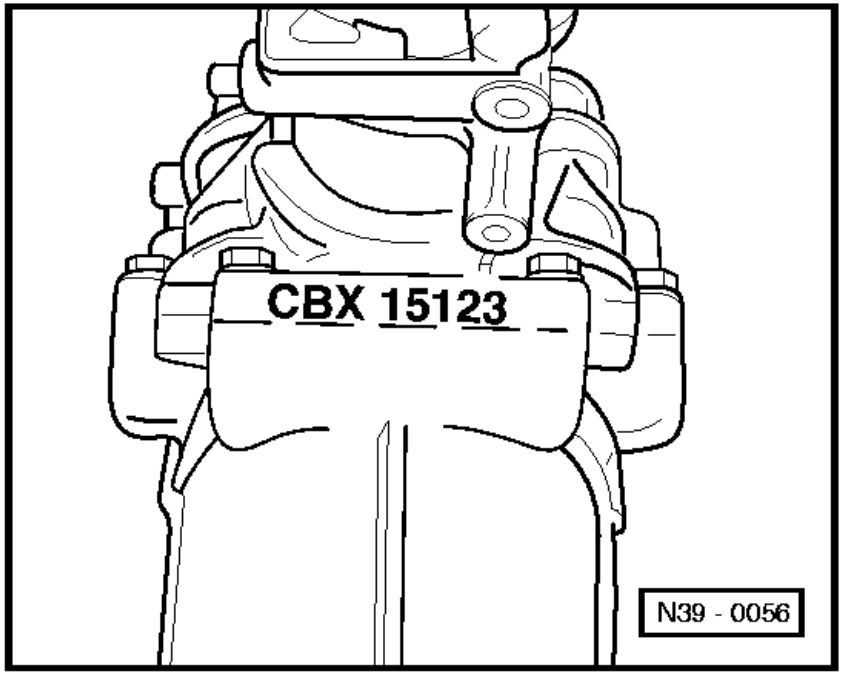


⇦ **Code letters and date of manufacture**

| **Example:** | CGX | 15 | 12 | 3 |
|---|---|---|---|---|
| | I<br>I<br>Code letters | I<br>I<br>Day | I<br>I<br>Month | I<br>I<br>Year (1993) of manufacture |