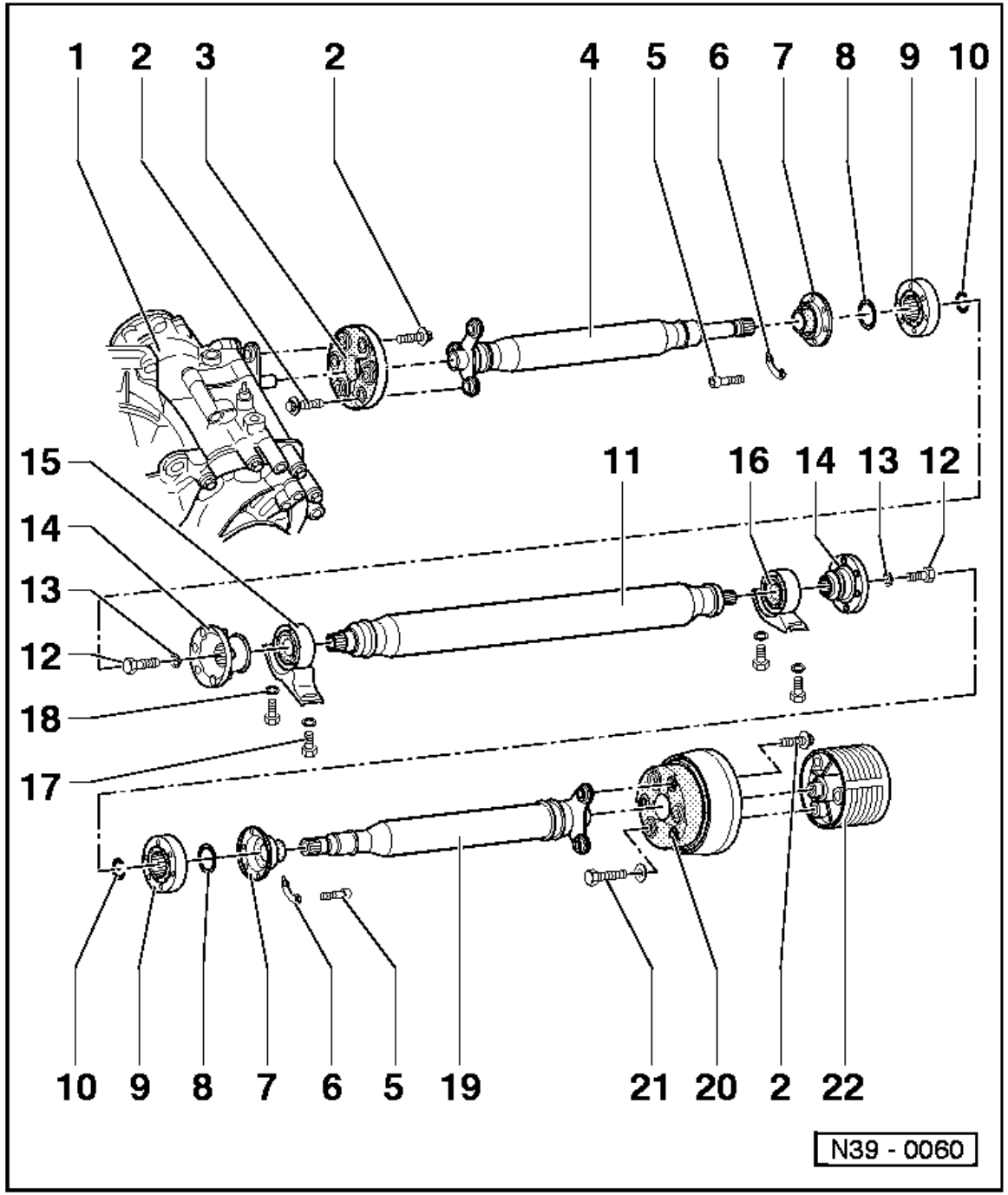

Notes:

◆ To obtain the quietest possible running, the entire propshaft is balance during manufacture. It is not possible to balance the entire propshaft or the individual propshaft sections using workshop equipment, therefore if a front, centre or rear propshaft section is damaged then the complete propshaft must be renewed.

◆ Keep propshaft straight, only store and transport fully extended.

◆ Before removing, mark the positions of all parts in relation to each other. Reinstall in the same position otherwise imbalance will be excessive, creating rumbling noises and possibly damaging mountings.

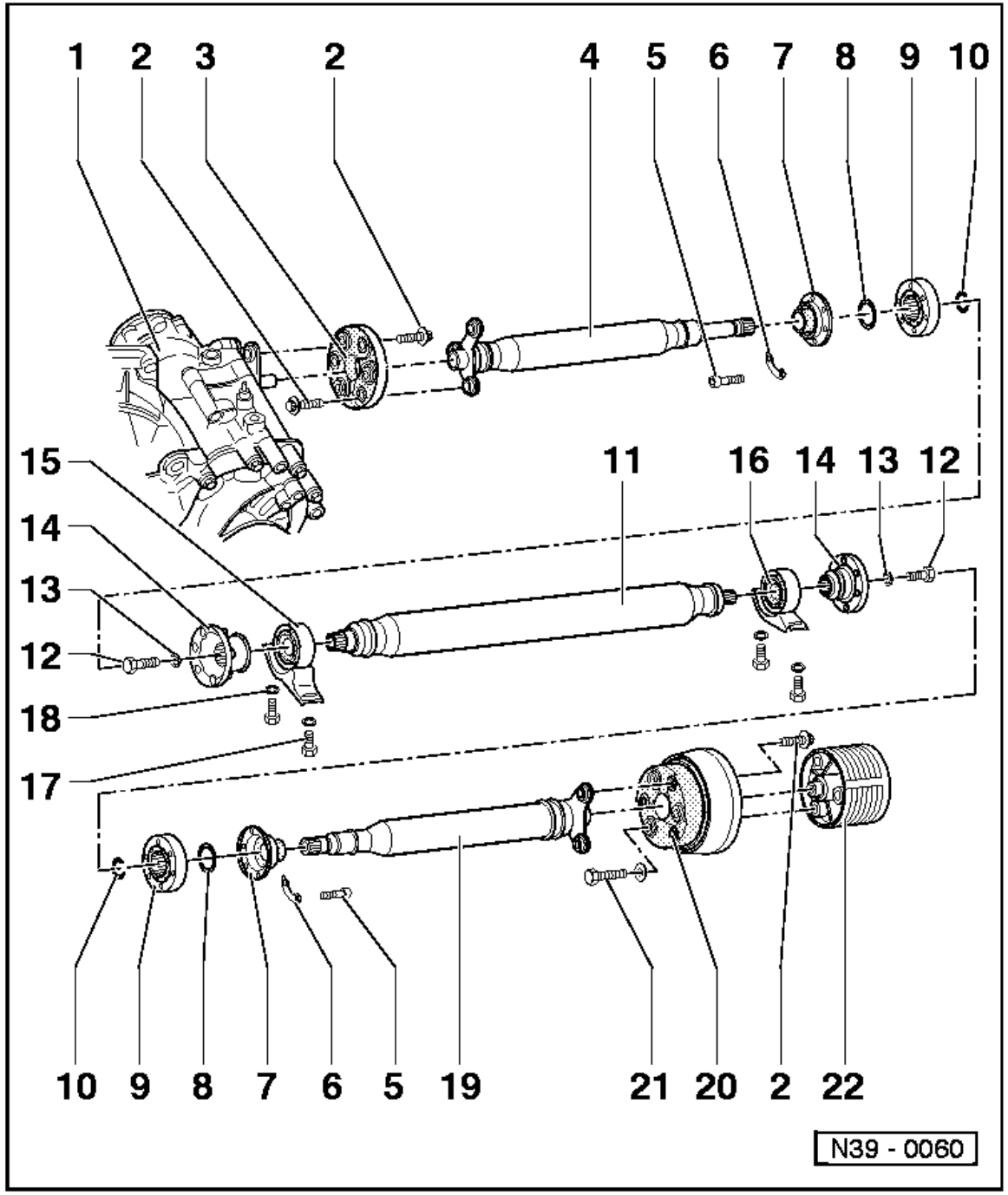

1 - Gearbox with bevel box

2 - 12 point collared bolt, 45 Nm
◆ Bolt length 42 mm

Note:

Do not use hexagon bolts.

3 - Flexible coupling/heat shield
◆ Renewing:
- Separate exhaust system at joint between front exhaust pipe and catalyst, remove heat shield above catalyst

=> Repair group 26; Removing and installing parts of exhaust system=>
- Remove centre propshaft (item11)
- Remove flexible coupling/heat shield from front propshaft and bevel box output flange

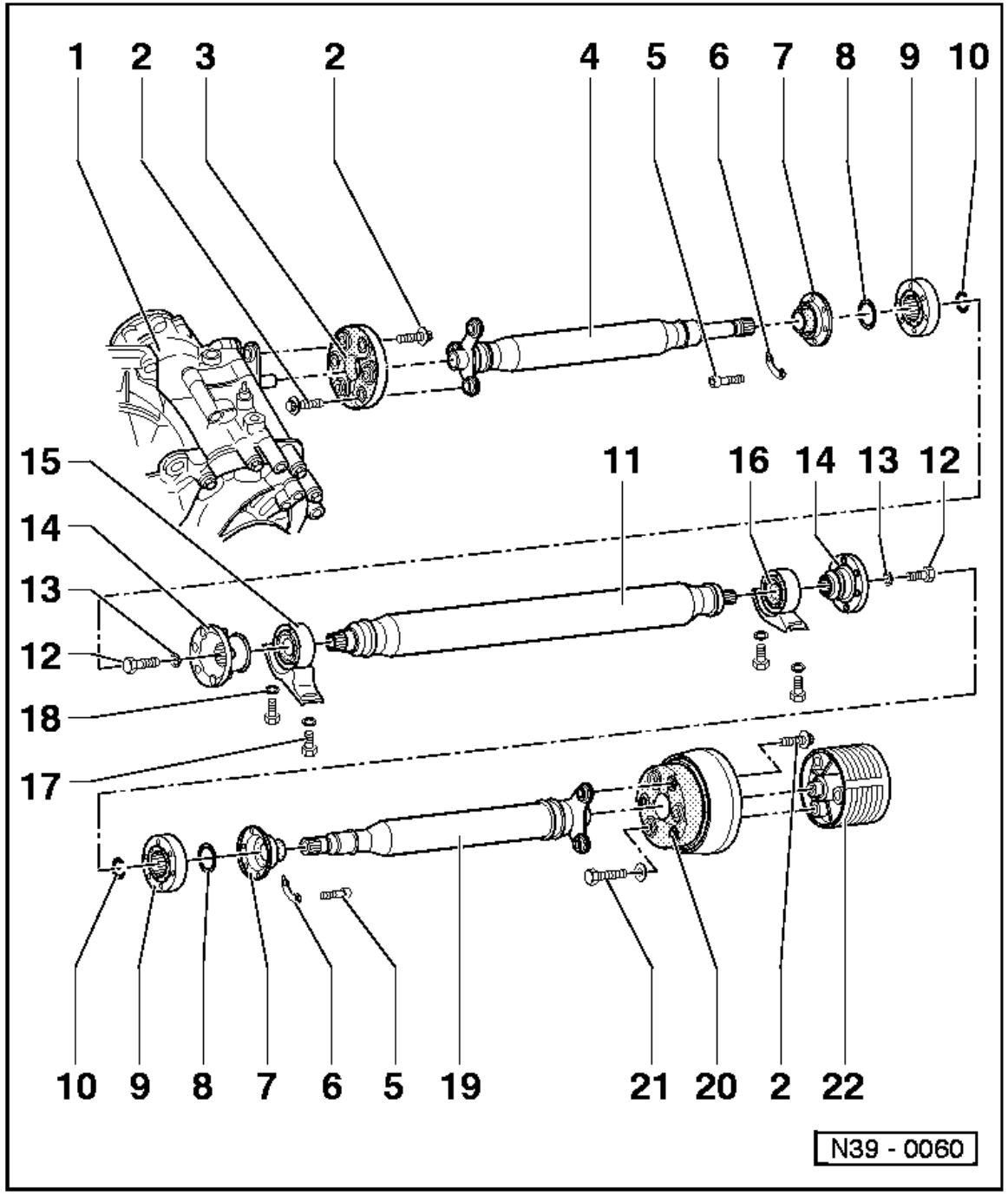

4 - Front propshaft

- Do not damage centralizing sleeve and flange centre seal when removing and installing =>Page 39-84

5 - Socket head bolt, 40 Nm

6 - Lock plate

7 - Constant velocity joint boot

- Drive off with a drift before pressing CV joint off
- Check for damage

8 - Dished washer

- Inner diameter serrated
- Installation position: Large diameter lies against CV joint

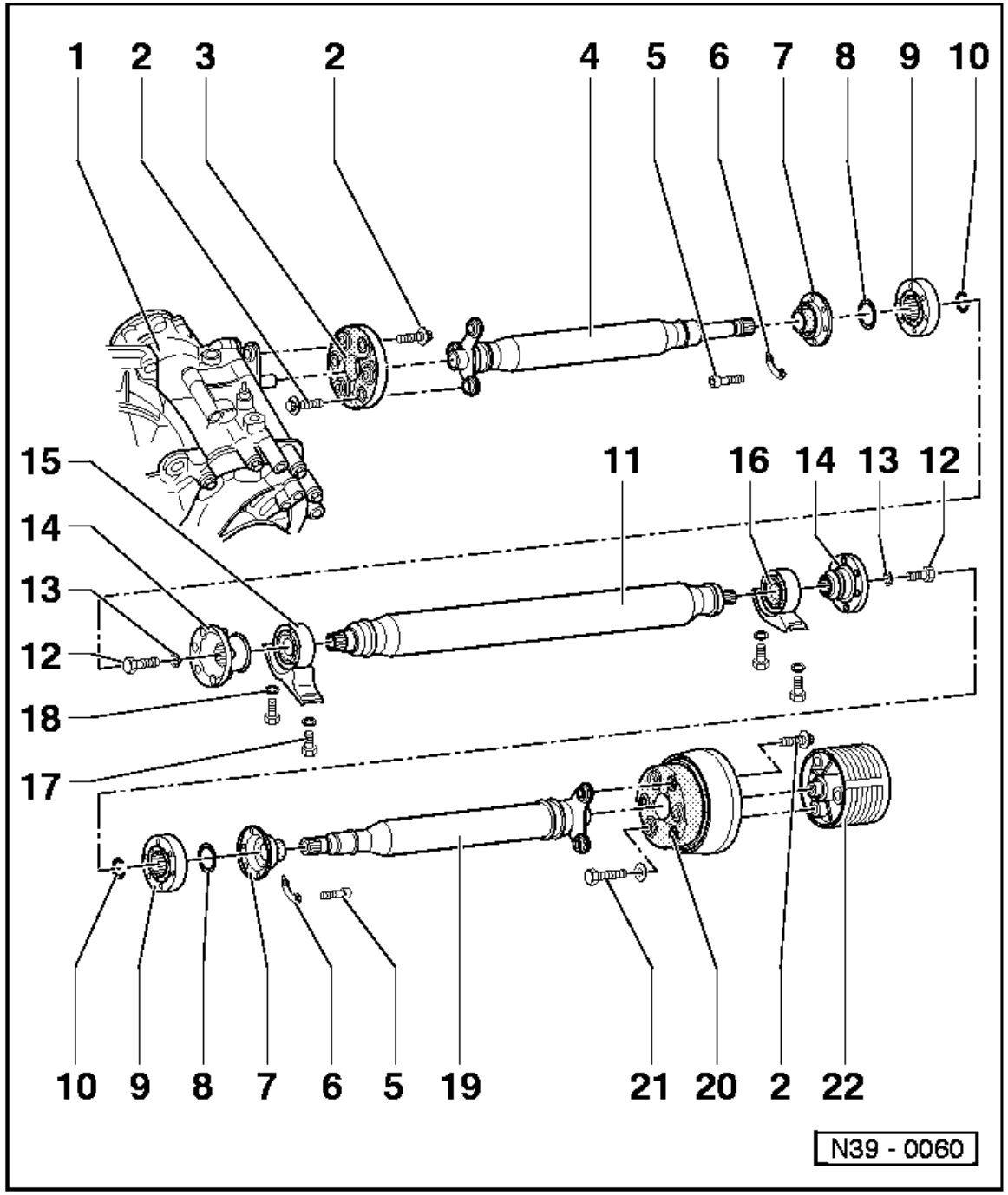

9 - Constant velocity joint

- ◆ Pressing off => Fig. 1
- ◆ Pressing on => Fig. 2
- ◆ Installation position: Groove on outside diameter faces towards centre propshaft
- ◆ Greasing:
  Press 25 g of G-6.3 grease into joint from each side (50 g in total), when renewing boot re-grease joint if necessary

10 - Circlip

- ◆ Renew
- ◆ Remove and install with circlip pliers VW 161 a

11 - Centre propshaft

12 - Hexagon bolt, 45 Nm

13 - Washer

- ◆ Always renew

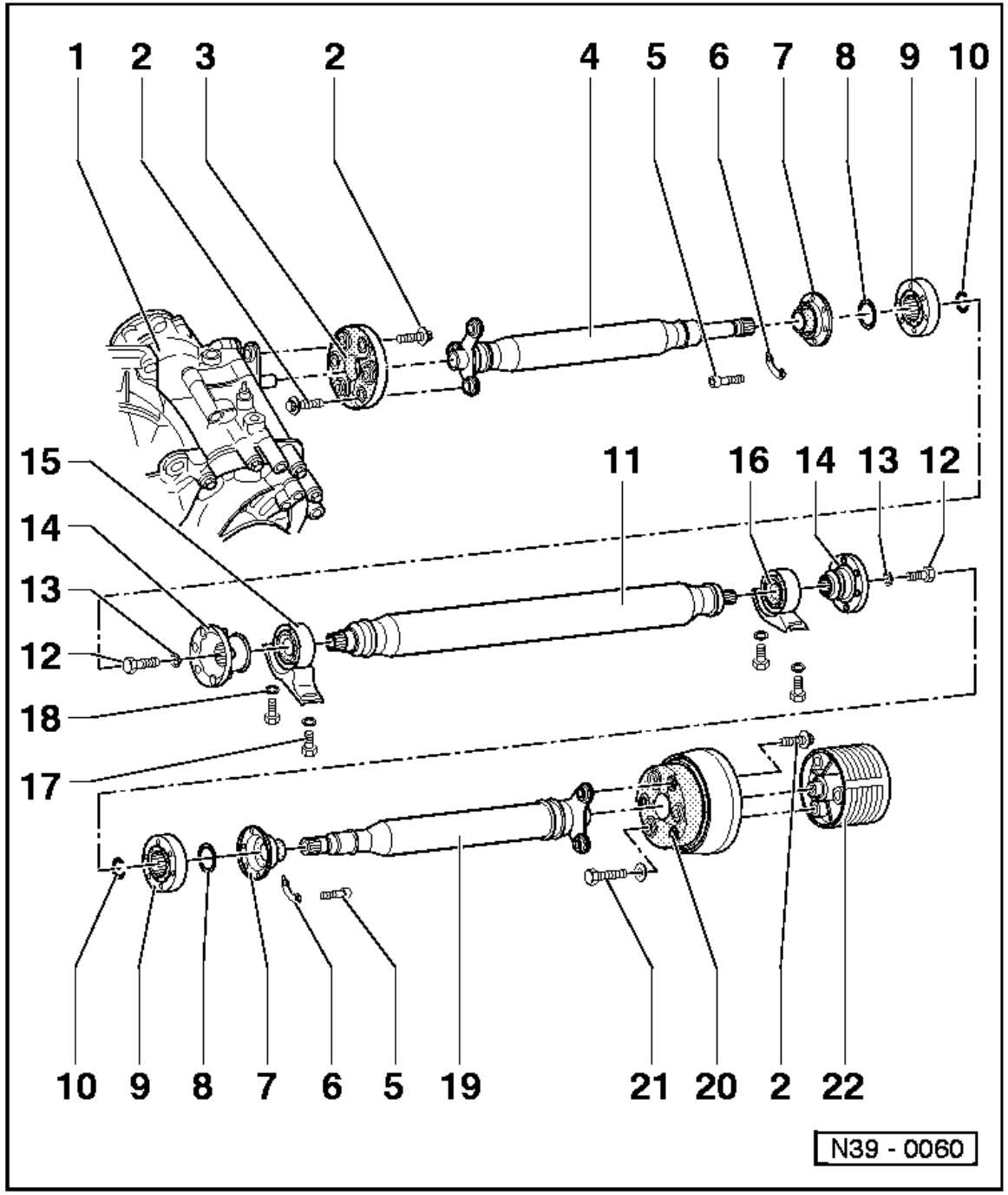

14 - Flange

- ◆ Pulling off => Fig.3
- ◆ Pulling on => Fig.4

15 - Front intermediate bearing

- ◆ Pulling off => Fig. 5
- ◆ Driving on => Fig.6
- ◆ Installation position: Inscription points towards centre propshaft

16 - Rear intermediate bearing

- ◆ Pulling off => Fig. 5
- ◆ Driving on => Fig.6
- ◆ Installation position: Inscription points towards centre propshaft

Note:

Removing and installing propshaft intermediate bearing ventilation pipe

=> *Page* 34-23and 34-46

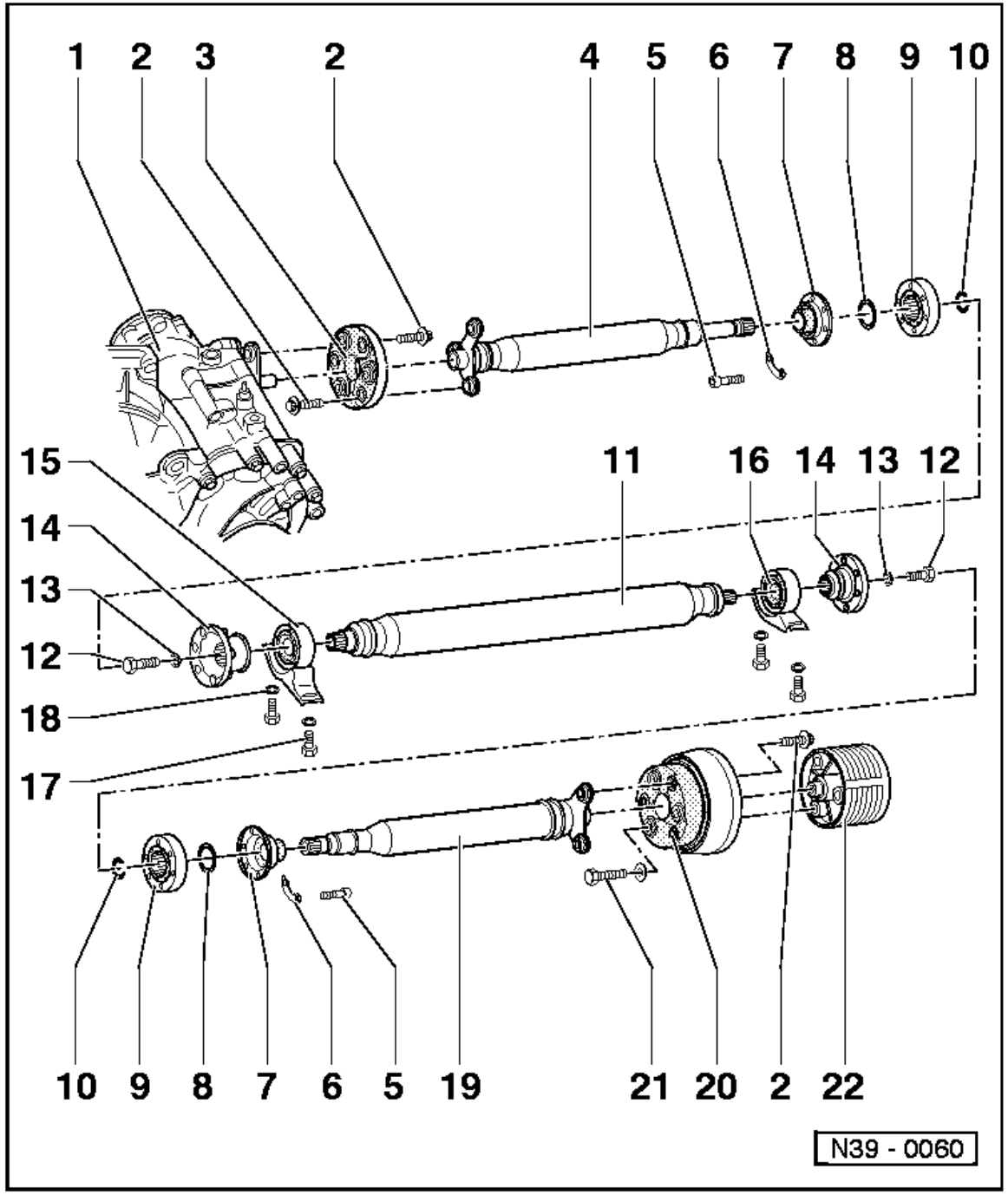

17 - Bolt, 25 Nm

18 - Washer

19 - Rear propshaft

◆ Do not damage centralizing sleeve and flange centre seal when removing and installing =>Page 39-84

20 - Flexible coupling with balance weight

◆ Three projecting sleeves in each case engage in the mounting holes of the viscous coupling and propshaft

21 - Hexagon bolt with washer, 60 Nm

◆ For securing flexible coupling with balance weight to viscous coupling (item 22)

22 - Viscous coupling

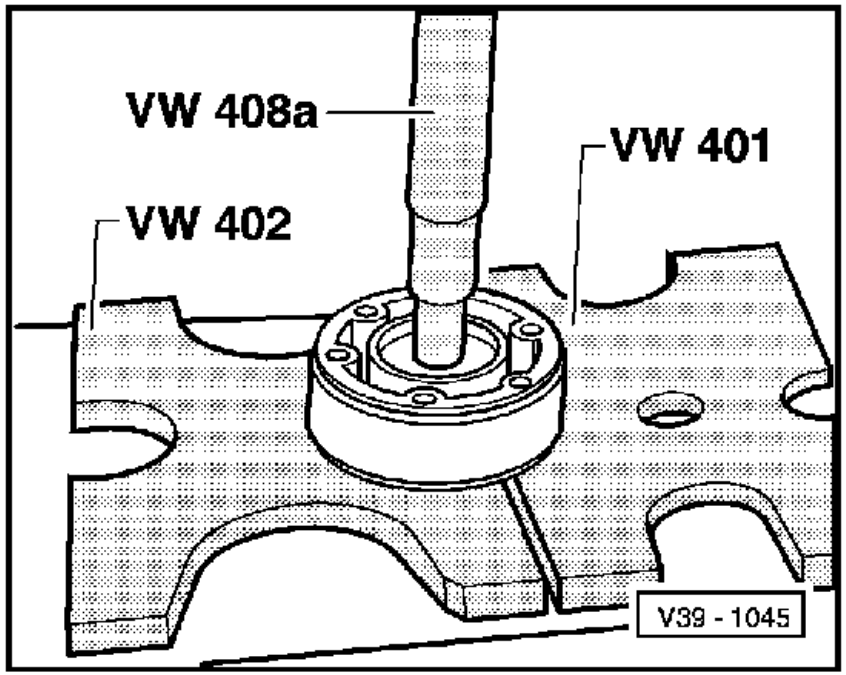

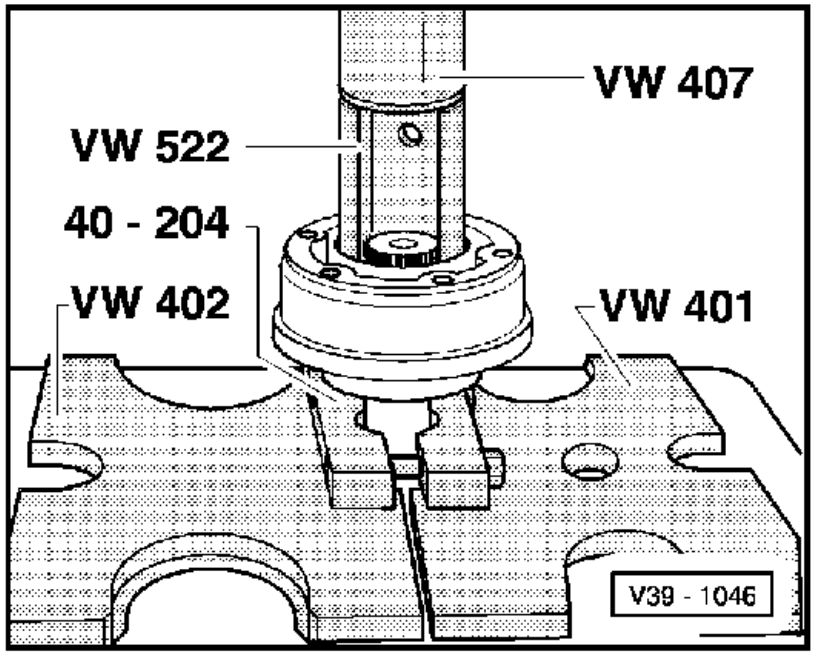

⇦ **Fig.2Pressing constant velocity joint on**

- Press on carefully.

- Tighten tensioner 40 - 204 securely, the propshaft must not be pushed down within the tensioner, otherwise paintwork damage will occur.

- Repair paintwork damage as follows if necessary:
  Remove grease remains with Nitro thinner L 001 600.
  Apply 2-component acrylic paint (ALN 769 041 with hardener ALZ 009 001).

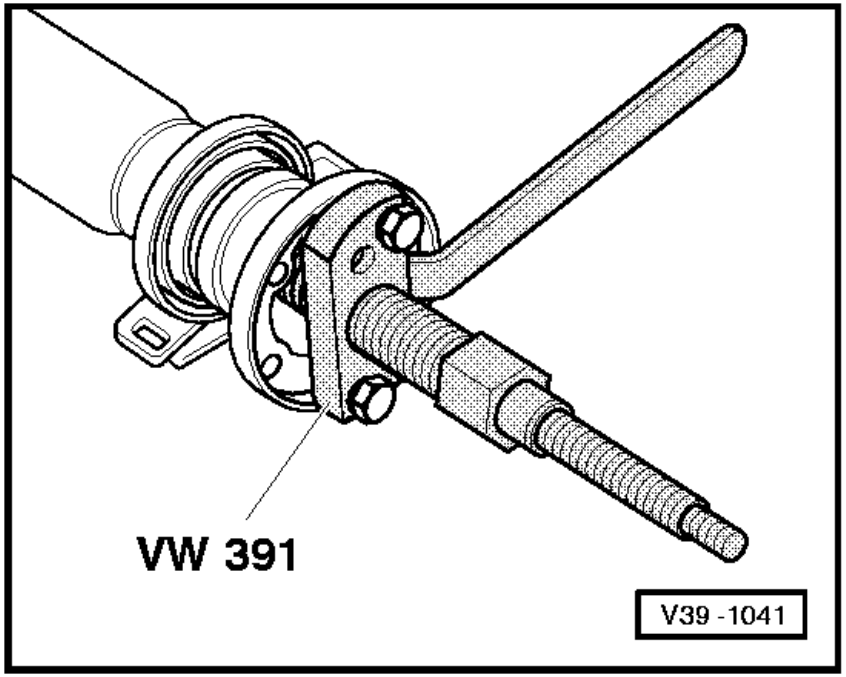

⇦ **Fig.3Pulling flange off**

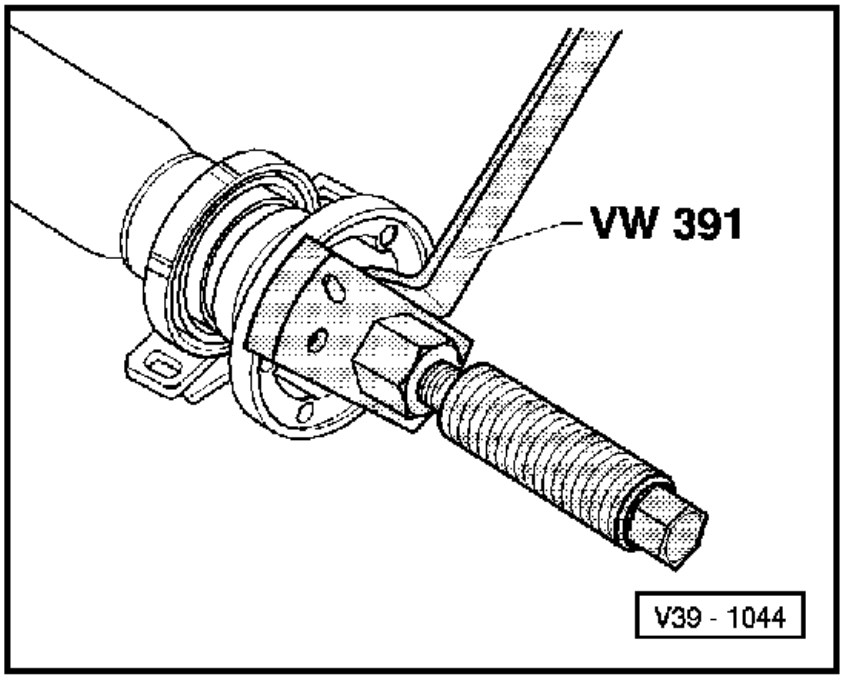

⇦ **Fig.4Pulling flange on**

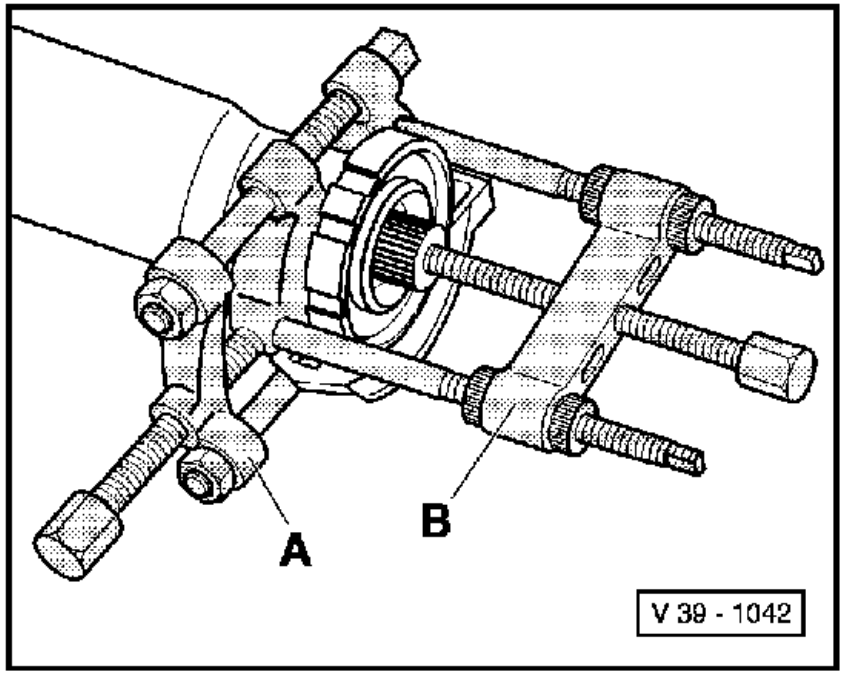

⇦ **Fig.5Pulling intermediate bearing off**

A -	Separating tool 12...75 mm e.g. Kukko 17/1
B -	Puller, e.g. Kukko 18/0

Note:

When using a two-arm puller, first cut the rubber guide and then remove the metal cover.

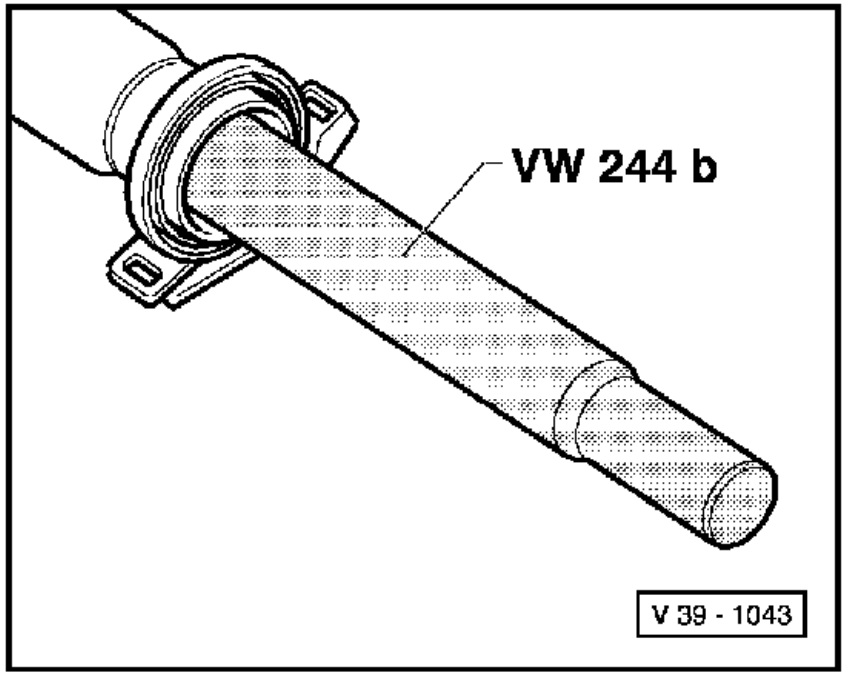

⇦ **Fig.6Driving intermediate bearing on**

- Drive intermediate bearing onto stop.