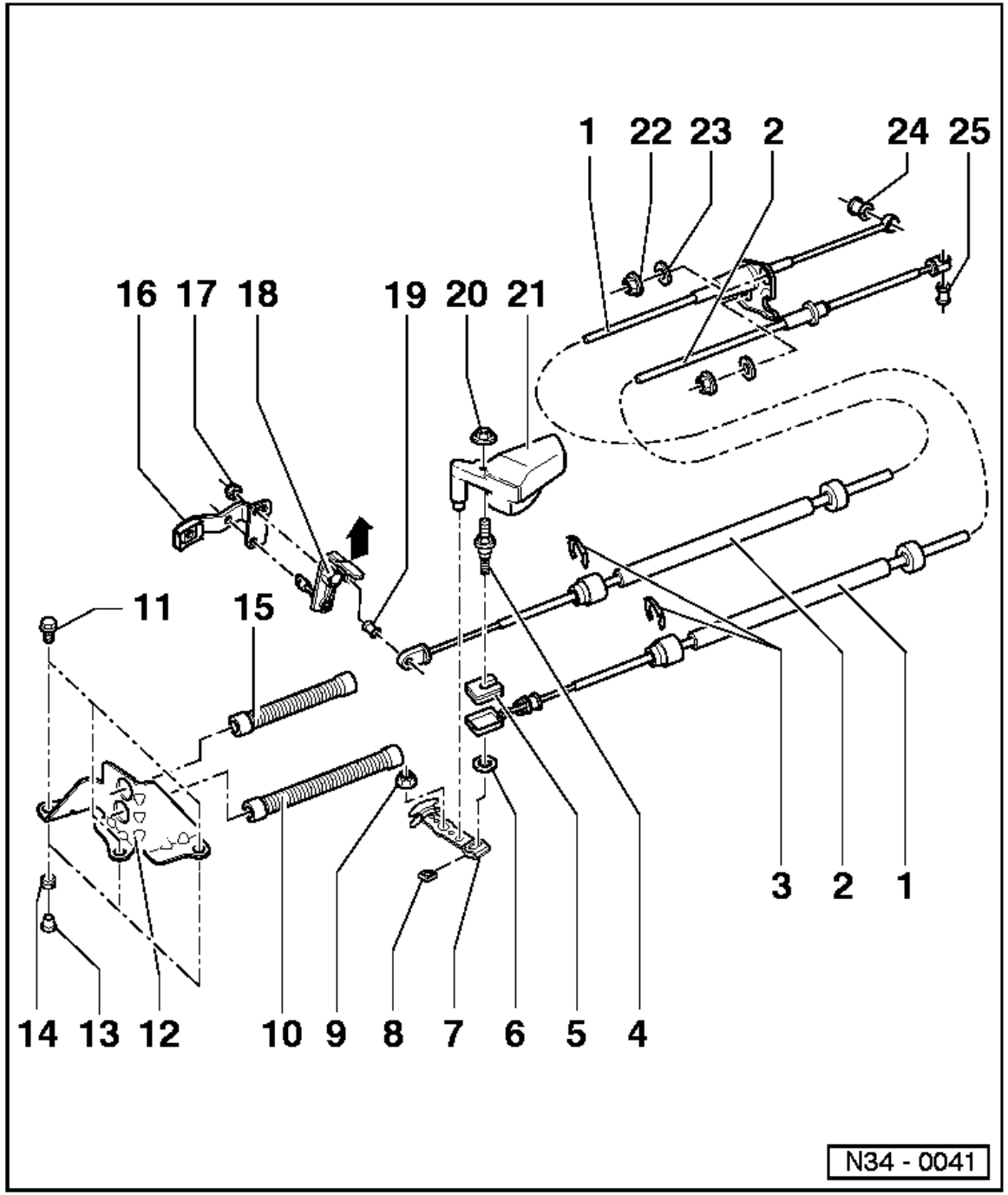

Note:

Lubricate all mountings and contact surfaces with MoS2 grease.

1 - Gear selector cable
- ◆ Installation position => Page 34-1

2 - Gate selector cable
- ◆ Pull off actuating arm (item18) by pulling lug in direction of arrow
- ◆ Installation position => Page 34-1
- ◆ Install before installing gear selector cable

3 - Circlip
- ◆ When removing do not damage bellows

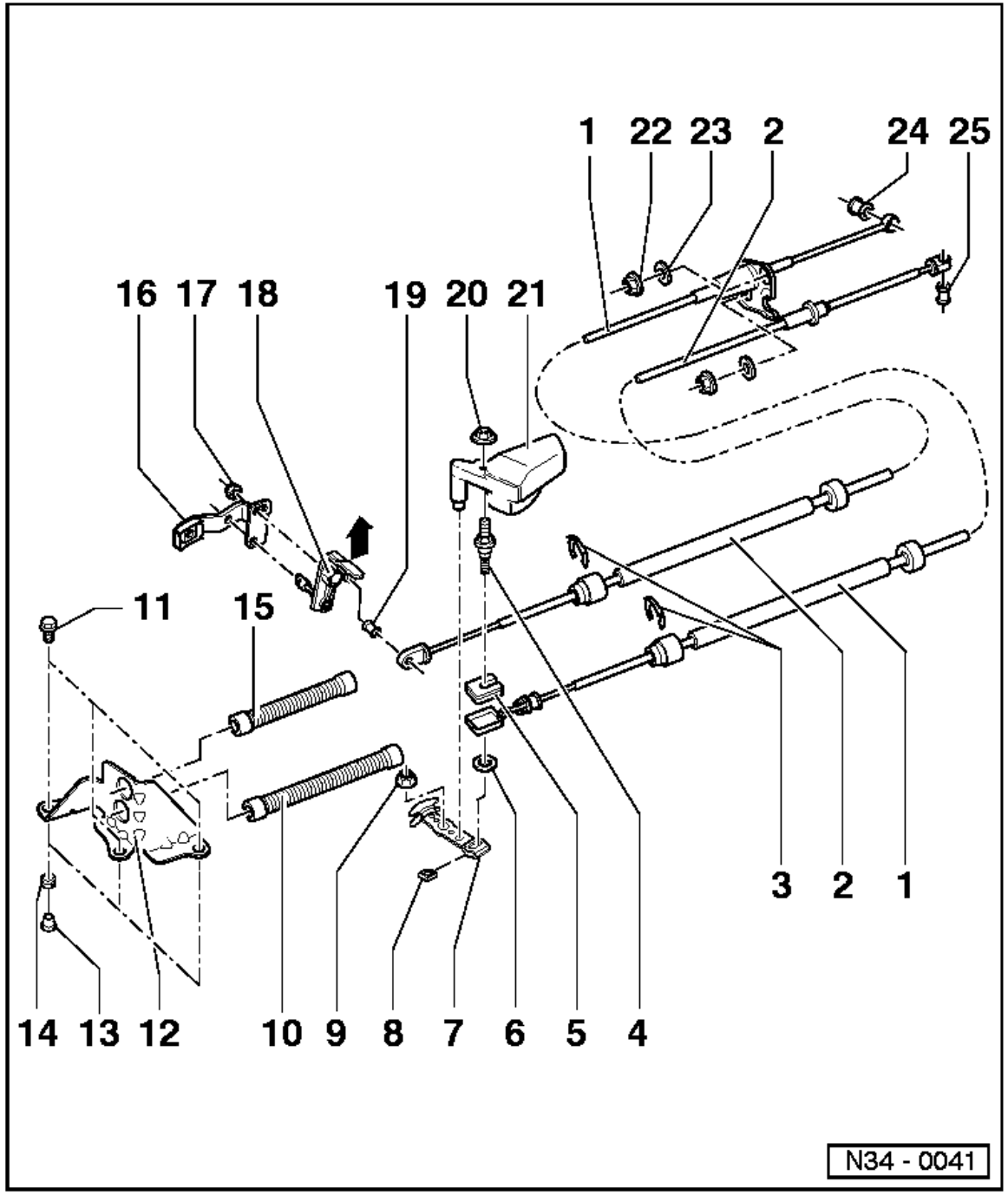

4 - Hexagon combi bolt, 25 Nm
- ◆ With shoulder
- ◆ Gear selector cable to gear change lever

5 - Rubber bush
- ◆ For gear change cable to gear selector lever
- ◆ To renew bellows press out of end piece

6 - Washer
- ◆ Install between gear selector cable and gear selector lever

7 - Gear selector lever
- ◆ Only fits in one position
- ◆ After installing adjust gear selector mechanism => Page 34-19
- ◆ Installation position => Page 34-9

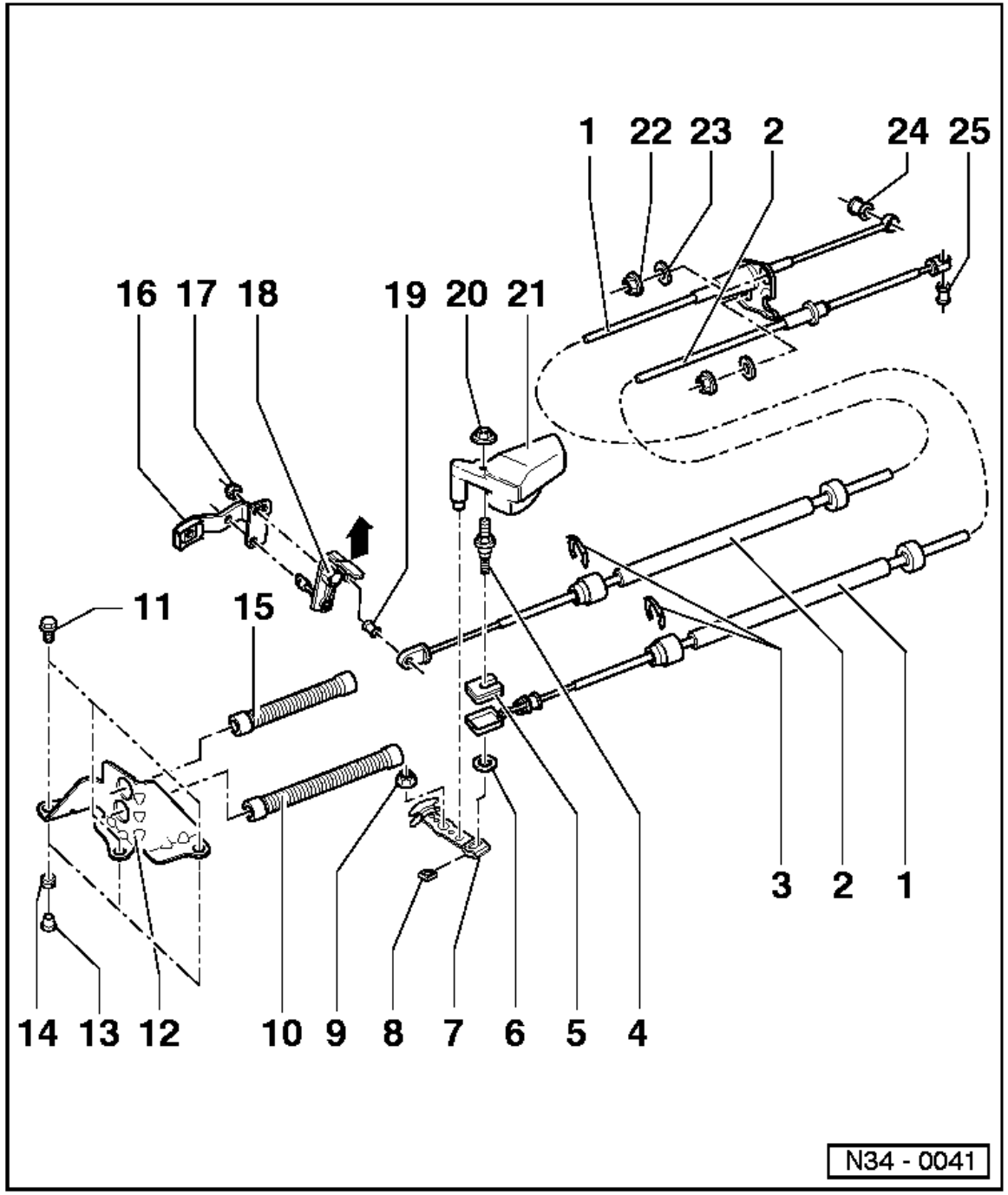

8 - Square nut
- ◆ Insert into gear selector lever

9 - Self-locking hexagon nut, 25 Nm
- ◆ For gear selector lever

10 - Bellows
- ◆ Carefully pull over gear selector cable end piece
- ◆ Use MoS2 grease

11 - Hexagon bolt, 25 Nm
- ◆ For support bracket

12 - Support bracket

13 - Distance piece

14 - Bush
- ◆ Support bracket mounting to gearbox

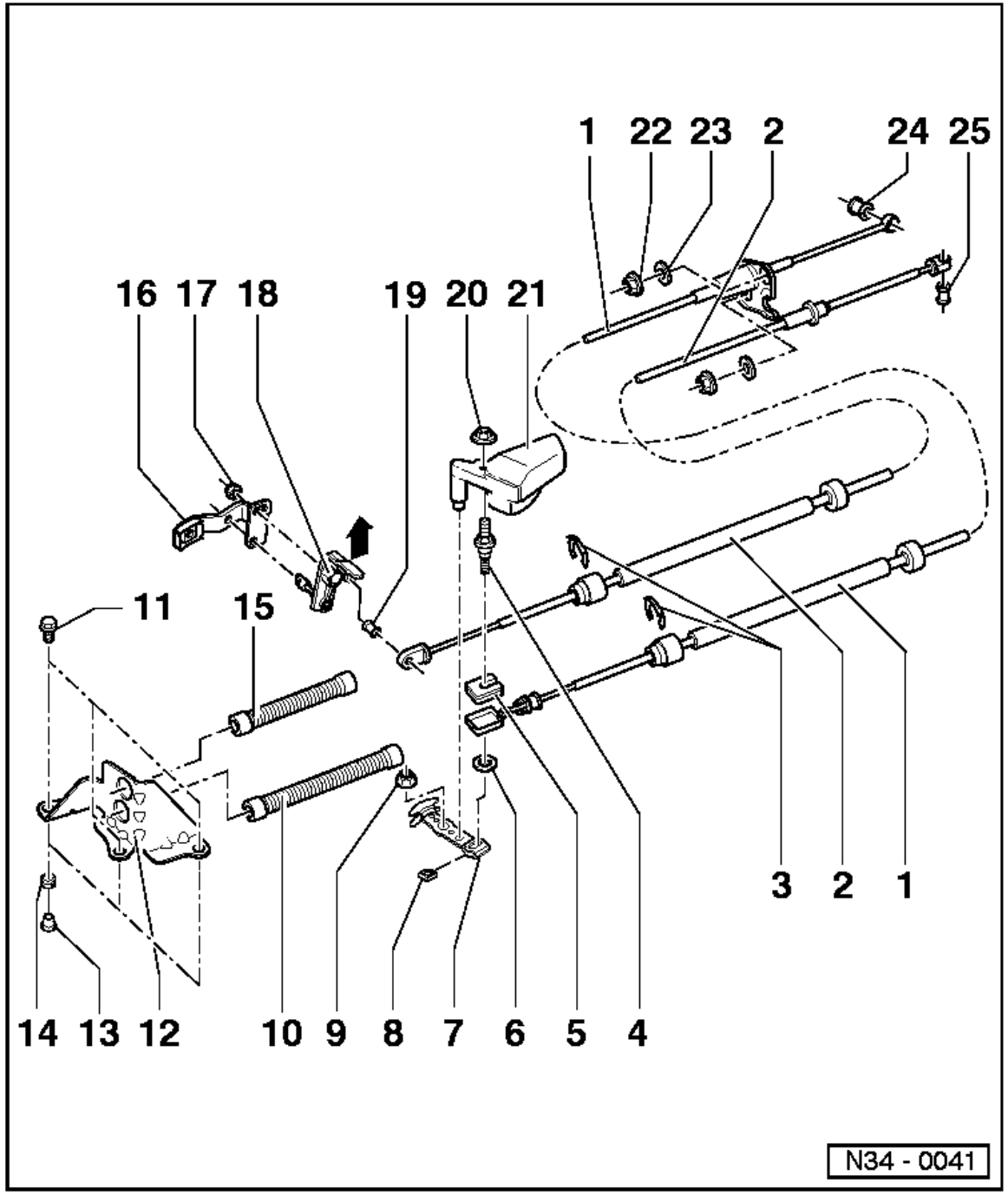

15 - Bellows
- Carefully pull over gear selector cable end piece
- Use MoS2 grease

16 - Relay lever
- Remove before removing clutch control
- Installation position => Page 34-9
- Renewing => Page 34-120

17 - Self-locking hexagon nut, 15 Nm
- For relay lever to actuating arm
- Only loosen to adjust selector mechanism

18 - Actuating arm
- With pivot pin to mount relay lever
- Installation position => Page 34-9
- Renewing => Page 34-120

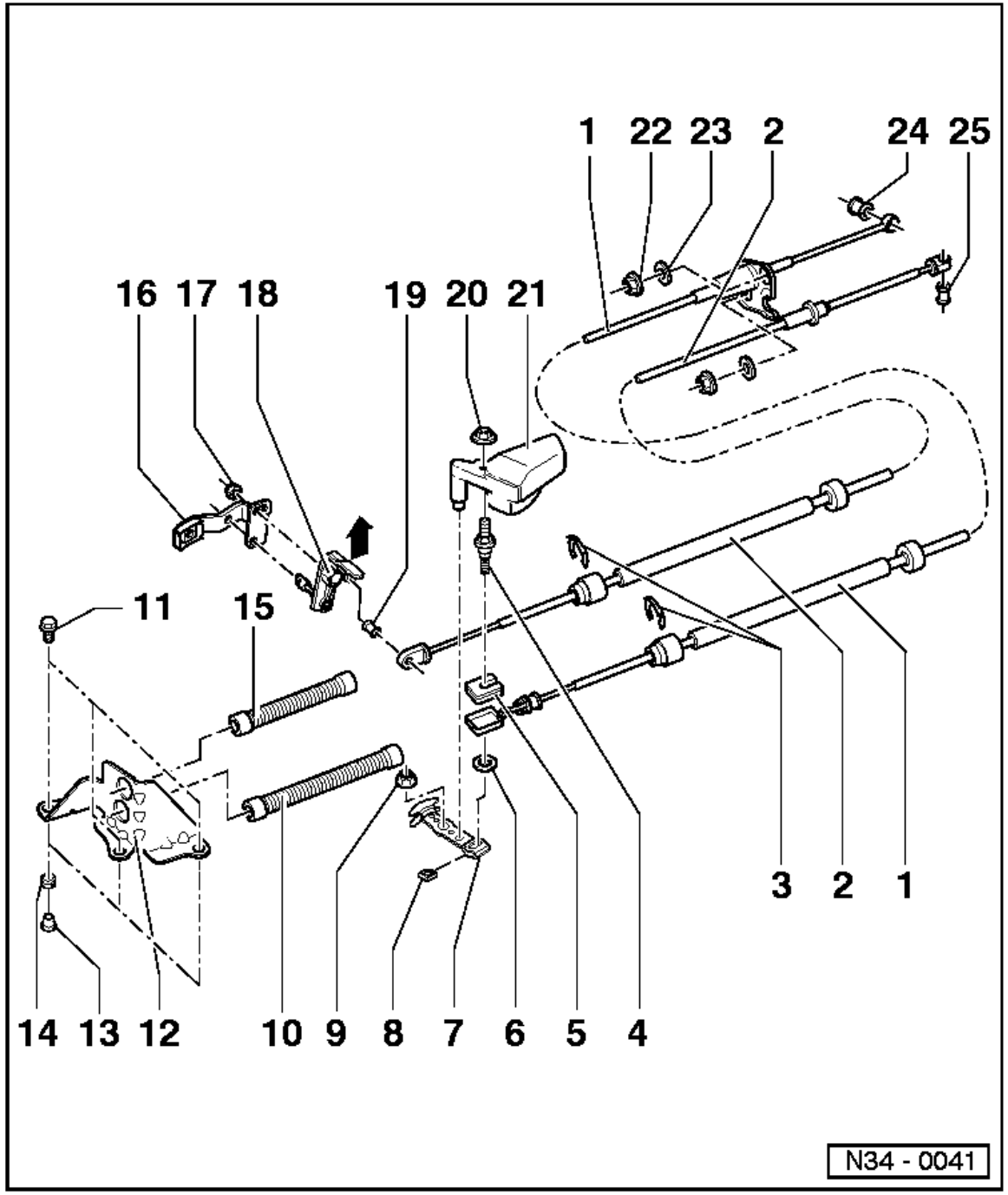

19 - Rubber bush
- ◆ For gate selector cable to actuating arm
- ◆ Press in and out with drift

20 - Self-locking hexagon bolt, 20 Nm
- ◆ For balance weight

21 - Balance weight
- ◆ Remove to adjust selector mechanism

22 - Self-locking hexagon nut, 15 Nm
- ◆ For selector cable to selector housing

23 - Rubber washer

24 - Rubber bush
- ◆ For gear selector cable/gear change lever
- ◆ Press in and out with drift

25 - Rubber bush
- ◆ For gate selector cable/selector bracket
- ◆ Press in and out with a drift

⇦ **Installation position gear selector lever/relay lever actuating arm/balance weight**

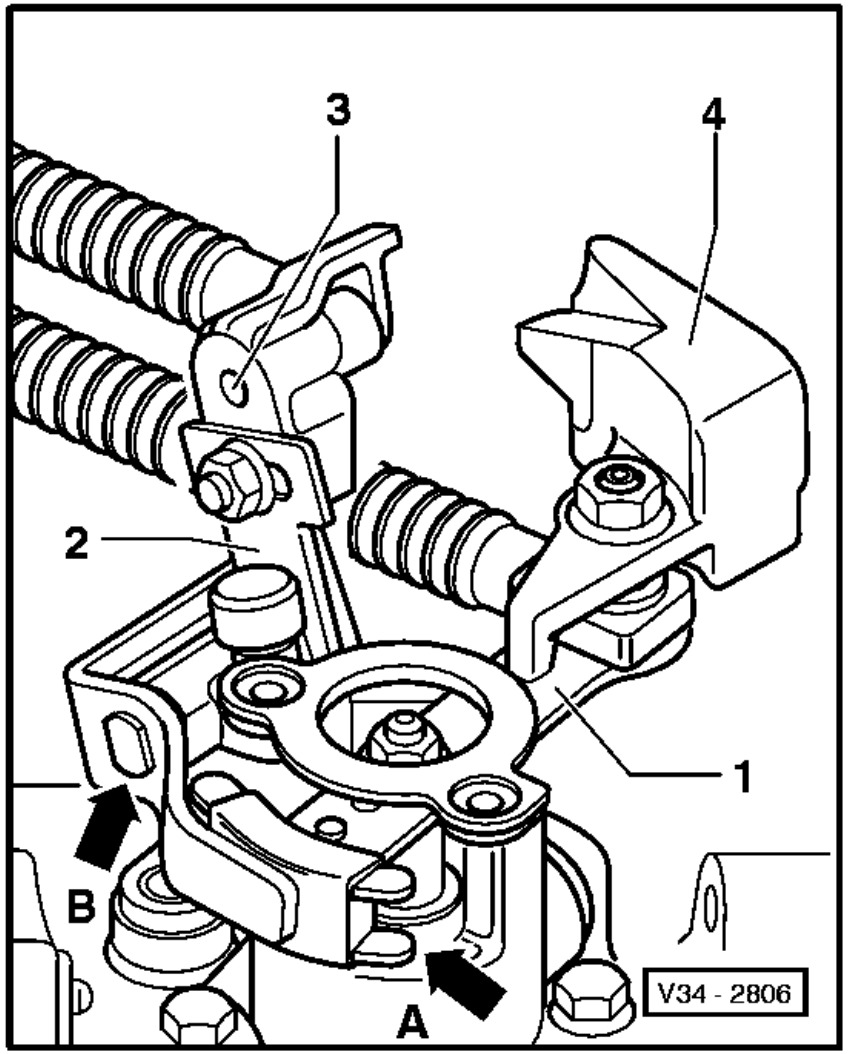

1 -Gear selector lever

2 -Relay lever
Locates in guide rail of gear shift lever (arrow -A-)
Lubricate with MoS2 grease

3 -Actuating arm
Flats (arrow -B-) of axis face mounting, relay lever only fits in one position

4 -Balance weight
Bolt on to gear selector lever

Note:

For ease of illustration the linkage and switch for reverse light have been removed.