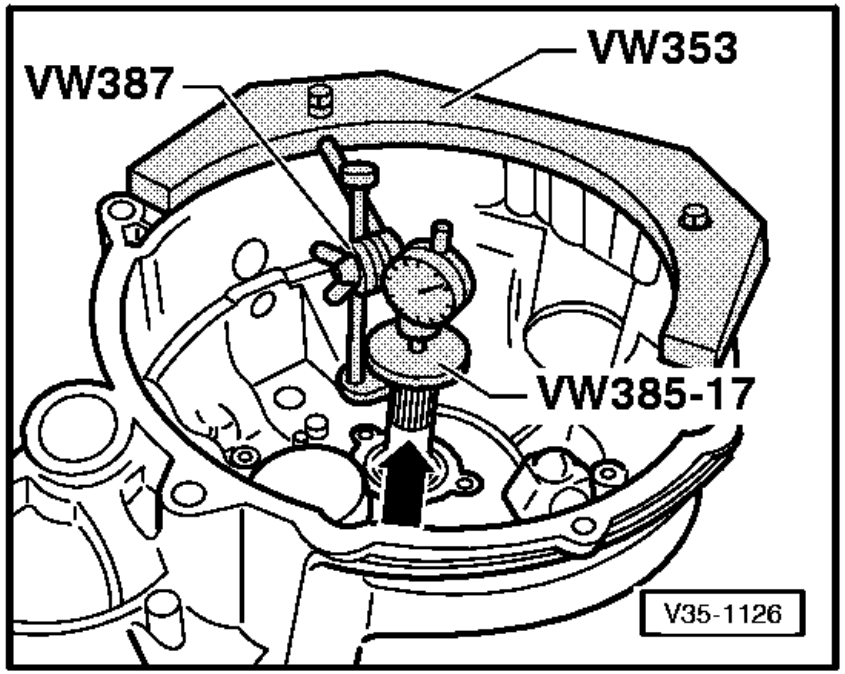

⇦ - Install measuring appliance and D.T.I.

- Rotate input shaft so that the taper roller bearing settles.

- Press input shaft in direction of arrow.

- Bearing play should be min. 0.01 ... max. 0.09 mm.

Note:

If the bearing clearance cannot be measured, but input shaft play is perceptible and the input shaft turns freely, the adjustment is acceptable.

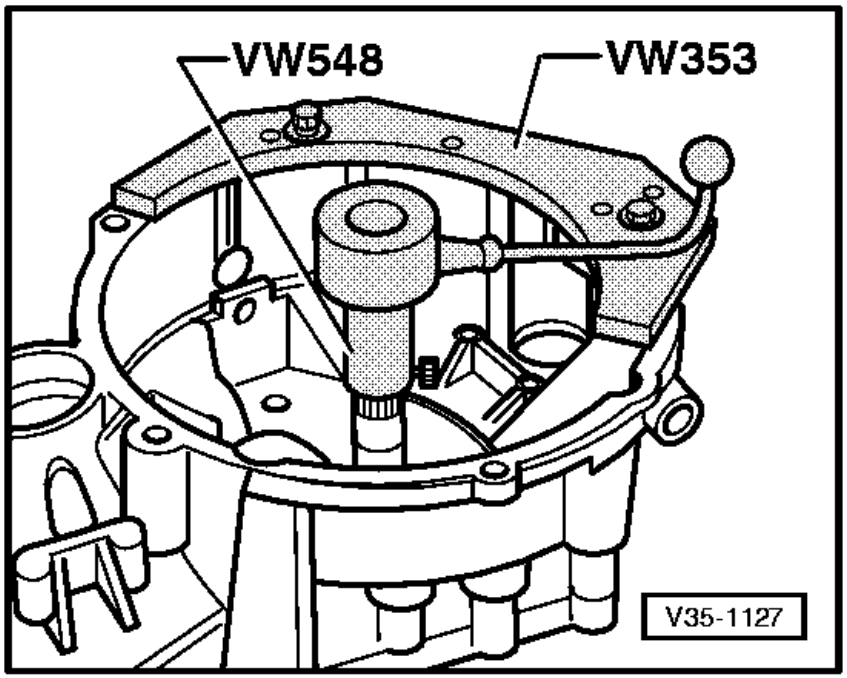

⇦ - Frictional moment (bearing preload) max. 20 Ncm.