**Assembly overview - Pedal cluster**

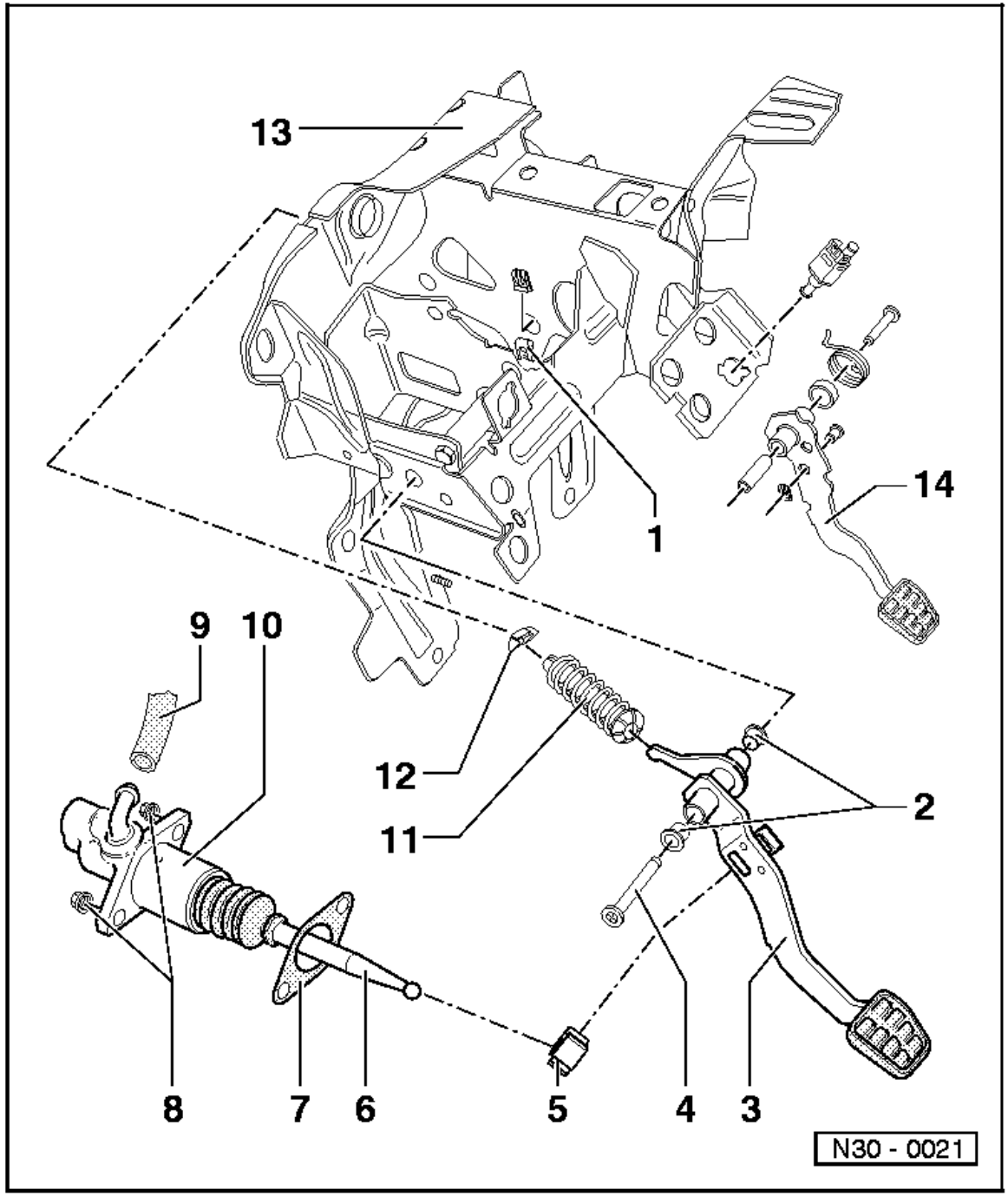


**1 - Locking clip**

**2 - Pivot pin for clutch pedal**
- ◆ Knock out with drift

**3 - Mounting bush**
- ◆ Check for wear, renew if necessary
- ◆ Drive out with drift 3121
- ◆ Press in by clamping in vice, use vice clamps

**4 - Clutch pedal**
- ◆ Removing and installing
  => Page 30-7

**5 - Retainer**
- ◆ Removing and installing
  => Page 30-11

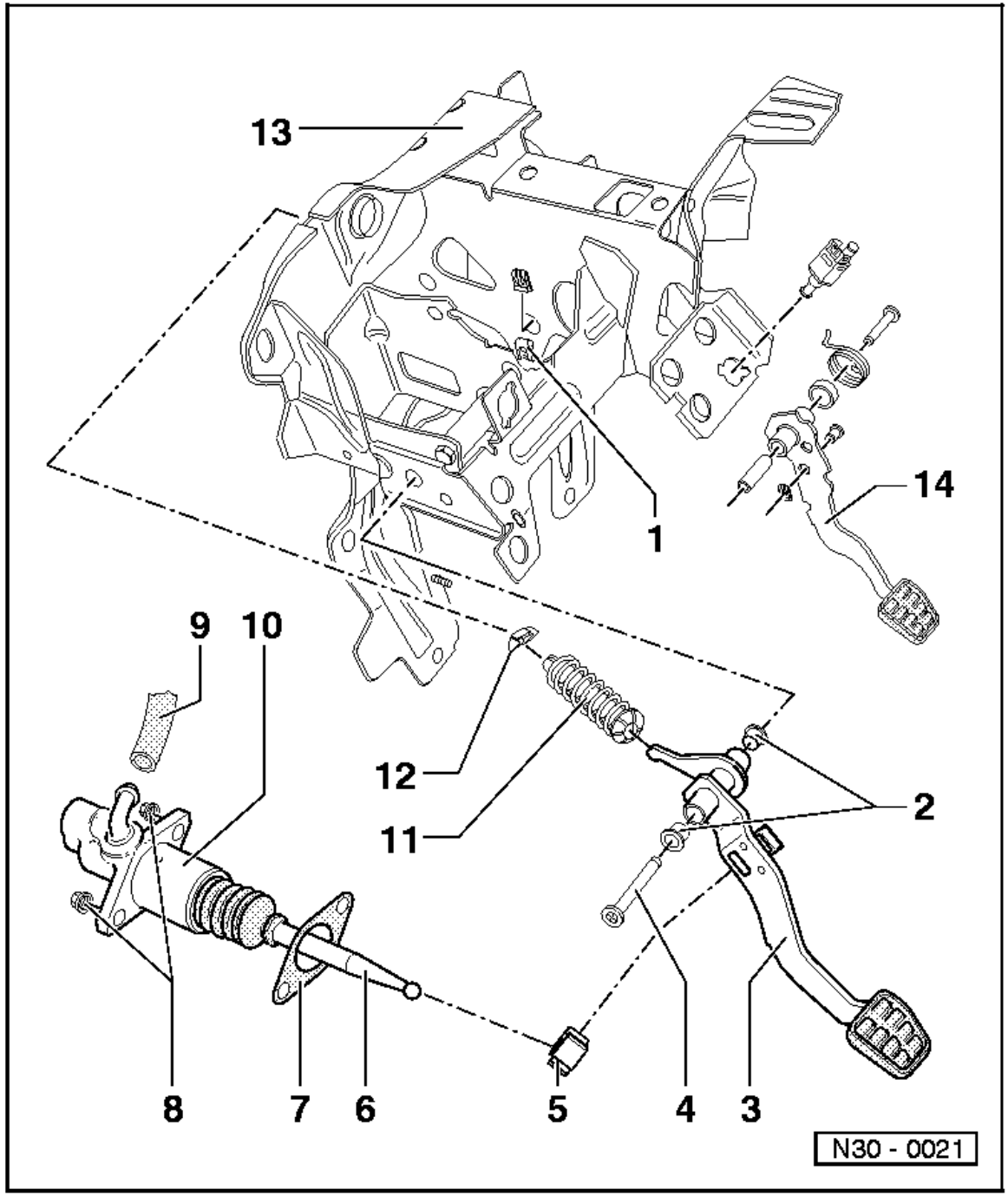


**6 - Clutch operating rod/master cylinder**

**7 - Seal**
- ◆ Always renew

**8 - Self-locking hexagon nut, 25 Nm**
- ◆ Always renew

**9 - Supply hose**

**10 - Master cylinder**
- ◆ Removing and installing
  =>Page 30-12

**11 - Over-centre spring**
- ◆ Removing and installing
  =>Page 30-5

**12 - Over-centre spring mounting**
- ◆ Install in mounting bracket

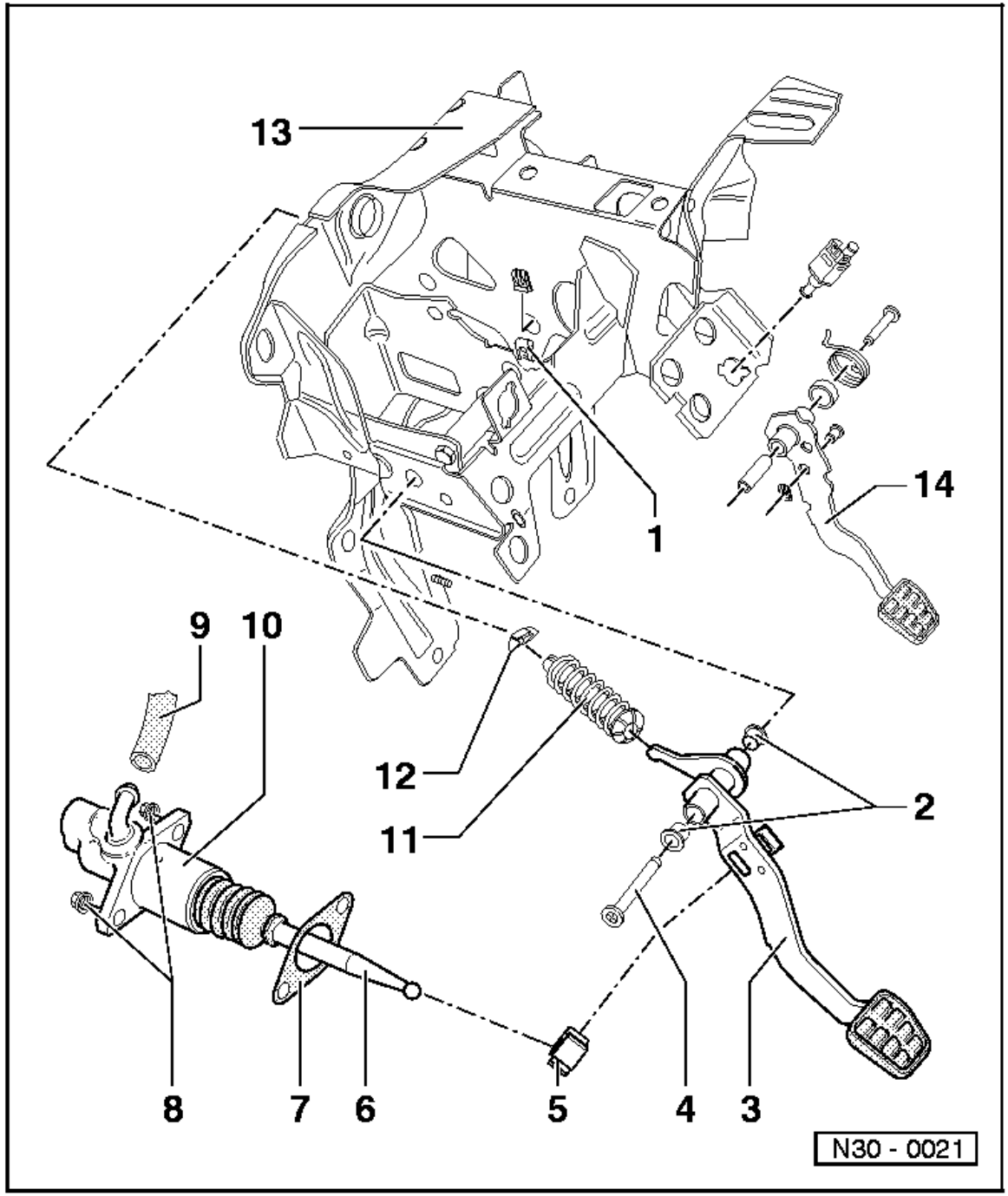


**13 - Mounting bracket**

◆ Always renew self locking securing nuts on mounting bracket to stud/brake servo -25 Nm-

**14 - Brake pedal**