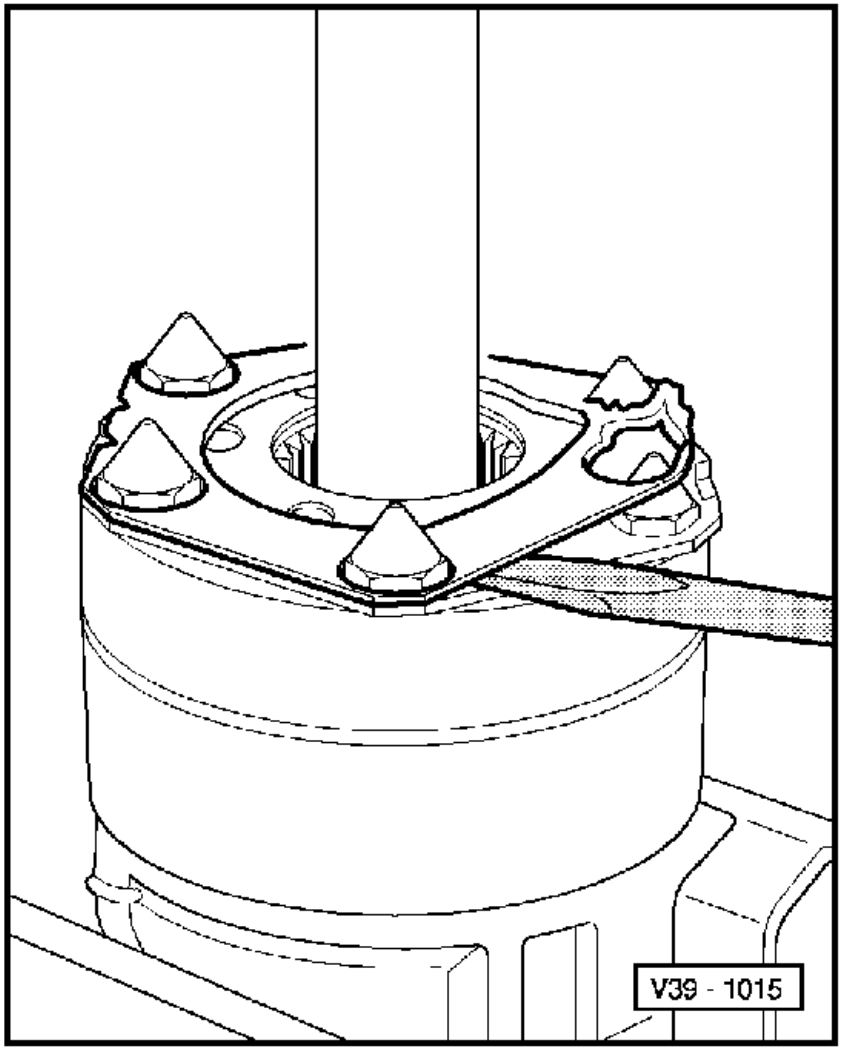

Removing

- Clamp differential with freewheel in vice.

⇦ - Lever off locking plate.

- Remove bolts with conical heads and take off with retainer plate.

- Drive freewheel off differential housing using a drift on opposing sides.

- Press out circlip for long output shaft on sunwheel if necessary.

- Take out long output shaft, retaining plate and spacer sleeve if necessary.

Installing

- Insert spacer sleeve and retainer plate. Align retaining plate to threaded drillings in differential housing.

- Install long output shaft.

- Align freewheel and place on, fit retaining plate.

- Install bolts with conical head and tighten to torque setting.

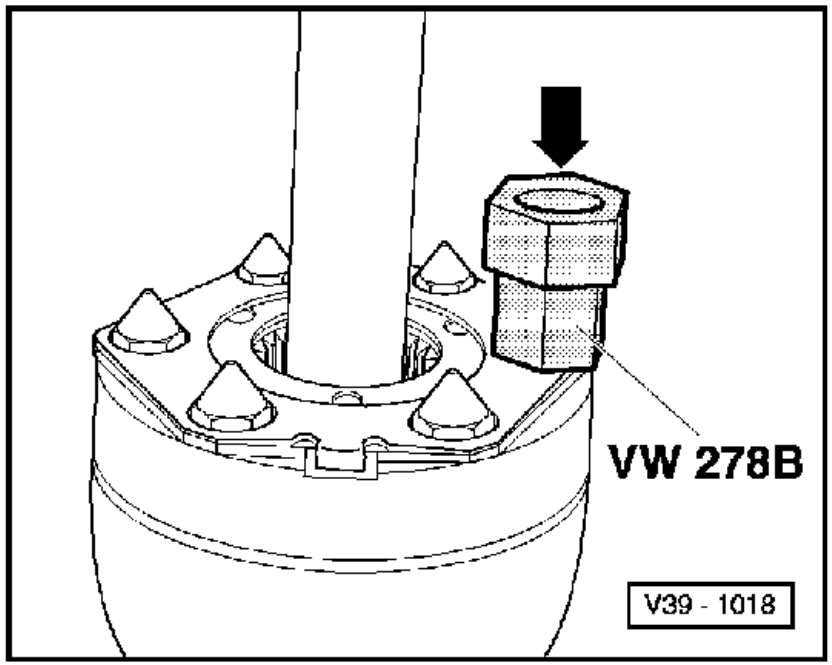

⇦ - Fit new locking plate and drive over using opposite sequence onto bolt hexagon head with setting tool VW 278 B. If necessary rework individual areas on lock plate using a drift.

- Bend both locking plate tabs around retaining plate.