To ensure perfect and successful gearbox repairs, the greatest care and cleanliness as well as the use of good and proper tools is essential. Obviously, the basis rules for safety are also applicable during repair work.

A number of generally valid instructions applicable for the various repair procedures - which were previously repeated a number of times at numerous places in the Workshop Manual - are summarized here. They apply to this Workshop Manual.

Gearbox

◆ When installing ensure that the dowel sleeves between the engine and gearbox are correctly located.

◆ When changing a gearbox, bevel box or rear final drive fill with gear oil up to lower edge of filler hole.

◆ Capacities and specifications => Page 00-3.

Notes:

◆ If the oil level is topped up with the manual gearbox/bevel box installed, carry out oil level check as follows:

◆ Fill with oil to the lower edge of the filler hole and refit filler plug. Start engine, engage a gear and allow gearbox to turn for approx. 2 minutes. Switch off engine and again top-up oil to lower edge of filler hole.

Gaskets, sealing rings

◆ Thoroughly clean joint surfaces and apply sealant AMV 188 200 03.

◆ Apply sealant uniformly but not too thick.

◆ Renew "O-rings".

◆ Radial shaft oil seals.

Before installing:

Lightly oil outer edge, fill space between sealing lips with grease.

After installation:

◆ Checking oil level in manual gearbox with bevel box
=> Page 34-79.

◆ Checking oil level in rear final drive
=> Page 39-111.

Locking devices

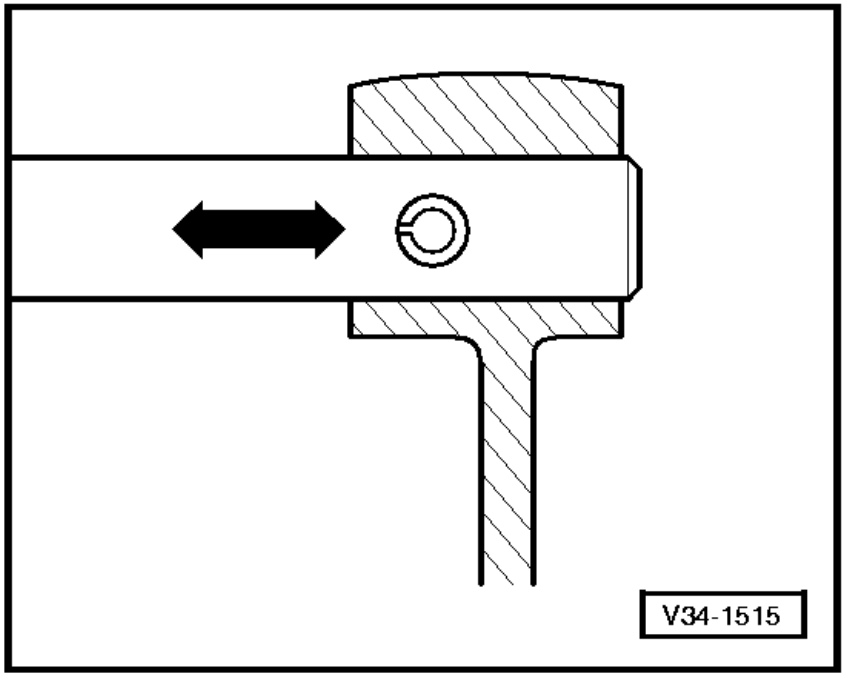

◆ Renew circlips.

◆ Do not overstretch circlips.

◆ Circlips must locate properly in the groove.

⇦ ◆ Renew spring pins
Installation position: Slot longitudinal to line of force.

Bolts and nuts

◆ Tighten and loosen bolts and nuts for securing covers and housings in a diagonal sequence.

◆ Especially delicate parts, such as clutch pressure plates, must not be distorted. Loosen and tighten nuts and bolts in stages in a diagonal sequence.

◆ Tightening torques as specified are for unoiled bolts and nuts.

◆ Renew self-locking bolts and nuts.

Bearings

◆ Install needle bearings with lettered side (thicker metal) towards fitting tool.

◆ Lubricate all gearbox bearings with gear oil before installing. Lubricate with special care when measuring turning torque.

◆ Taper roller bearings fitted to one shaft must be renewed as a set. Use same make of bearings if possible!

◆ Heat inner taper roller bearing races to approx. 100 °C before pressing on.

◆ Do not interchange outer and inner races of bearings of the same size, bearings are paired.

Shims

◆ Measure shims at several points with a micrometer. Tolerance variations make it possible

to find the exact shim thickness required.

- Check for burrs and damage.
- Only install perfect shims.

Synchronizer rings

- Do not interchange. When reusing always fit to the same gear.
- Check for wear and renew if necessary.
- Coat with gear oil before installing.

Gear wheels

- Before installing clean and heat on a hot plate to approx. 100 °C.
- Temperature can be checked with temperature tester V.A.G 1558.