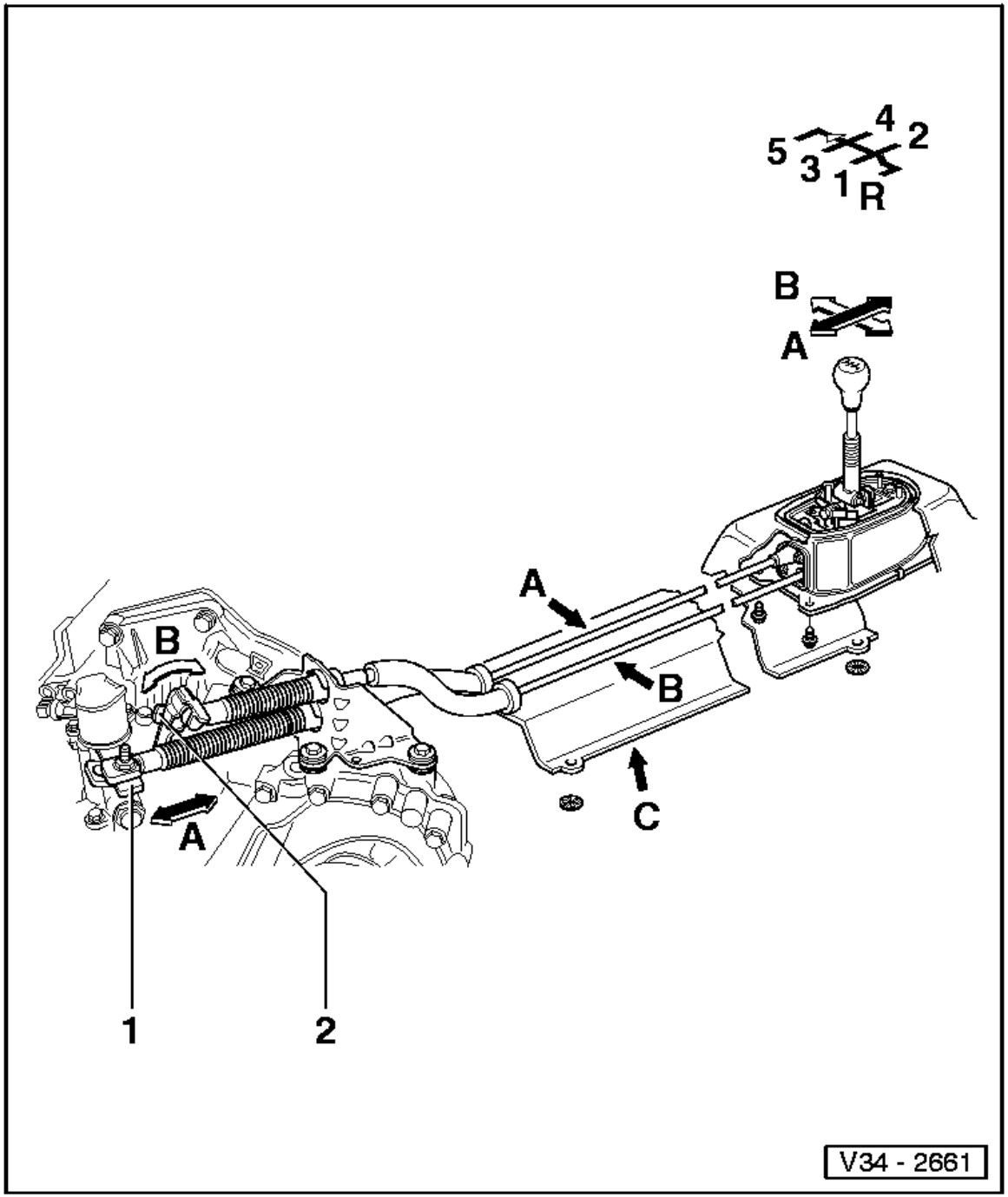

Installation position of gear selector mechanism

- A -Gear change cable

- B -Gate selector cable

- C -Heat shield
- ◆ Holds selector cables in position
- ◆ Remove before removing the gear selector mechanism.

Double headed arrow -A- Gear selection movement

Double headed arrow -B- Gate selection movement

1 - Gear selector lever

2 - Relay lever with actuating arm/gate selector cable

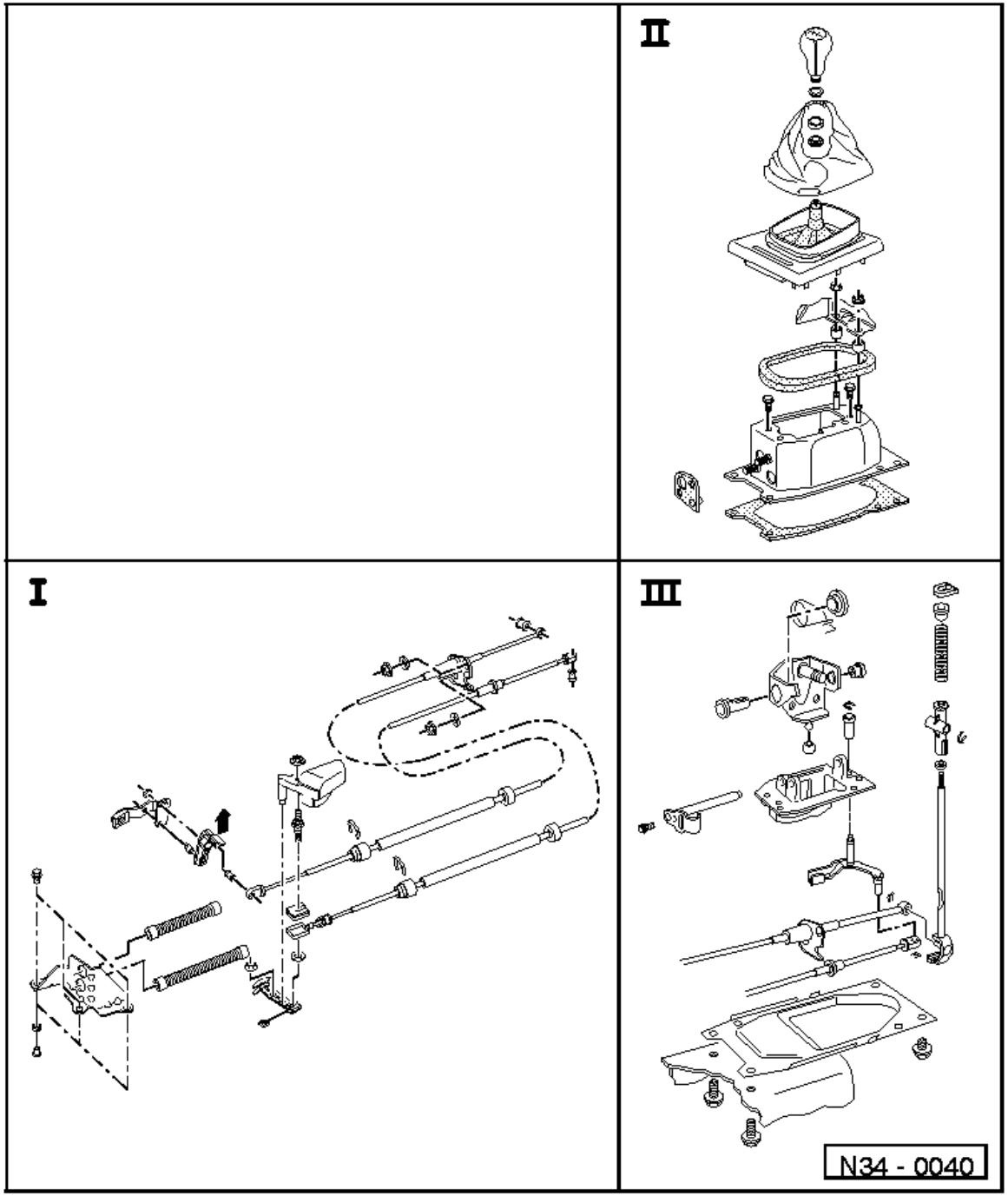

- I -Removing and installing gear selector control cables => Page 34-4

- II -Removing and installing gear stick housing => Page 34-10

- III -Removing and installing gear lever => Page 34-14

- Before removing the gear selector mechanism, remove the following components:

◆ Catalyst

◆ Heat shield for selector cables => Page 34-1

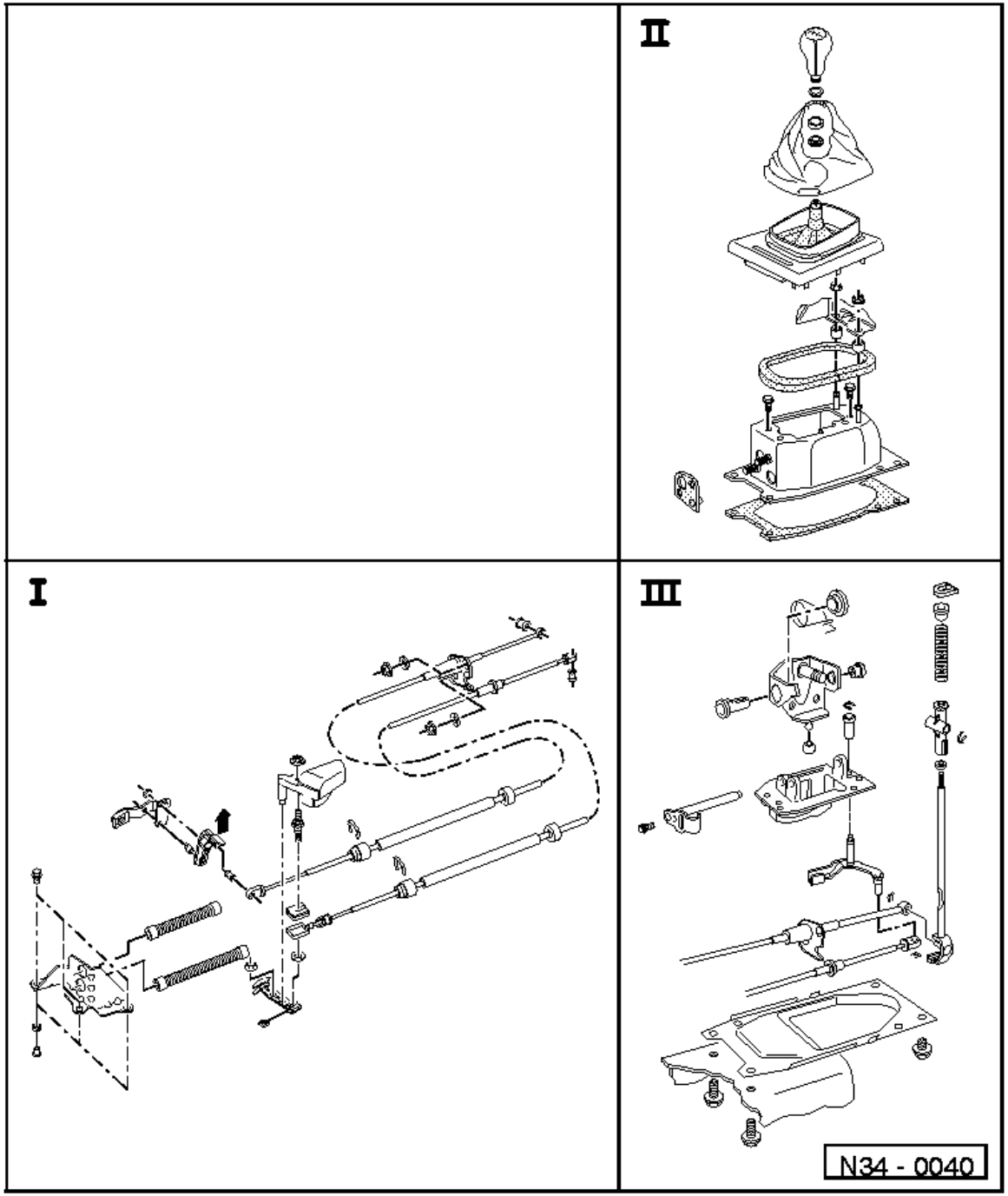

◆ Before working on the selector change mechanism, disconnect earth strap from the battery in the engine compartment.

◆ Note radio code on vehicles with coded radio.

◆ To replace the selector cables remove gear selector mechanism complete.

◆ Do not kink selector cables.

◆ Lubricate all mountings and contact surfaces with MoS2 grease.

◆ Adjusting selector cables
=> Page 34-19