Adjusting differential

The differential must be adjusted, when

◆ Gearbox housing

◆ Clutch housing

◆ Differential housing

or the

◆ Differential taper roller bearing

have been renewed.

Adjustment overview => Page 39-22.

- Pressing taper roller bearing outer race without shim into the clutch housing using thrust piece 30-205 => Page 39-14.

Note:

Inner and outer taper roller bearing races are a pair. Do not interchange.

- Pressing taper roller bearing outer race without shim into the gearbox housing using thrust piece 30-205 => Page 39-16.

- Fit differential into clutch housing

- Fit gearbox housing and tighten 5 bolts to torque setting.

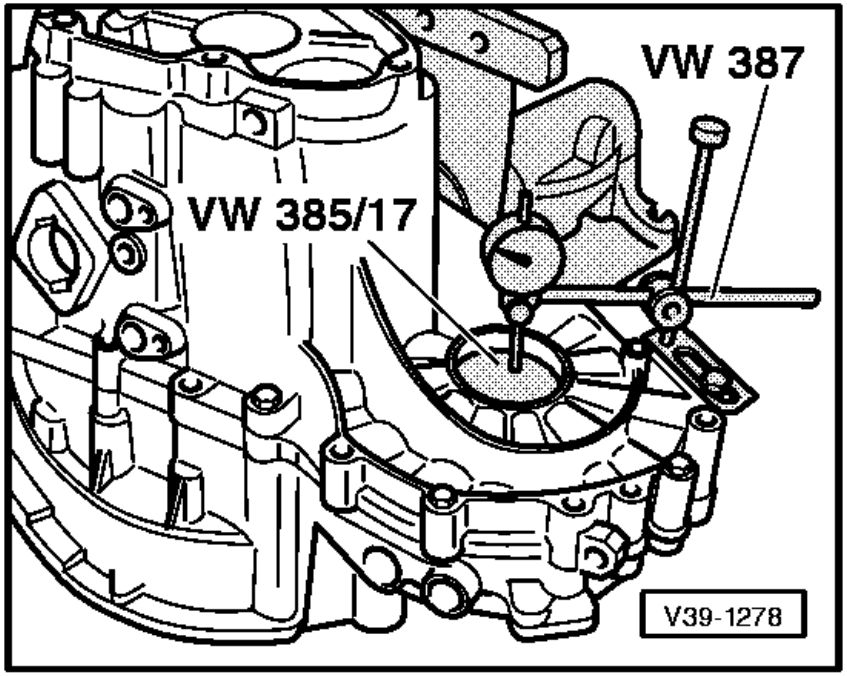

⇦ - Mount D.T.I. and "0" with 1 mm preload.

- Move differential up and down and recall play indicated on D.T.I.
  (Example: 0.70 mm)

Note:

Do not turn differential when measuring otherwise the bearing will settle and a false measurement will be given.

Determining shim thickness

The specified bearing preload is obtained by adding a constant figure (0.40 mm) to the reading obtained.

Example:

Reading	0.70 mm
+ Preload (constant figure)	0.40 mm
Thickness of shim =	1.10 mm

- Remove gearbox housing and pull out taper roller bearing outer race out of gearbox housing => Page 39-16or press out with thrust piece VW 473.

- Insert shims of correct thickness, thickest shim first.

The following shims are available:

Size (mm)	Part No.
0.65	02A 409 210
0.70	02A 409 210 A
0.75	02A 409 210 B
0.80	02A 409 210 C
0.85	02A 409 210 D
0.90	02A 409 210 E
0.95	02A 409 210 F
1.05	02A 409 210 G
1.05	02A 409 210 H
1.10	02A 409 210 J
1.15	02A 409 210 K
1.20	02A 409 210 L
1.25	02A 409 210 M

If the size of shim required is larger than those listed in the table, insert two shims totalling the correct figure.

Varying tolerances make it possible by measuring the shims to obtain the exact shim thickness required.

- Press outer race in again and tighten gearbox housing to torque setting.

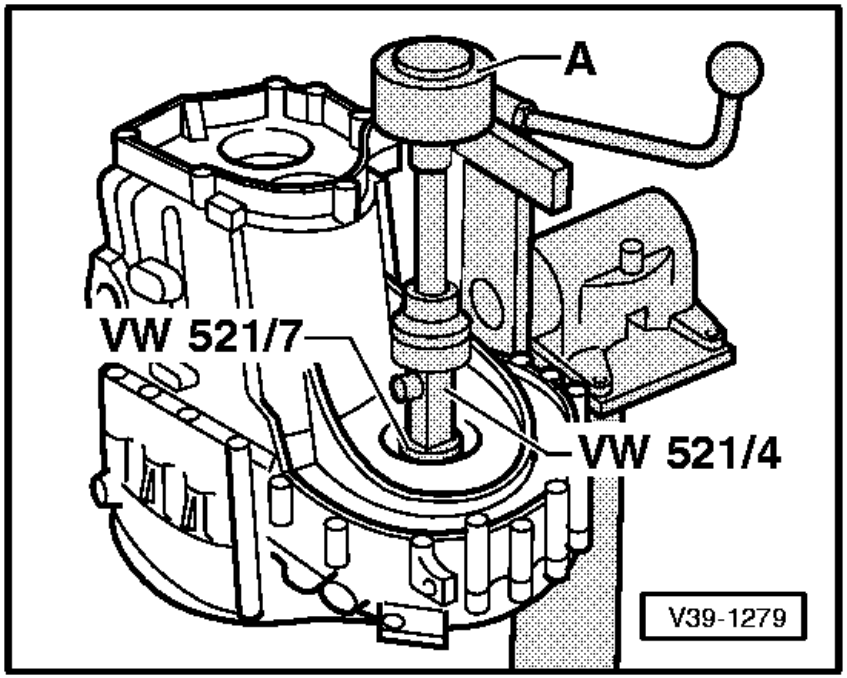

⇦ **Checking friction moment**

A - Commercial torque gauge 0 ... 600 Ncm

- Lubricate taper roller bearing with gear oil.

Friction moment:

◆ New taper roller bearings 120 ... 320 Ncm

◆ Used taper roller bearings at least 30 Ncm.