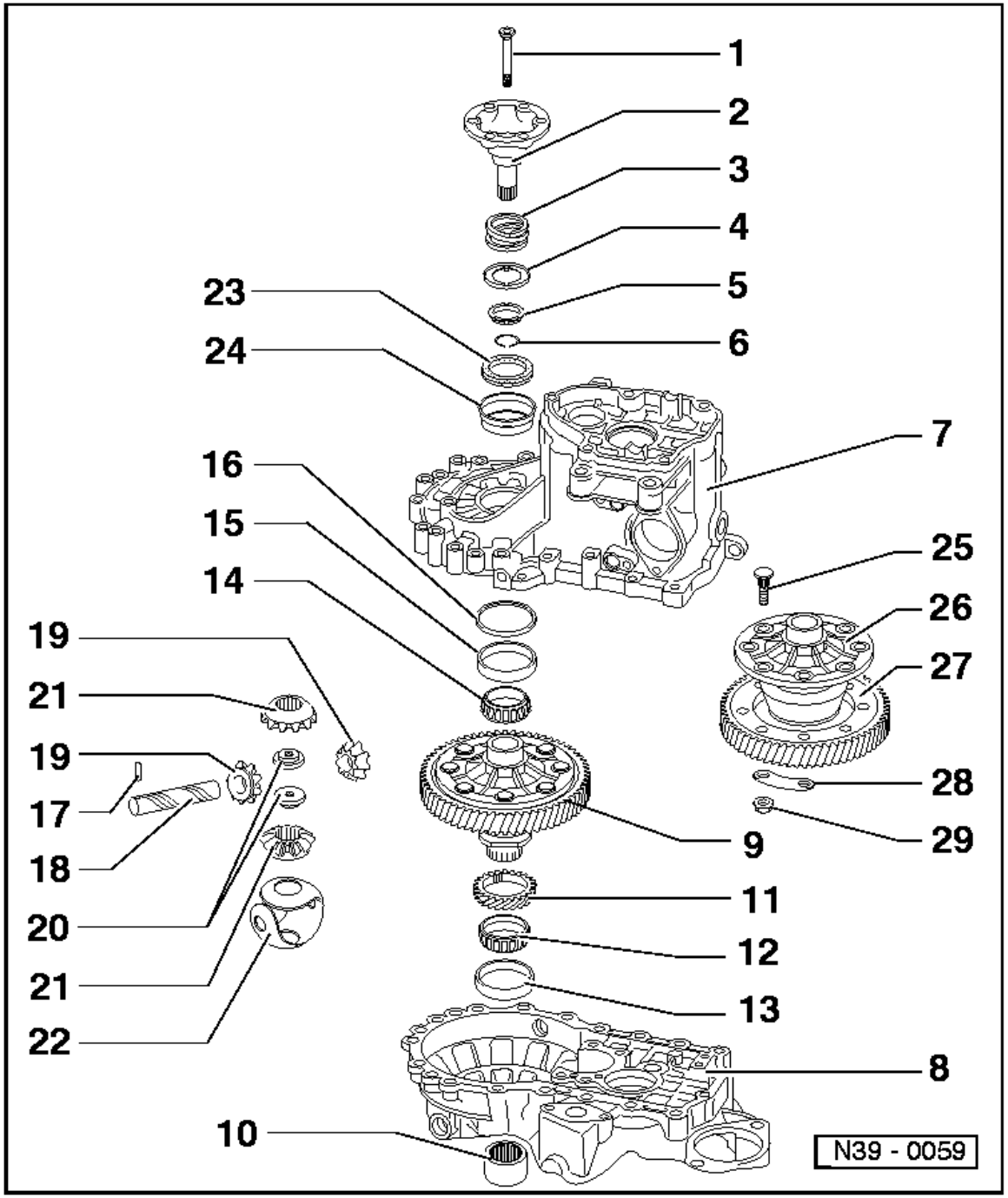

Notes:

◆ Heat taper roller bearing inner race to 100 °C before installing.

◆ Always renew both taper roller bearings together as a set.

◆ Adjust differential if the taper roller bearing, the differential housing, the gearbox housing and the clutch housing have been renewed=> Page 39-23.

1 - Counter sink bolt, 25 Nm
◆ Bolt into threaded piece (item20)

2 - Flange shaft
◆ Removing and installing
=> from Page 39-1

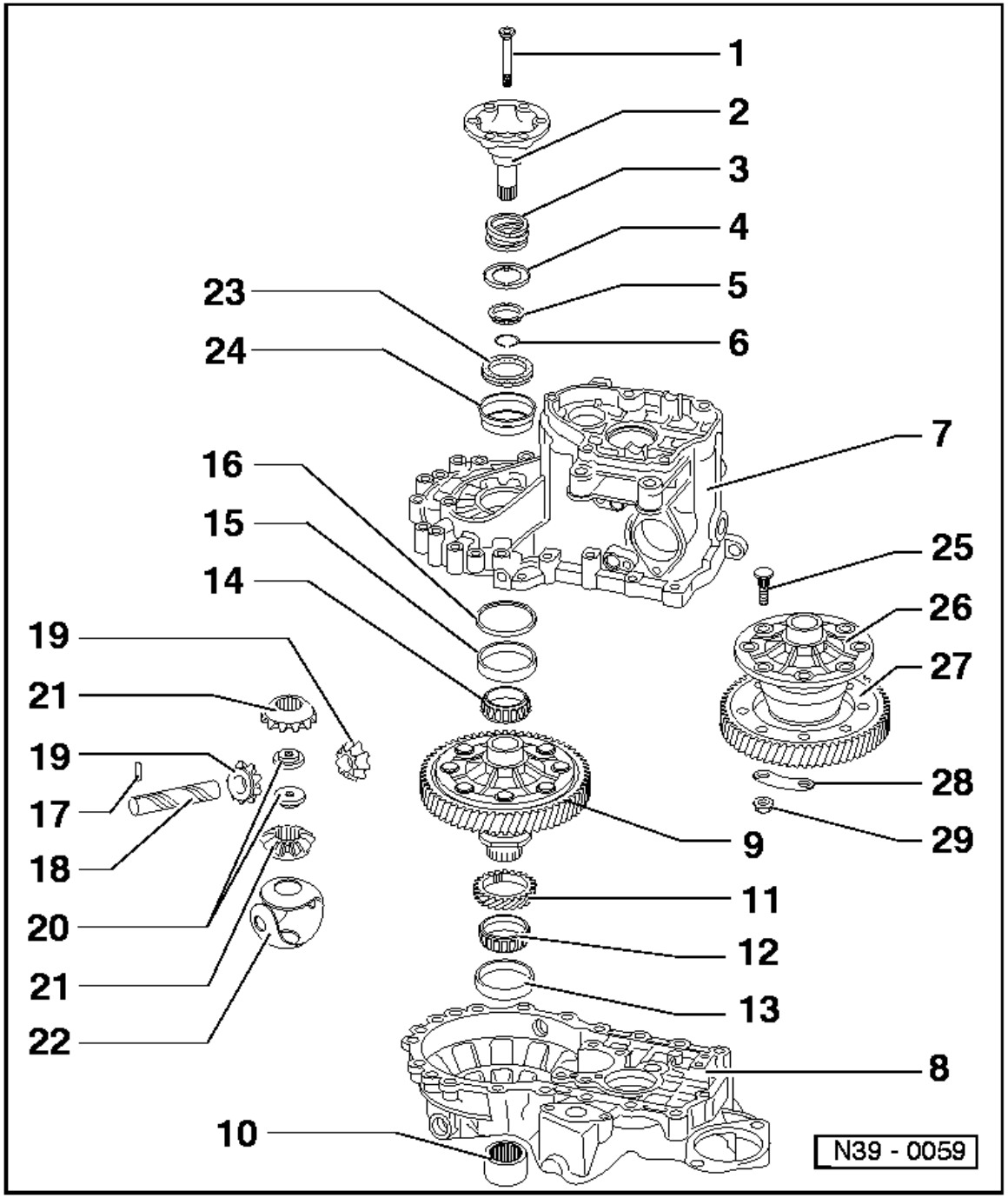

3 - Spring for flange shaft
- ◆ Length 19 mm
- ◆ Do not interchange with bevel box spring

4 - Thrust washer
- ◆ Installation position:
  Shoulder towards spring, tongue to tapered ring

5 - Tapered ring
- ◆ With grooves to secure thrust washer
- ◆ Installation position: Taper towards differential housing

6 - Circlip
- ◆ Ensures taper ring, thrust washer and spring are held in position when flange shaft is removed

7 - Gearbox housing

8 - Clutch housing

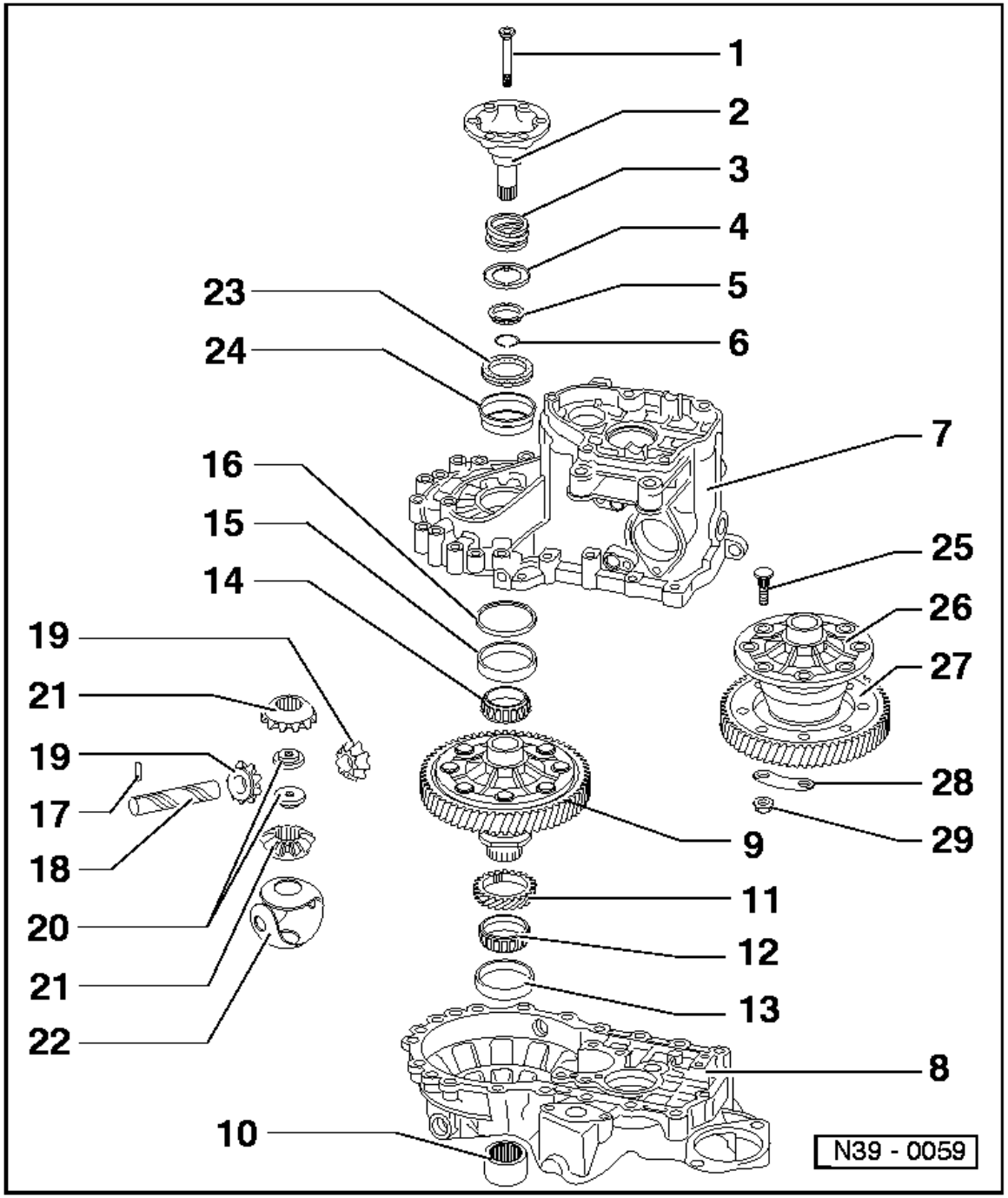

9 - Differential housing

- ◆ With rivetted final drive gear
- ◆ When renewing final drive gear drill out rivet heads => Fig.7
- ◆ Attaching final drive gear with bolts => Fig.7

10 - Bevel box connecting piece

- ◆ Pressed onto differential housing
- ◆ Only press on and off when differential housing has been removed
- ◆ Pulling off => Fig.13
- ◆ Pressing on => Fig.14

11 - Speedometer drive wheel

- ◆ Fit on differential housing before pressing on inner race

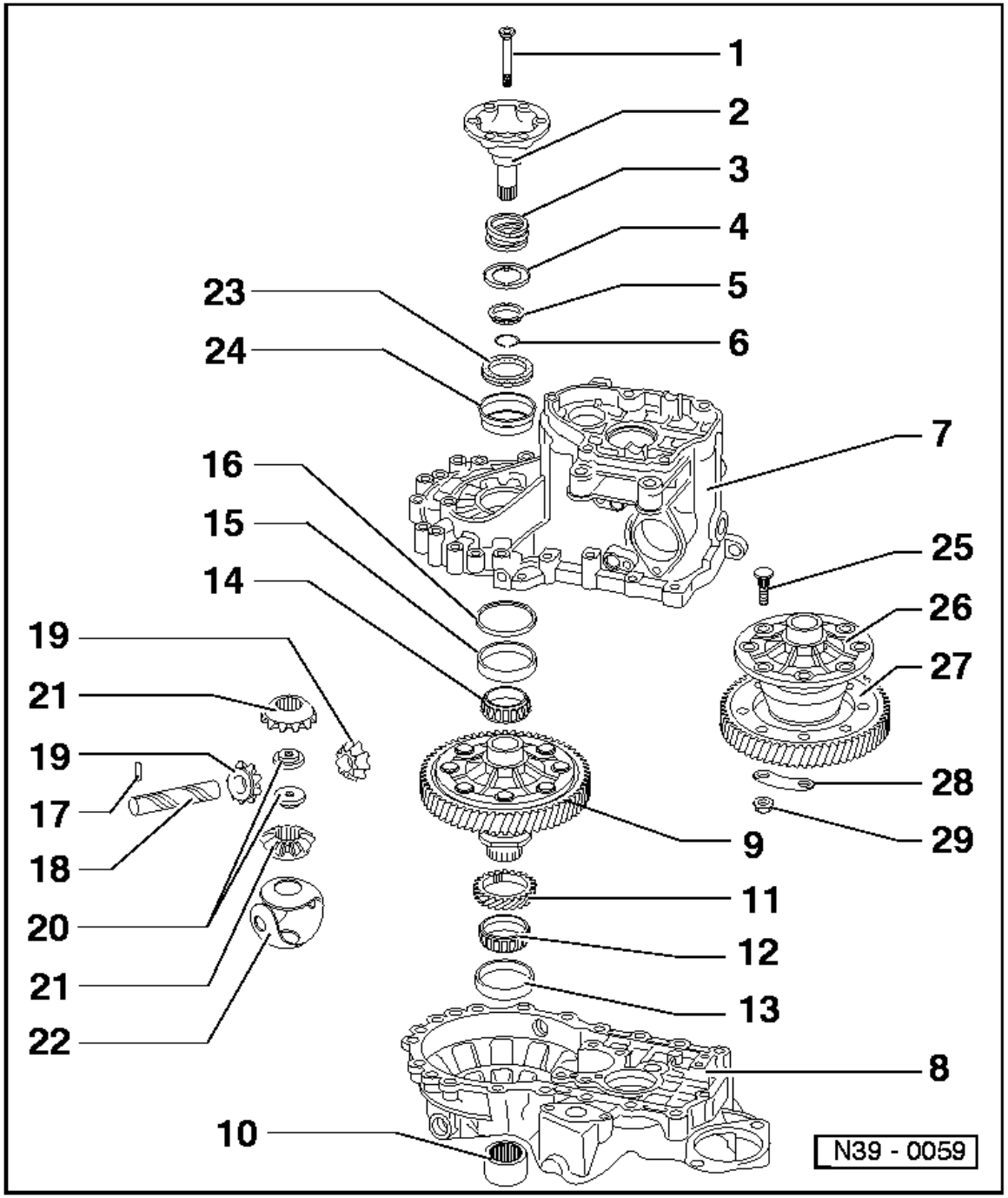

12 - Taper roller bearing inner race
- ◆ Before removing pull connecting piece off (item 10)
- ◆ Pulling off => Fig.3
- ◆ Pressing on => Fig.4

13 - Taper roller bearing outer race
- ◆ Pressing out => Fig.1
- ◆ Pressing in => Fig.2

14 - Taper roller bearing inner race
- ◆ Pulling off => Fig.3
- ◆ Pressing on => Fig.4

15 - Taper roller bearing outer race
- ◆ Pulling out => Fig.5
- ◆ Pressing in => Fig.6

16 - Shim
- ◆ For differential
- ◆ Determining thickness => Page 39-23

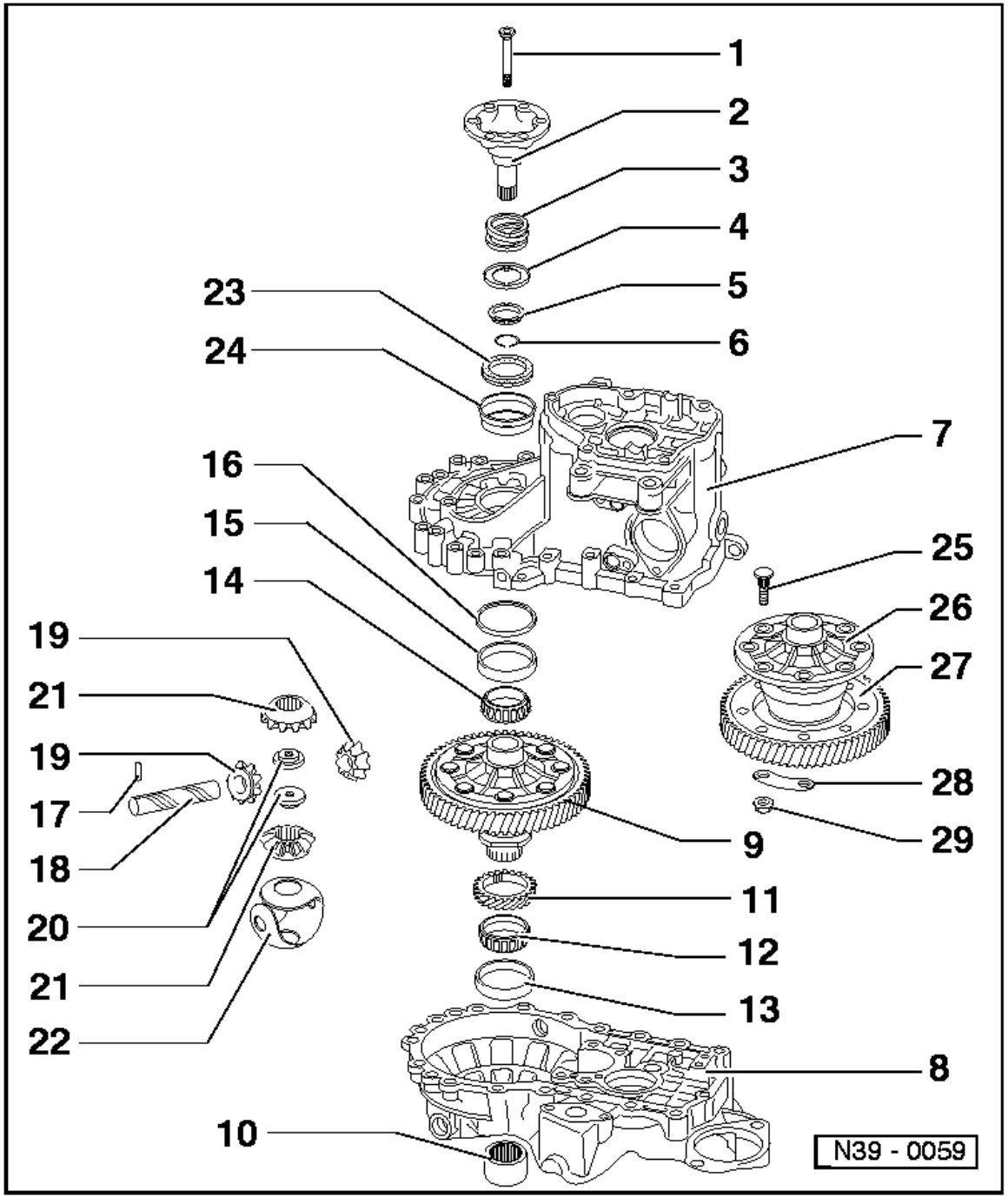

17 - Spring pin
- ◆ For securing planet pinion axis shaft
- ◆ Removing and installing
  => Fig.11

18 - Planet pinion axis shaft
- ◆ Knock out with drift

19 - Planet pinion
- ◆ Installing => Fig. 12

20 - Threaded piece

21 - Sun wheel
- ◆ Installing => Fig. 12

22 - One-piece thrust washer
- ◆ Coat with gearbox oil when installing

23 - Oil seal
- ◆ Renewing => Page 39-1

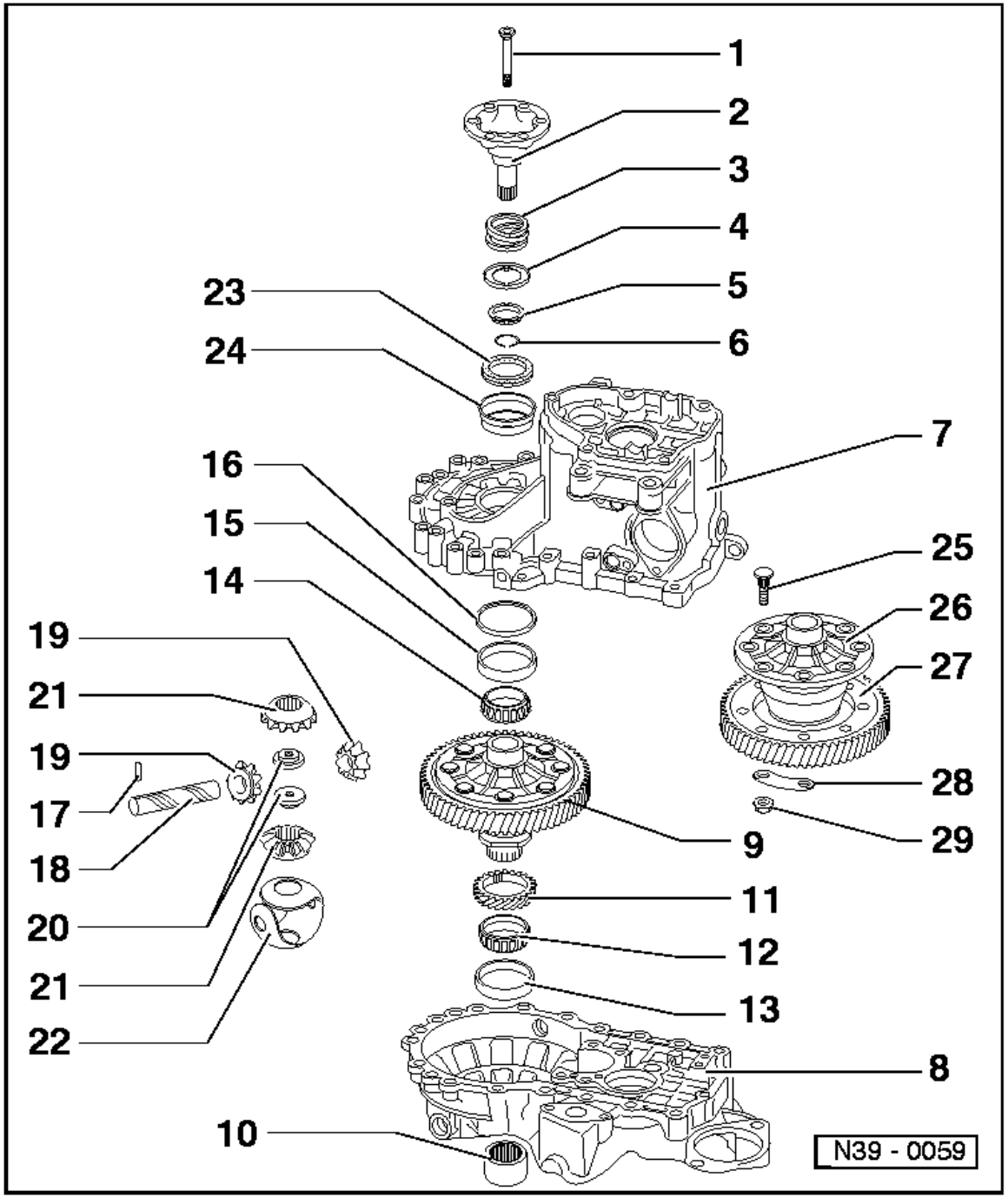

24 - Sleeve
- ◆ To accept oil seal (item 23)
- ◆ Removing and installing
  => Page 34-117

25 - Bolt

26 - Differential cage
- ◆ Bolt to final drive gear wheel => Fig.10

27 - Final drive gear wheel
- ◆ Rivetted in production
- ◆ Bolted => Fig.10
- ◆ Heat to 100 °C before installing
- ◆ Pressing off => Fig.8
- ◆ Fit to differential housing
  => Fig.9
- ◆ Is paired with output shaft, only renew as a set

28 - Packing plate

29 - Nut, 70 Nm

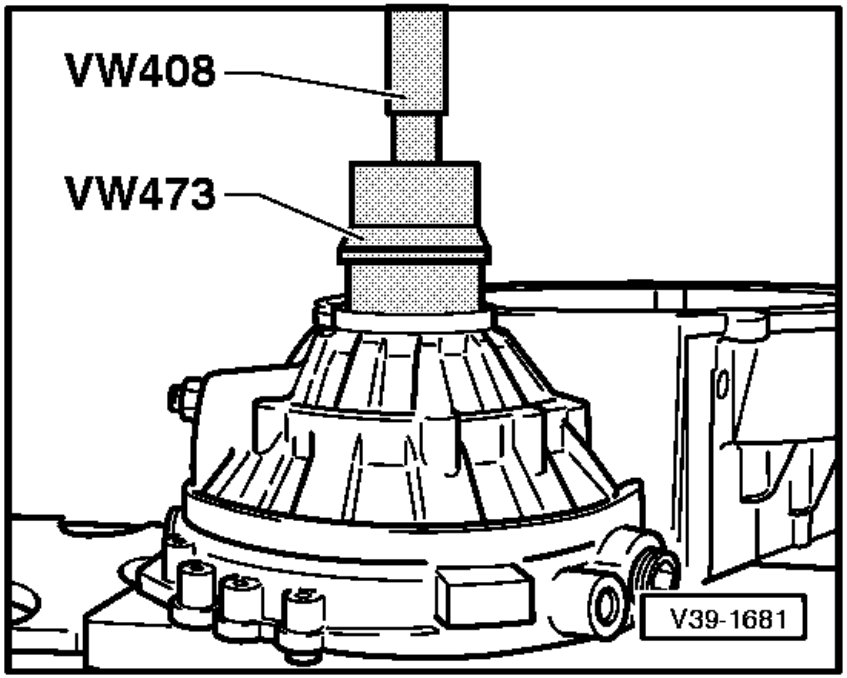

⇦ **Fig.1Pressing taper roller bearing outer race out of clutch housing** -

- First remove flange shaft seal mounting sleeve.

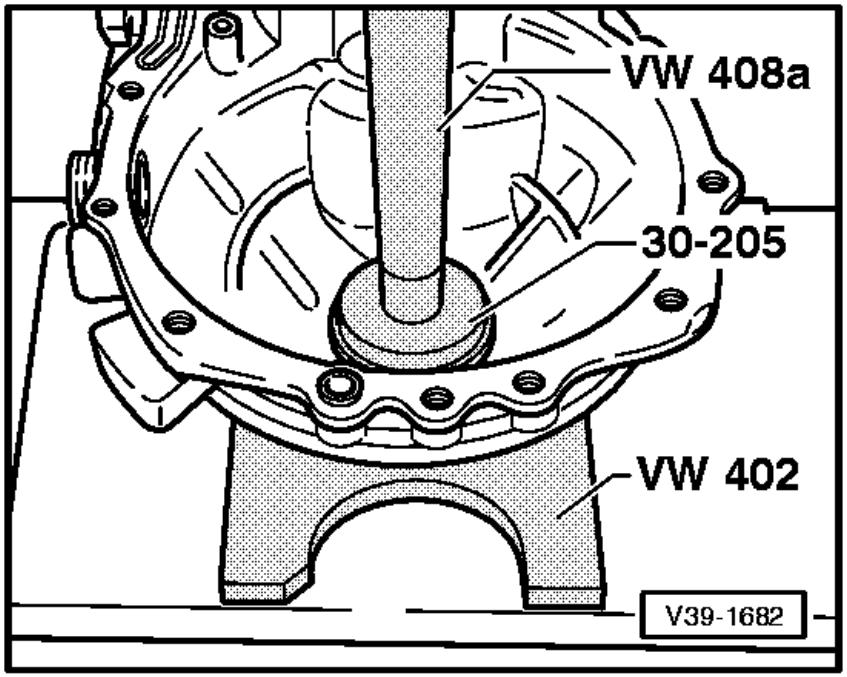

⇦ **Fig.2Pressing taper roller bearing outer race into clutch housing**

No shim is installed in the clutch housing end.

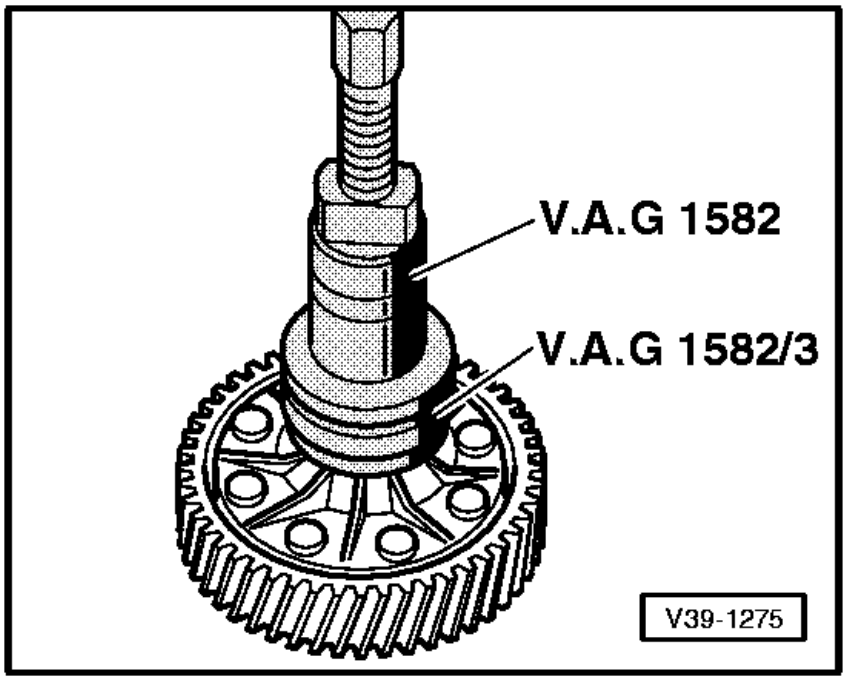

⇦ **Fig.3Pulling off taper roller bearing inner race**--

- Before fitting the extractor position press piece 40-105 on differential housing.

Notes:

◆ Both both taper roller bearing inner races are pulled off the differential housing in the same way.

◆ Before pulling taper roller bearing inner race off speedometer drive wheel pull connecting piece off => Fig.13.

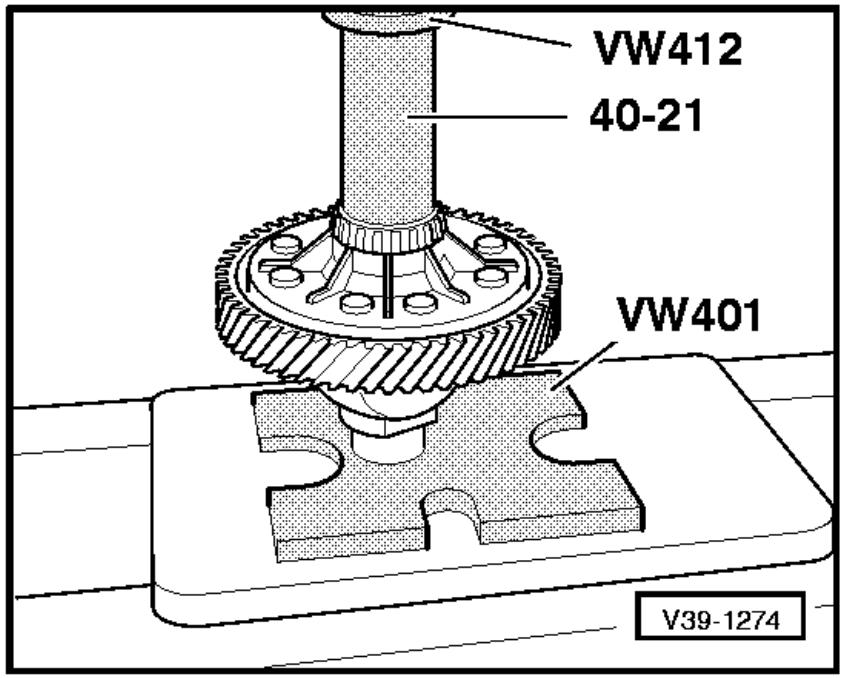

⇦ **Fig.4Pressing on taper roller bearing inner race**

Note:

The taper roller bearing inner races for gearbox housing side and clutch housing side are pressed on with the same press tools.

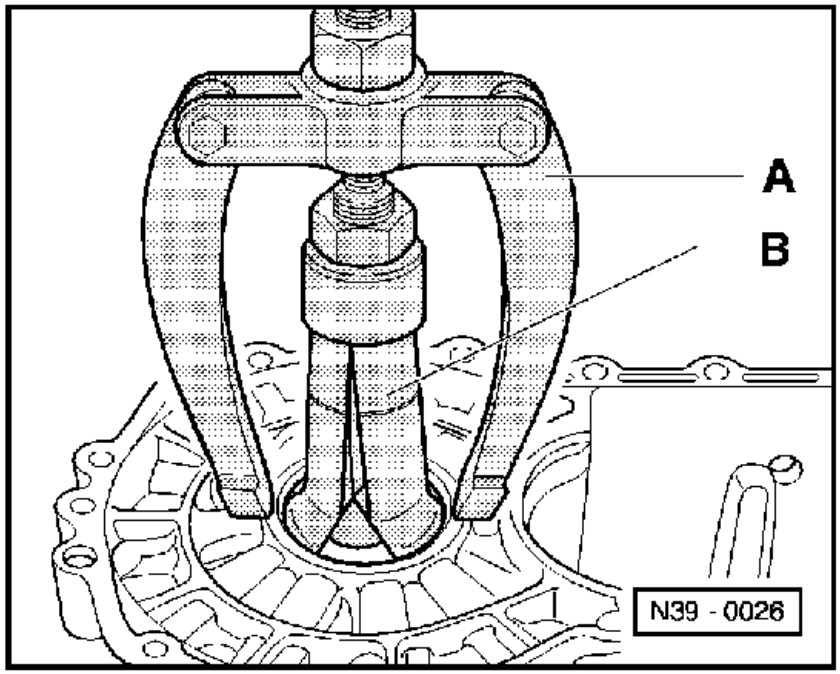

⇦ **Fig.5Pulling taper roller bearing outer race out of gearbox housing** -

A - Counter support, e.g. Kukko 22/2

B - Internal puller 46...58 mm, e.g. Kukko 21/7

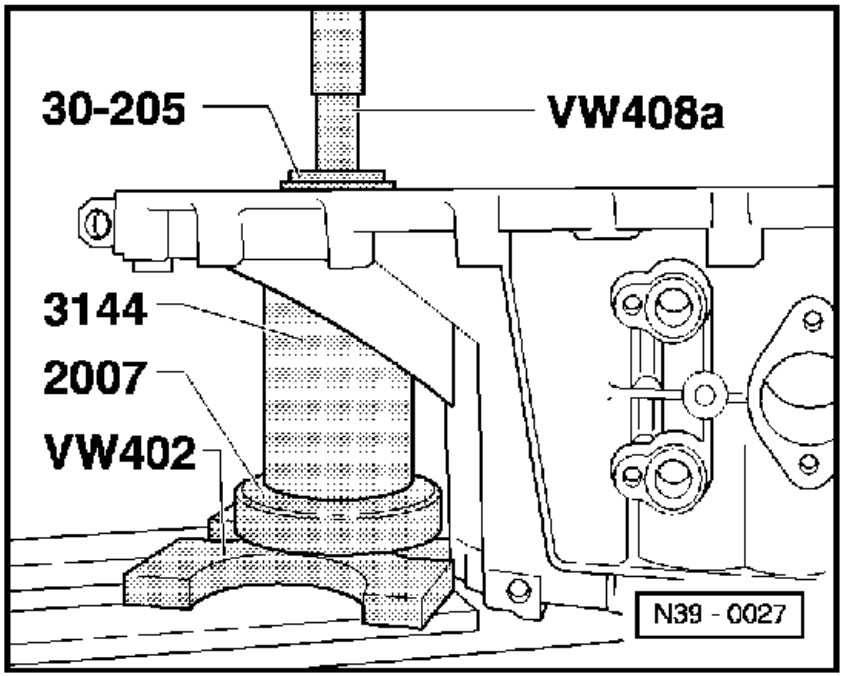

⇦ **Fig.6Pressing taper roller bearing outer race into gearbox housing**

- Fit shim under outer race.

- Support gearbox housing with sleeve 3144 directly below bearing mounting.

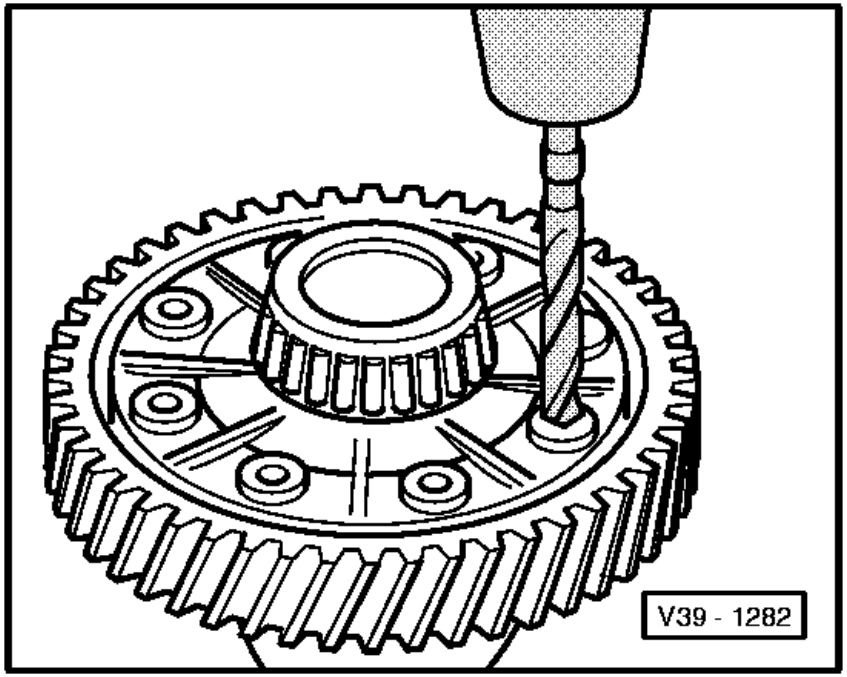

⇦ **Fig.7Drilling out rivet heads**

- Drill out rivet heads with 12 mm drill from countersunk side and drive rivet out with drift.

Note:

Clean differential before and after drilling, protect taper roller bearing from drillings.

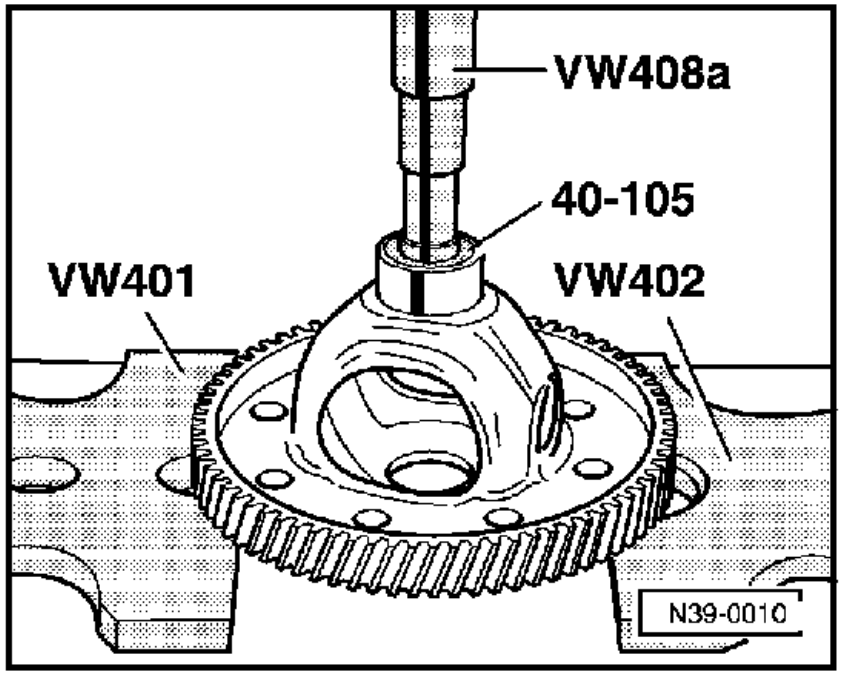

⇦ **Fig.8Pressing off final drive gear**

- Place thrust piece 40-105 on differential housing.

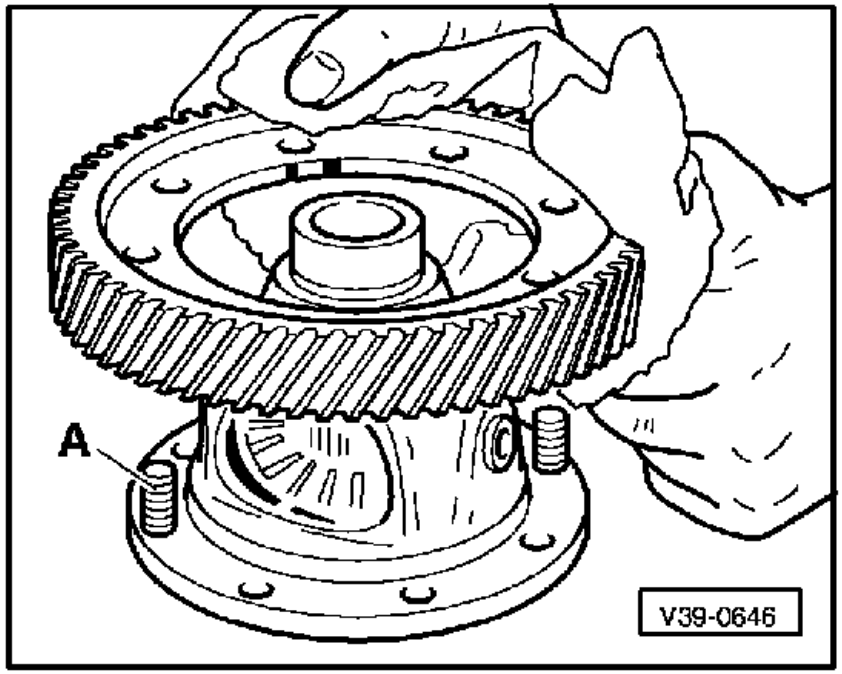

⇦ **Fig.9Heating final drive gear wheel to approx. 100 °C and installing**1 -

- Use bolts -A- from repair kit to guide final drive gear into position during installation.

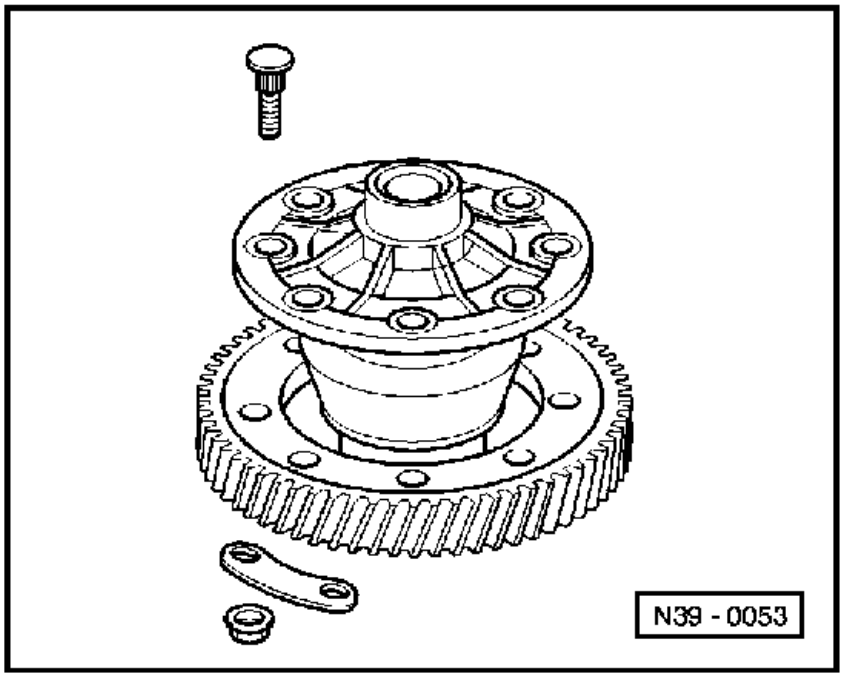

⇦ **Fig.10 Bolting final drive gear and differential housing together**

Use special bolts Part No. 02A 498 088 A with plates and nuts.

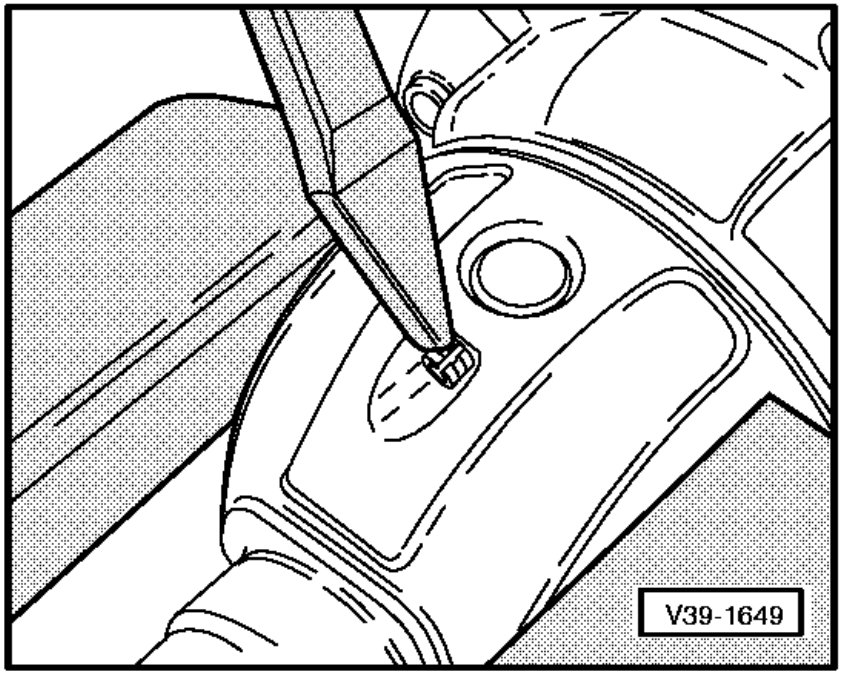

⇦ **Fig.11Removing and installing planet wheel axis shaft spring pin** 12 -

Removing

- Cover taper roller bearing inner race and speedometer drive gear to avoid possible damage and ingress of metal particles.

- Knock-out spring pin with chisel, inserting chisel into circumferential groove.

Installing

- Knock fully into the differential housing.

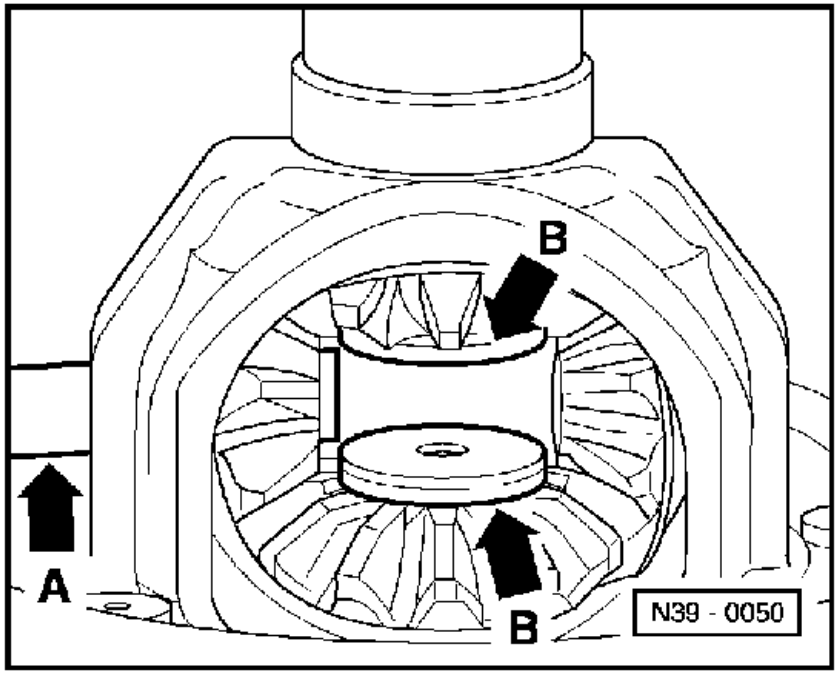

⇦ **Fig.12Installing differential bevel wheels**

- Lubricate one piece thrust washer with gearbox oil and install.

- Install both sun wheels and secure (e.g. with flange shaft).

- Insert planet wheels turned through 180°and pivot into position.

- Push planet wheel axis shaft (arrow -A-) in until first planet wheel.

- Position threaded piece (arrow -B-) in sun wheels
  Installation position: step towards sun wheel

- Drive planet wheel axle into final position and secure with spring pin.

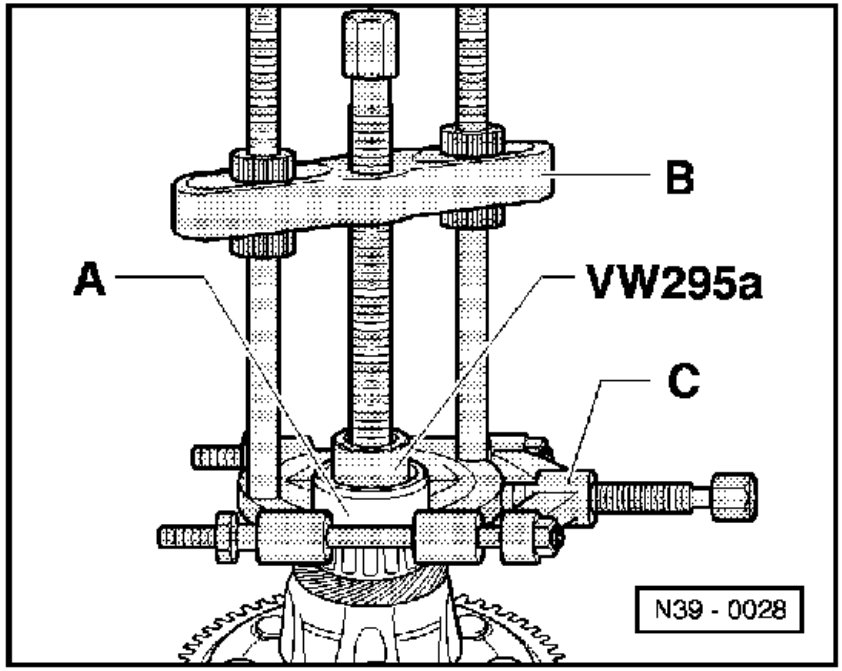

⇦ **Fig.13Pulling connecting piece off**

A - Connecting piece

B - Puller, e.g. Kukko 18/1

C - Separating tool 12...75 mm, e.g. Kukko 17/1

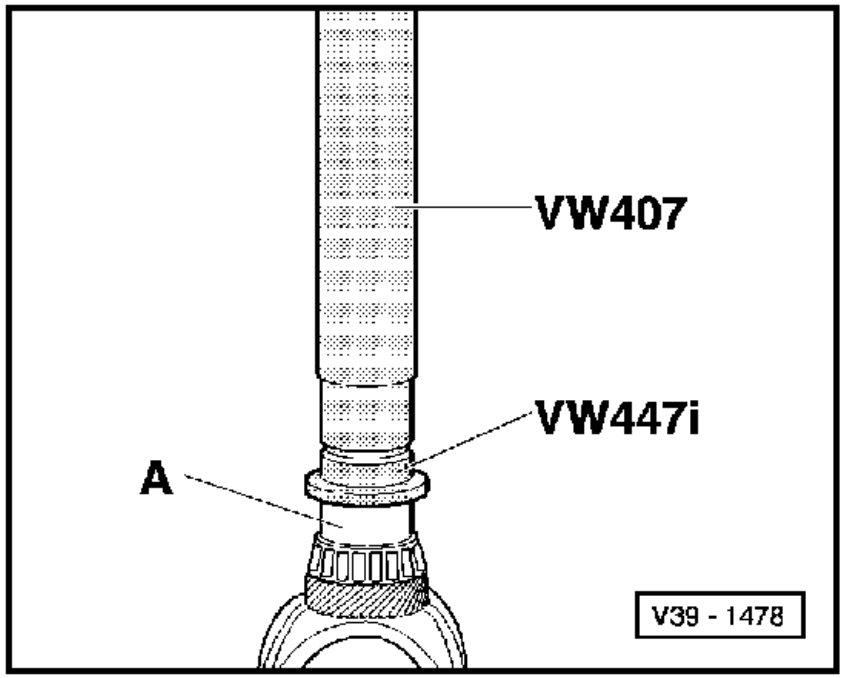

⇦ **Fig.14Pressing on connecting piece -A- for bevel box**