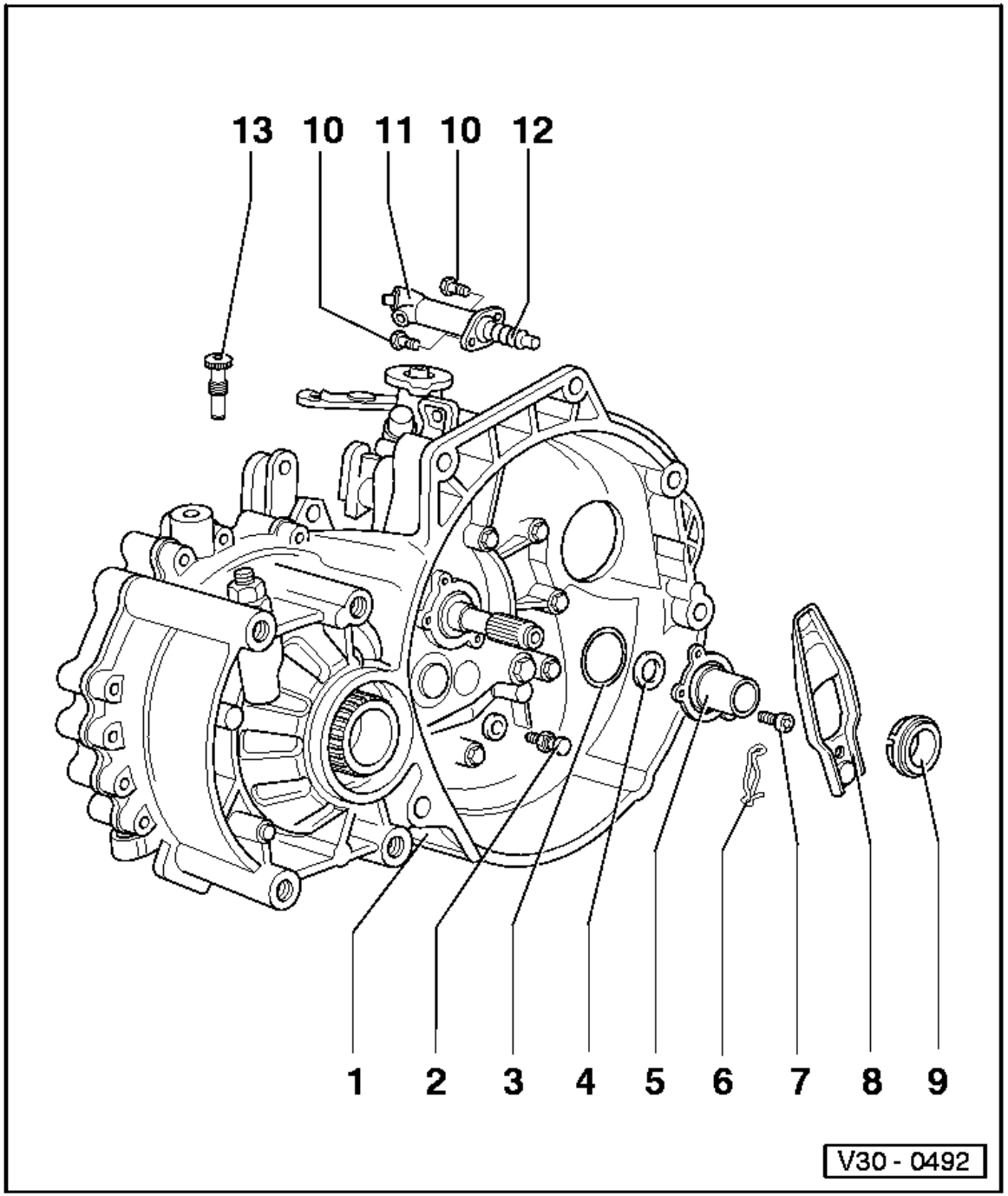

1 - Gearbox

2 - Ball stud, 25 Nm
- ◆ Lubricate with MoS2 grease

3 - O-ring
- ◆ Always renew

4 - Input shaft oil seal
- ◆ Renewing => Page 34-112

5 - Guide sleeve
- ◆ Lubricate in area of release bearing with MoS2 grease

6 - Retaining spring
- ◆ Secure to clutch release lever

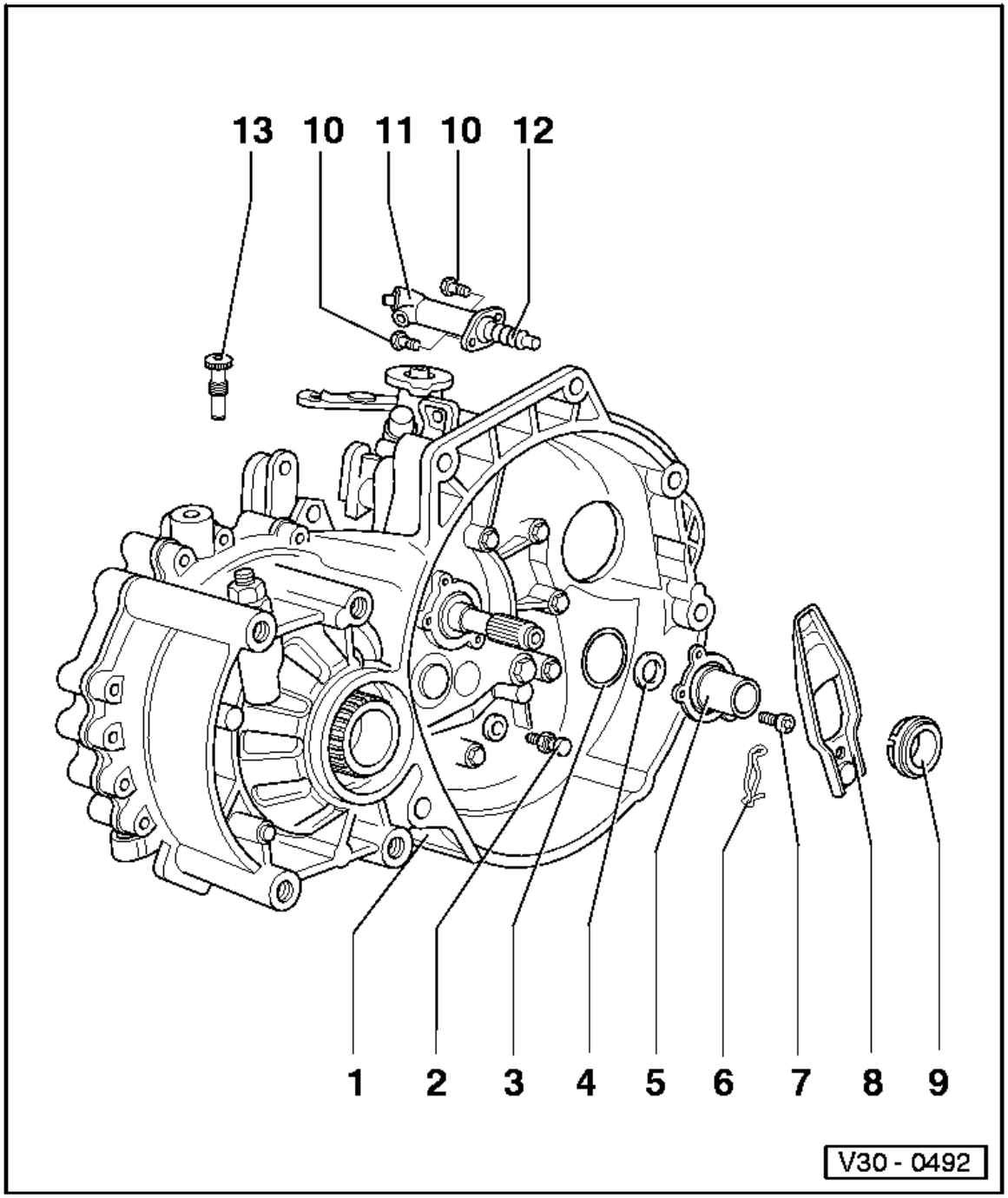

7 - Securing bolt, 20 Nm

8 - Clutch release lever

9 - Release bearing
- ◆ Do not wash-out bearing, only wipe
- ◆ Renew noisy bearings
- ◆ Lubricate surfaces which contact release lever with MoS2 grease

10 - Securing bolt, 20 Nm

11 - Slave cylinder
- ◆ Removing and installing
  => Page 30-10

12 - Plunger
- ◆ Grease end of plunger with MoS2 grease

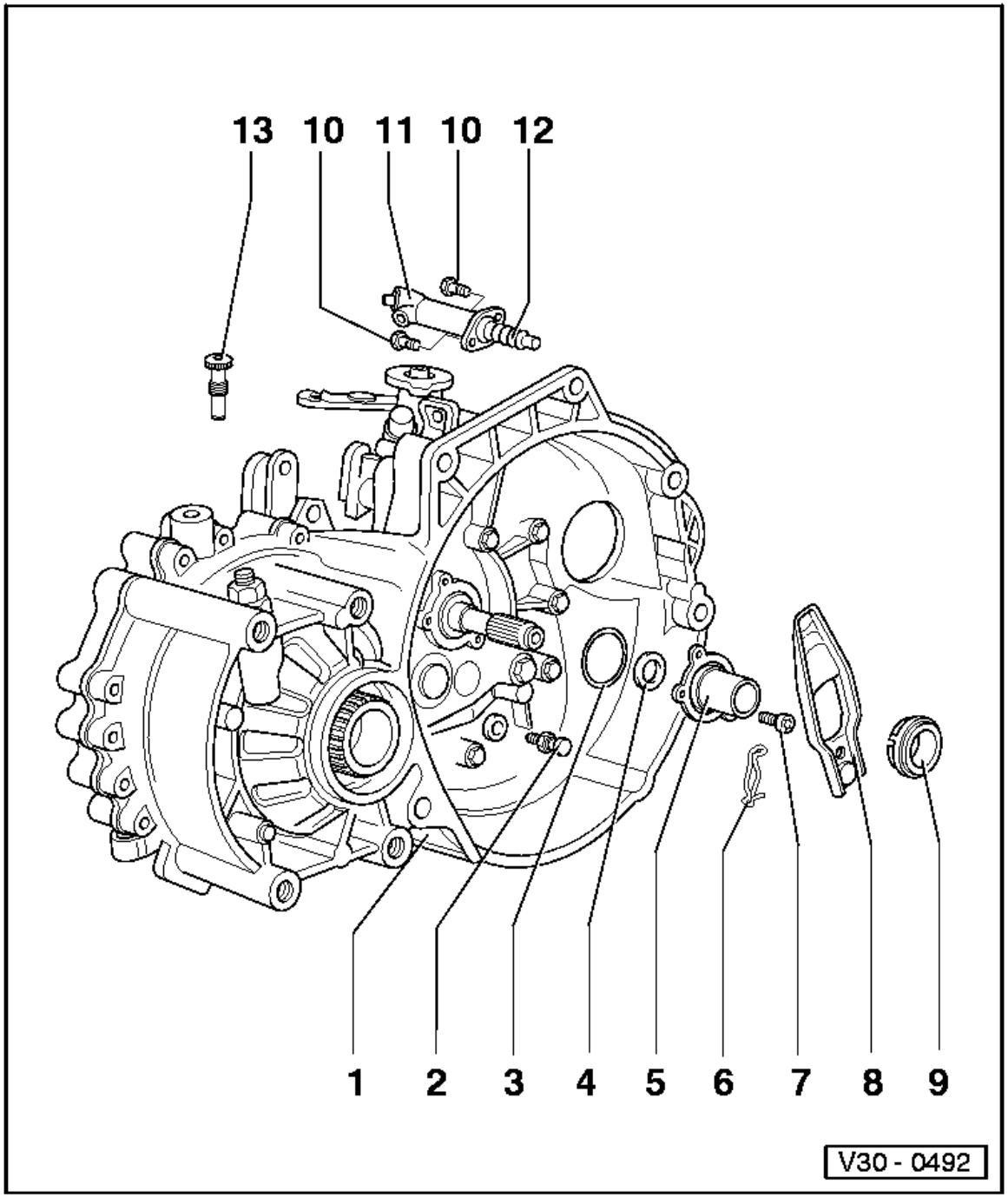

13 - Assembly bolt

- Secures the clutch release lever when installing gearbox =>Page 34-35and Page 34-54
- Unscrew after gearbox has been installed

Note:

*If the assembly bolt (Item*13) is not available, an M 8 x 35 bolt can be used.