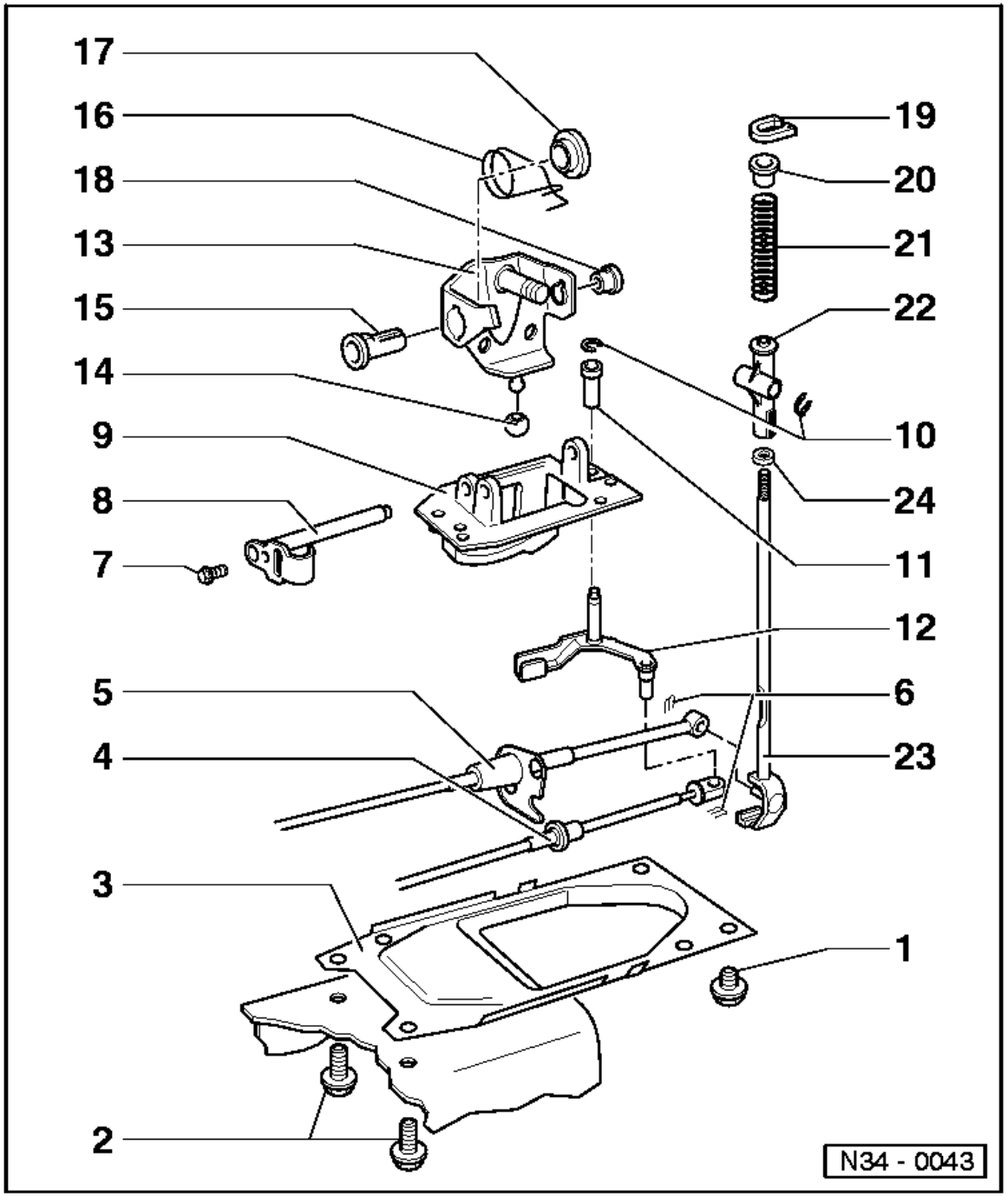

1 - Hexagon bolt, 25 Nm
◆ For gear stick housing to body

2 - Hexagon bolt, 25 Nm
◆ For gear stick housing to body

3 - Cover plate

4 - Gate selector cable
◆ On gate selector bracket

5 - Gear selector cable
◆ On gear lever

6 - Spring clip

7 - Hexagon bolt, 15 Nm
◆ For fulcrum pin to mounting plate

8 - Fulcrum pin

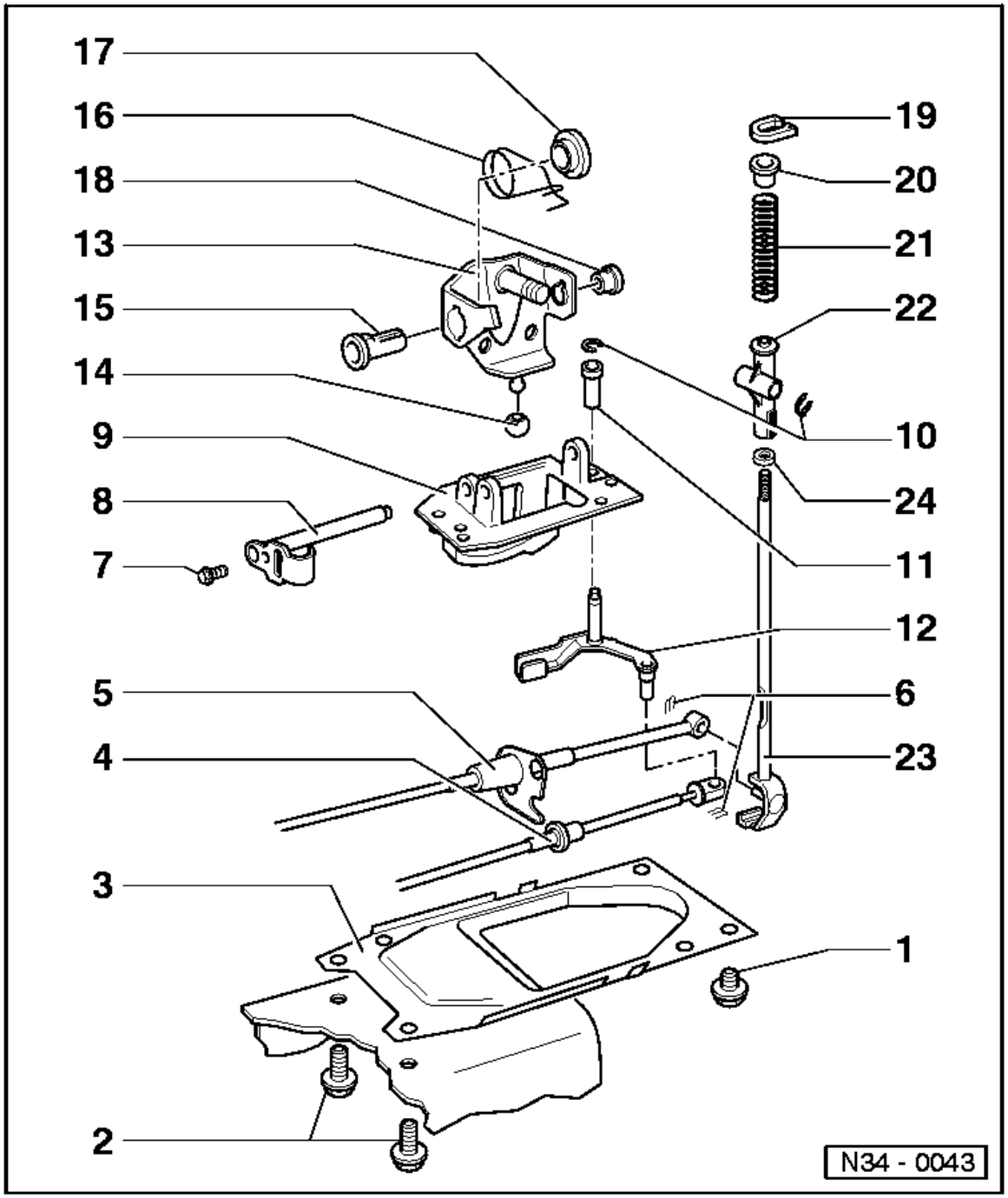

9 - Mounting plate

10 - Lock washer
◆ Removing => Fig.3

11 - Bush
◆ Only fits in one position

12 - Gate selector bracket

13 - Gate selector housing
◆ Fit into mounting plate after fitting the complete gear stick

14 - Cap
◆ Installing => Fig. 1

15 - Bush

16 - Spring

17 - Guide bush
◆ Locate on bush (item 15)

18 - Bush

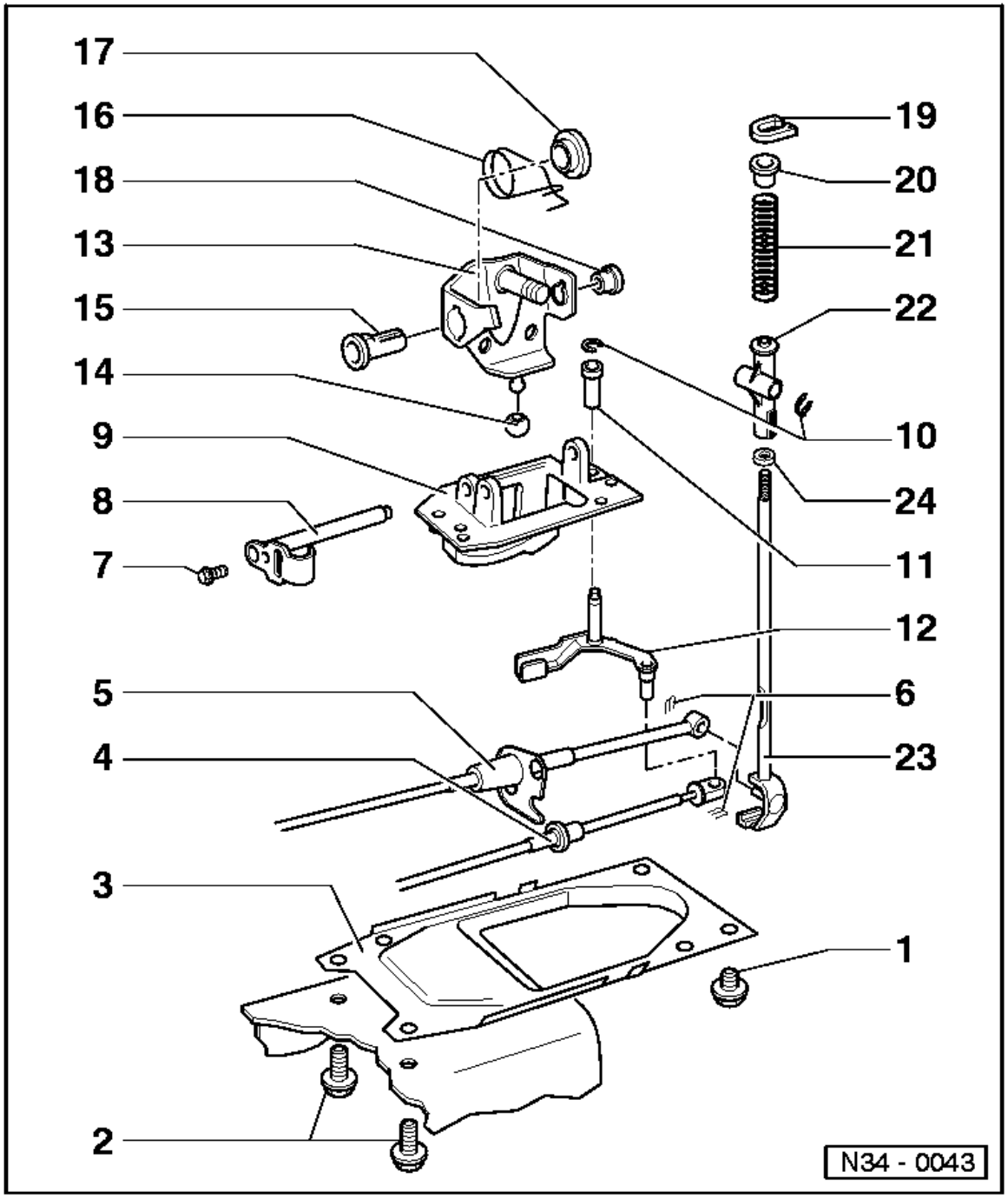

19 - Circlip

◆ Removing and installing =>Fig.2

20 - Spacer sleeve

21 - Spring

22 - Gear stick guide

23 - Gear stick

24 - Damping washer

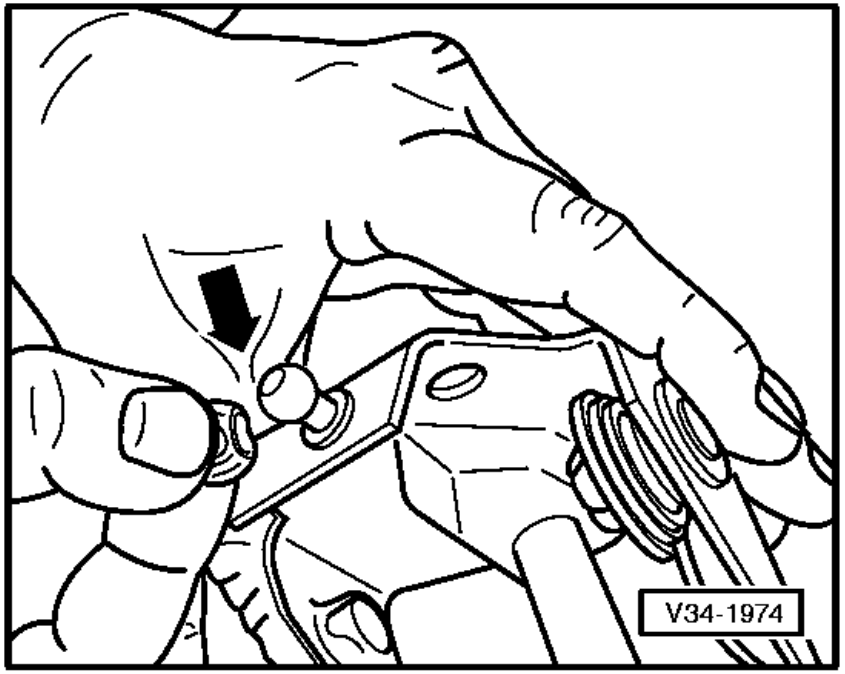

⇦ **Fig.1Installing cap**

- Press on from side (arrow).

- Press opening together to form a slot.

Note:

If necessary heat cap (e.g. hot water).

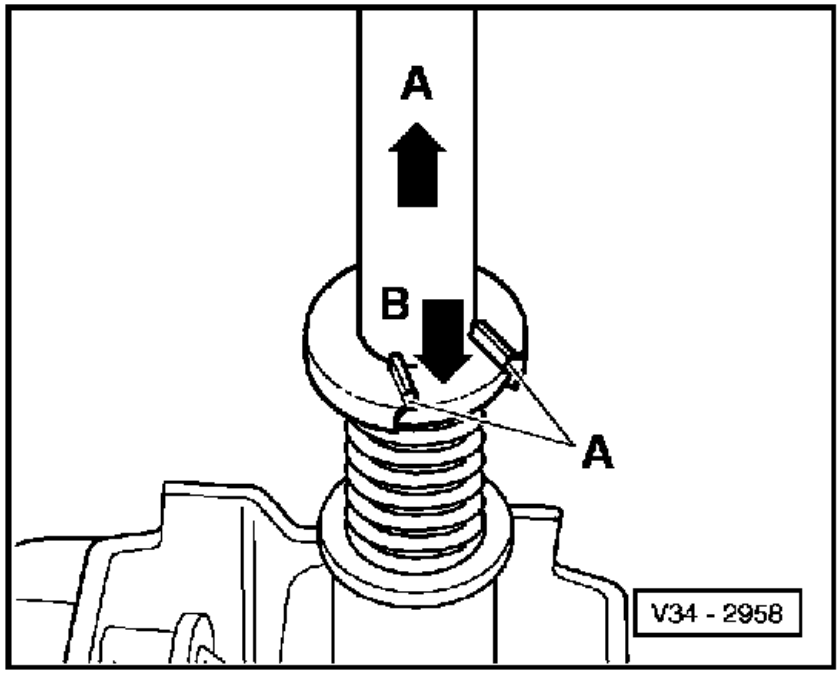

⇦ **Fig.2Removing and installing circlip**

- To remove and install the circlip pull gear stick in arrow direction -A- and at the same time push down spacer bush onto stop with a screwdriver in arrow direction -B-.

Note:

Do not tilt spacer bush when pushing down. Groove in gear stick for circlip must be easily accessible.

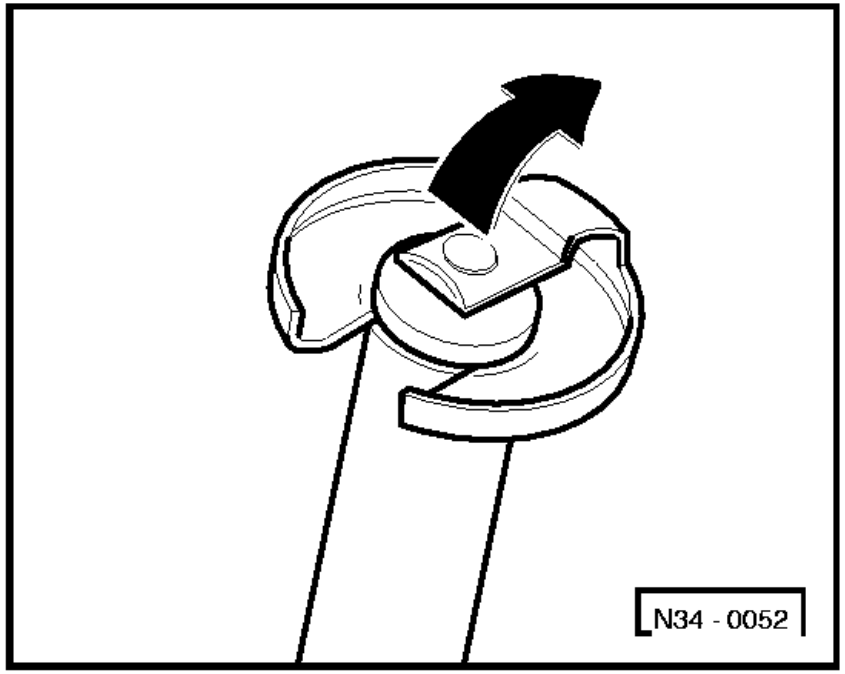

⇦ **Fig.3Removing lock plate for gate selector bracket and gear stick guide/gate selector housing**

- Lift tab in direction of arrow.