Removing and installing drive flange oil seal (rear final drive installed)

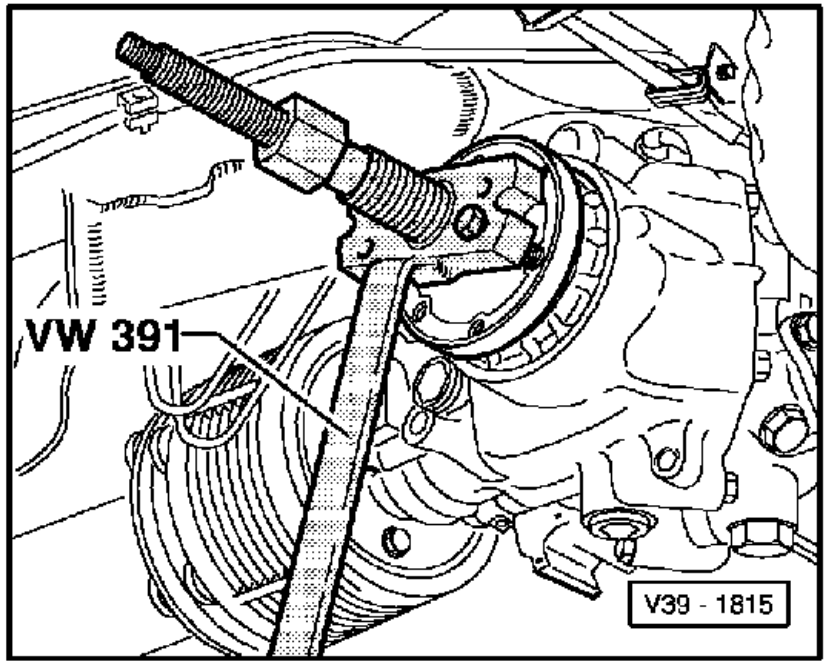

Removing

- Separate drive shaft from drive flange.

- Remove cap by piercing cap centre with a screwdriver and levering out.

- Remove circlip and dished washer.

- Place an drip tray under the gearbox.

⇦ - Pull drive flange off with VW 391.

Note:

To prevent damage, lightly grease spindle and seating surface of tool VW 391.

- Pull drive flange oil seal out with VW 681.

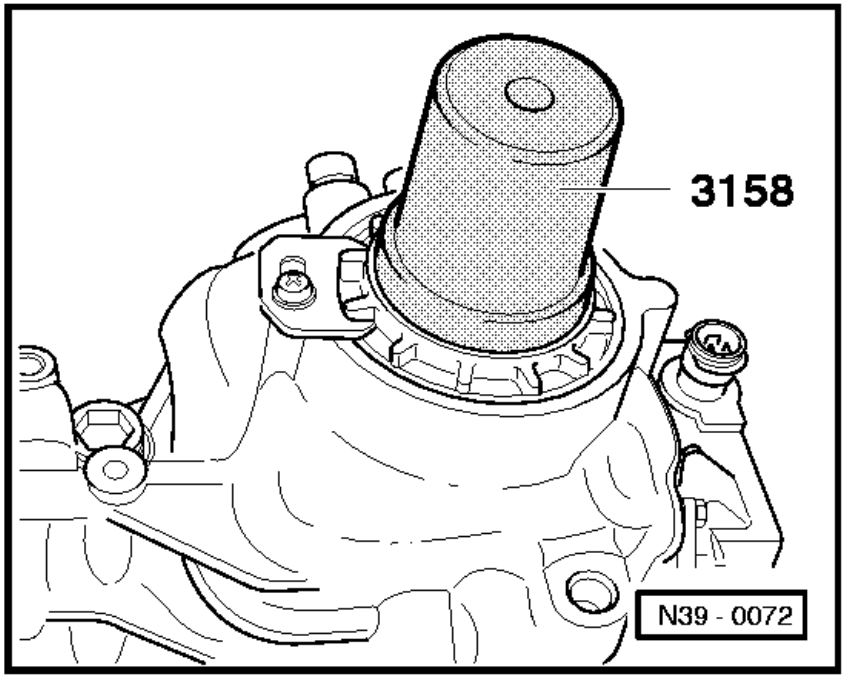

⇦ - Drive new seal in onto stop.

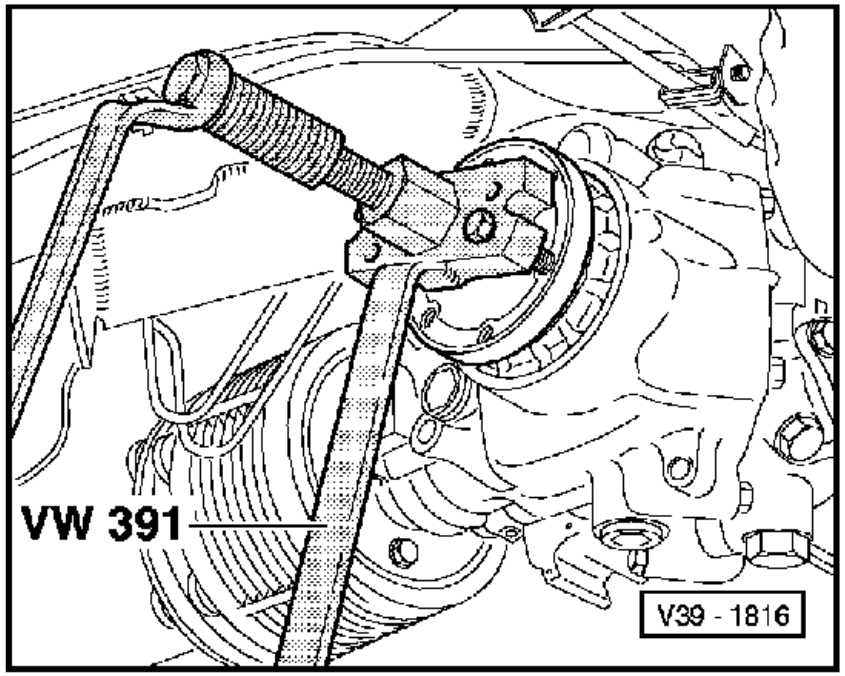

⇦ - Pull drive flange in.

- Counterhold assembly tool spindle with spanner.

Note:

The drive flange can be heated in the area of the splines to 90°C with hot air blower V.A.G 1416 or on a hot plate.

Higher temperatures can damage seals! Use thermometer V.A.G 1558 to measure temperature.

- Install dished washer and circlip.

- Press in a new cap.

- Reconnect drive shaft to drive flange.

- Checking rear final drive oil
  => Page 39-111.

Tightening torques

900048	Type	Type description	MY	Engine ID	Gearbox ID	User	Workshop Manual
	3A				CGM	---	-

Drive shaft to final drive	45 Nm
Oil filler plug to bevel gear housing	25 Nm