(Determining thickness of output shaft shim)

It is necessary to readjust the output shaft when

◆ Final drive

◆ Clutch housing

or

◆ Taper roller bearing

have been changed.

Adjustment overview => Page 39-22

- Press small taper roller bearing outer race together with a 0.65 mm thick shim fully into clutch housing=>Page 35-29.

- Insert output shaft and tighten bearing support to 25 Nm and then turn 90° further.

⇦ - Mount D.T.I. (3 mm measuring range) and "O" with 1 mm preload.

- Move output shaft up and down and note dial gauge reading (example: 0.30 mm).

Note:

Do not turn the output shaft whilst measuring, otherwise the bearing will settle and a false reading will be given.

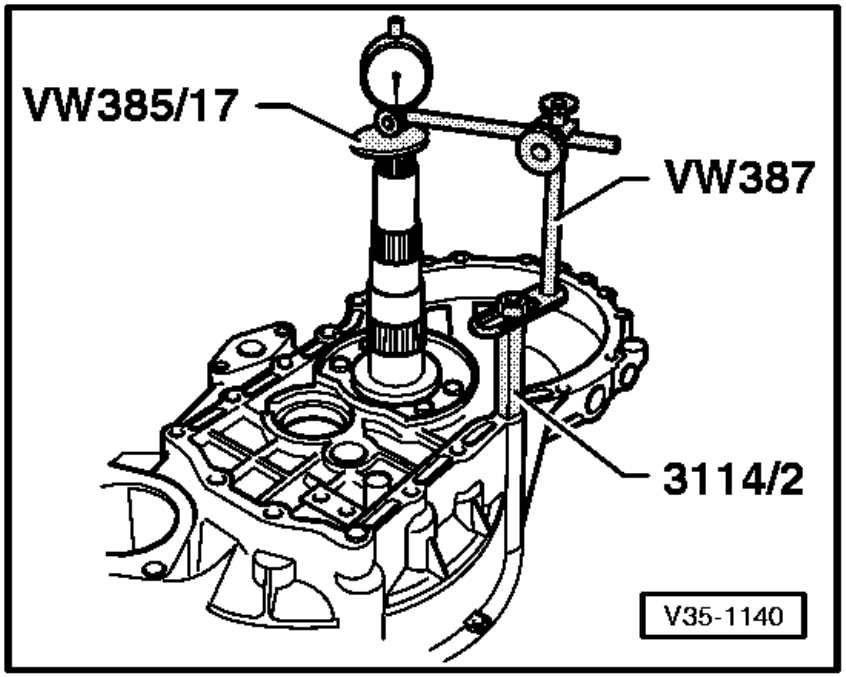

Determining thickness of shim

The specified bearing preload is obtained by adding
a constant preload figure of (0.20 mm)
to the reading obtained (0.30 mm)
and the thickness of the shim installed (0.65 mm).

Example:

Shim installed	2E	CGM	0.65 mm
+ Reading			0.30 mm
+ Preload (constant)			0.20 mm
Thickness of shim			1.15 mm

- Remove output shaft and pull out small taper roller bearing outer race => Page 35-29

The following adjustment shims are available:

Size (mm)	Part No.
0.65	020 311 391 P
0.70	020 311 391 Q
0.75	020 311 391
0.80	020 311 391 A
0.85	020 311 391 B
0.90	020 311 391 C
0.95	020 311 391 D
1.00	020 311 391 E
1.05	020 311 391 F
1.10	020 311 391 G
1.15	020 311 391 H
1.20	020 311 391 J
1.25	020 311 391 K
1.30	020 311 391 L
1.35	020 311 391 M
1.40	020 311 391 N

Varying tolerances make it possible by measuring the shims to obtain the exact shim thickness required.

- Press in small taper roller bearing outer race together with the correct shim (in example 1. 15 mm) (=>Page 35-29) and install output shaft. Tighten bearing support nuts in clutch housing to 25 Nm and then turn 90° further.

Checking friction moment

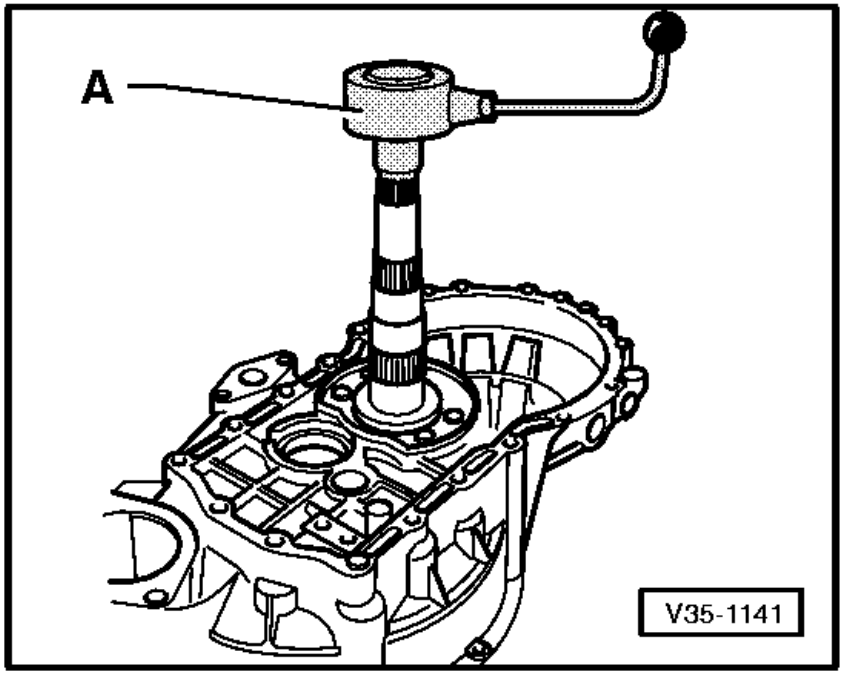

For new taper roller bearings the friction moment must be 130 ... 180 Ncm.

For used taper roller bearings the friction torque must be at least 30 Ncm.

Note:

Lubricate bearings with gearbox oil before checking friction moment.