This adjustment is only necessary if the output flange is replaced. Its purpose is to re-establish the shaft bevel gear taper roller bearing preloading.

Note:

Identifying differences between 4-Cyl. engine and 6-Cyl. injection engine output flanges => *Page* 39-49.

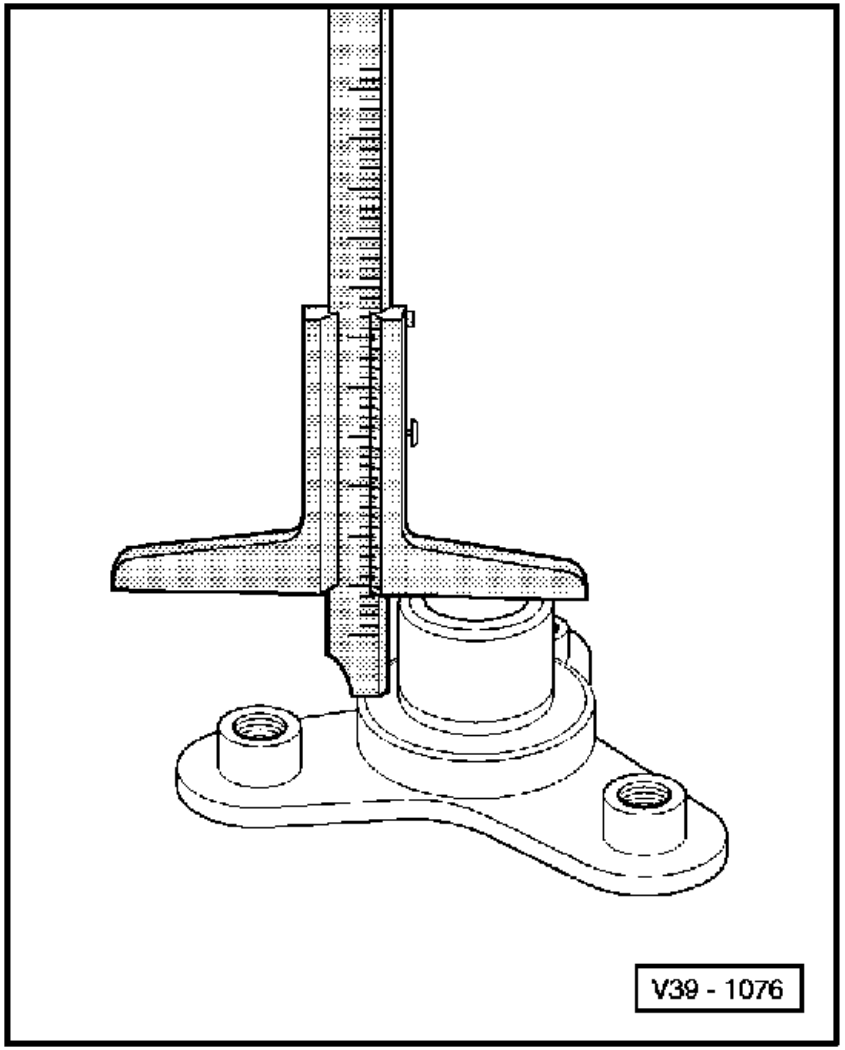

⇦ - Measure length of old and new output flange shafts and determine difference.

Example:

Old output flange	25.80 mm
New output flange	25.60 mm
Difference	0.20 mm

If the new output flange is longer: Install a thinner, by the difference, S4shim.

If the old output flange is longer: Install a thicker, by the difference, S4shim.

The following adjustment shims are available:

Size (mm)	Part No.
0.65	02C 409 280
0.70	02C 409 280A
0.75	02C 409 280B
0.80	02C 409 280C
0.85	02C 409 280D
0.90	02C 409 280E
0.95	02C 409 280F
1.00	02C 409 280G
1.05	02C 409 280H
1.10	02C 409 280J
1.15	02C 409 280K
1.20	02C 409 280L
1.25	02C 409 280M
1.30	02C 409 280N
1.35	02C 409 280P
1.40	02C 409 280Q