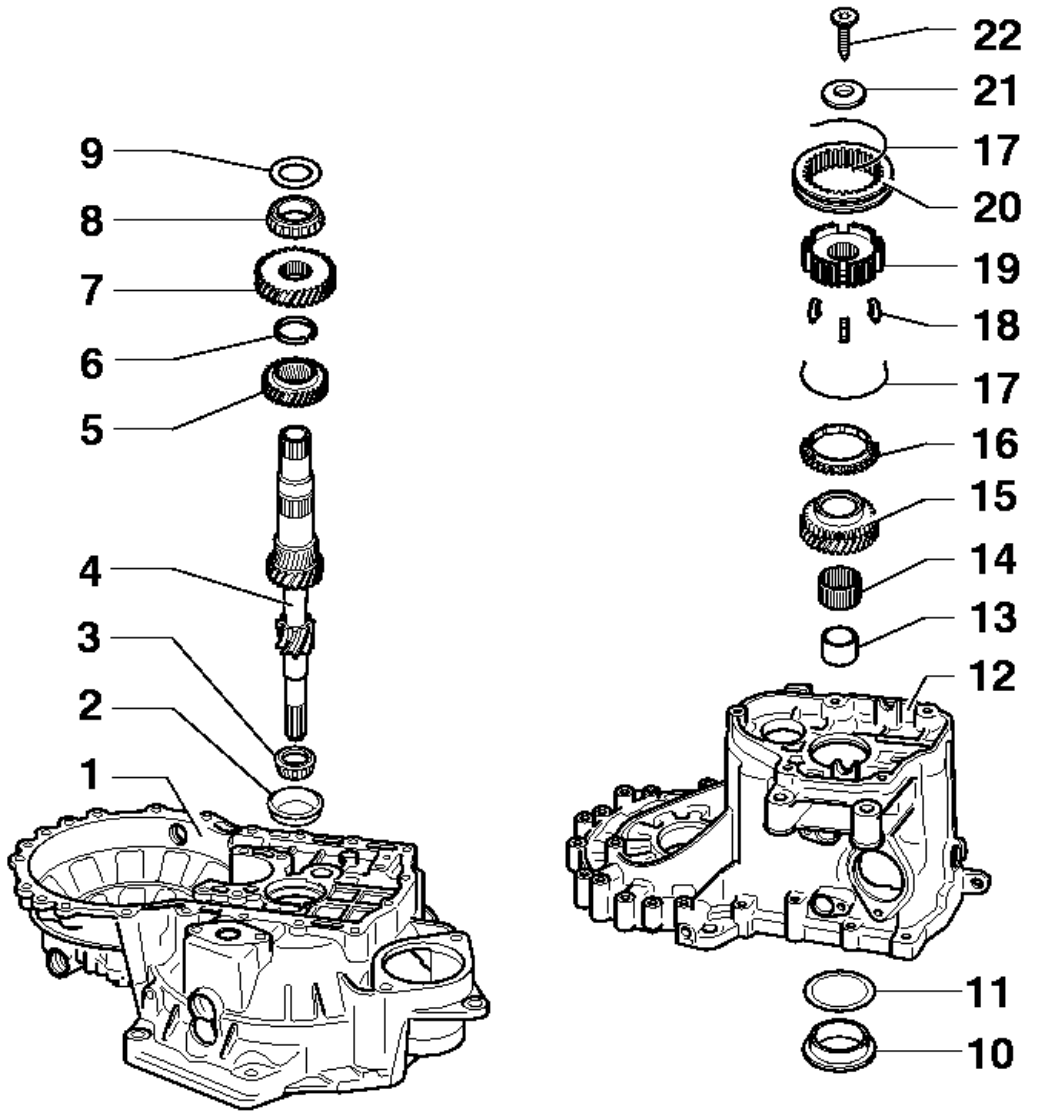

Notes:

◆ When installing new gear wheels, consult technical data =>Page 00-3.

◆ If the position of the taper roller bearings is affected when exchanging parts, the input shaft must be re-adjusted. See adjustment overview => Page 39-22

1 - Clutch housing

2 - Taper roller bearing outer race
- ◆ Removing => Fig.1
- ◆ Pressing in => Fig.2

3 - Taper roller bearing inner race
- ◆ Knock-off the input shaft with a drift
- ◆ Pressing on => Fig.3

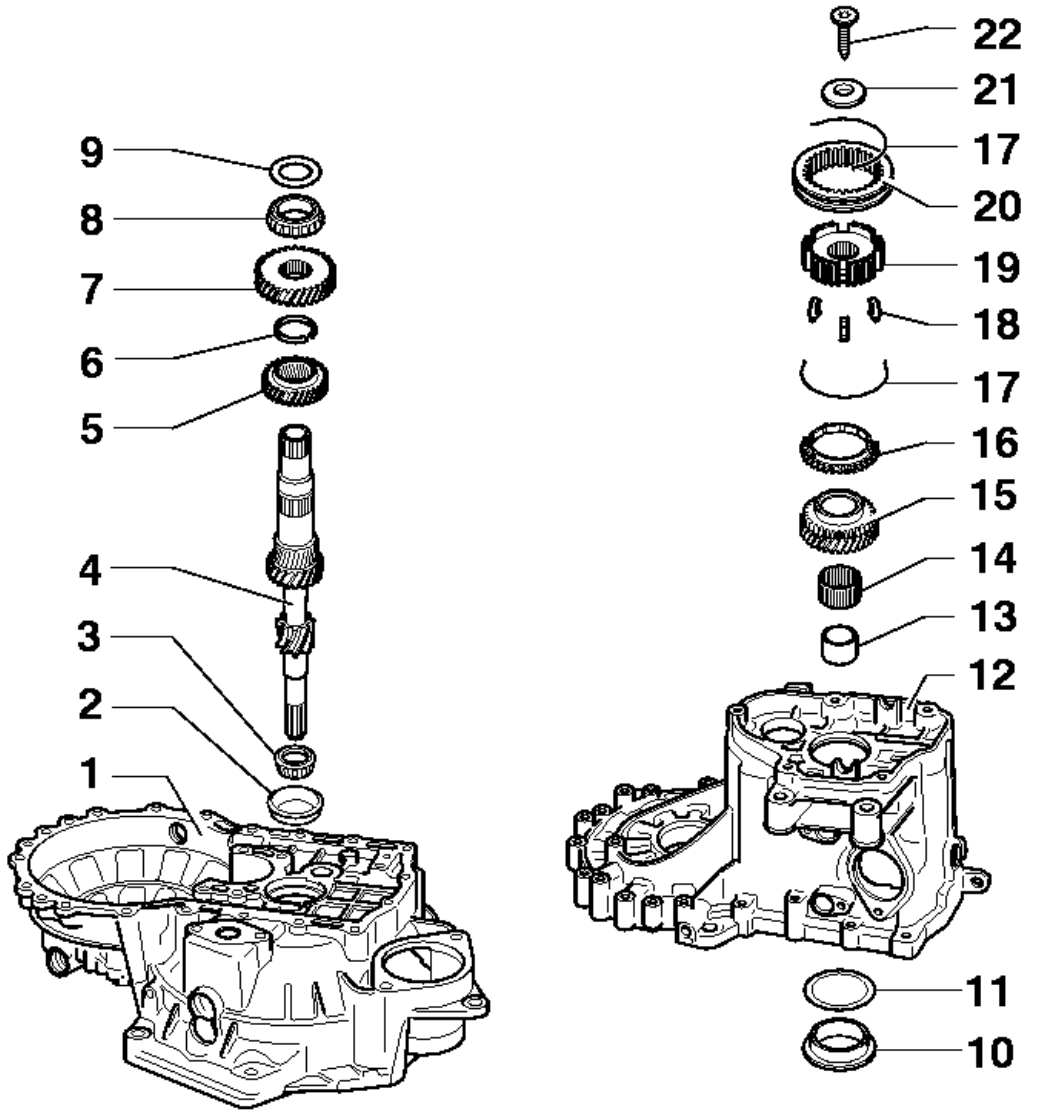

4 - Input shaft
- ◆ Adjusting => Page 35-13

5 - 3rd gear wheel
- ◆ Shoulder points to 4th gear
- ◆ Pressing off => Fig. 5
- ◆ Pressing on => Fig.6

6 - Circlip
- ◆ Always renew

7 - 4th gear wheel
- ◆ Pressing off with taper roller bearing inner race and sleeve => Fig.4
- ◆ Pressing on => Fig.7
- ◆ Collar faces to 3rd gear

8 - Taper roller bearing inner race
- ◆ Pressing off with 4th gear wheel and sleeve => Fig.4
- ◆ Pressing on => Fig. 8

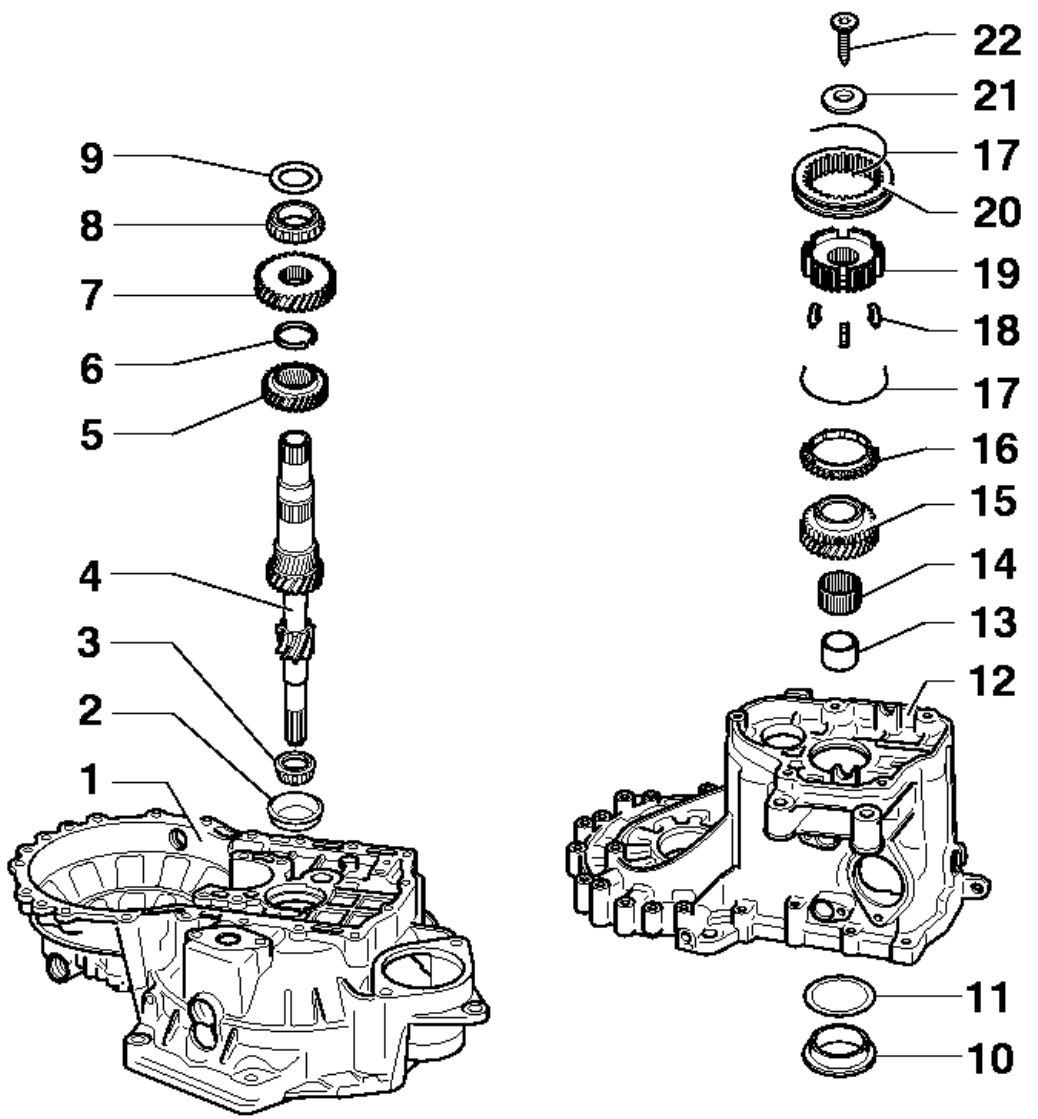

9 - Thrust washer

10 - Taper roller bearing outer race
- ◆ Pressing out => Fig.10
- ◆ Pressing in => Fig.11

11 - Shim
- ◆ Determining thickness => adjusting input shaft, Page 35-13

12 - Gearbox housing

13 - Sleeve
- ◆ For needle roller bearing
- ◆ Press off with 4th gear wheel and taper roller bearing inner race
  => Fig.4
- ◆ Pressing on => Fig.9
- ◆ Place thrust washer on before installing (item 9)

14 - Needle roller bearing

15 - 5th gear wheel
- ◆ Pull off together with 5th gear synchro-hub
  =>from Page 34-89

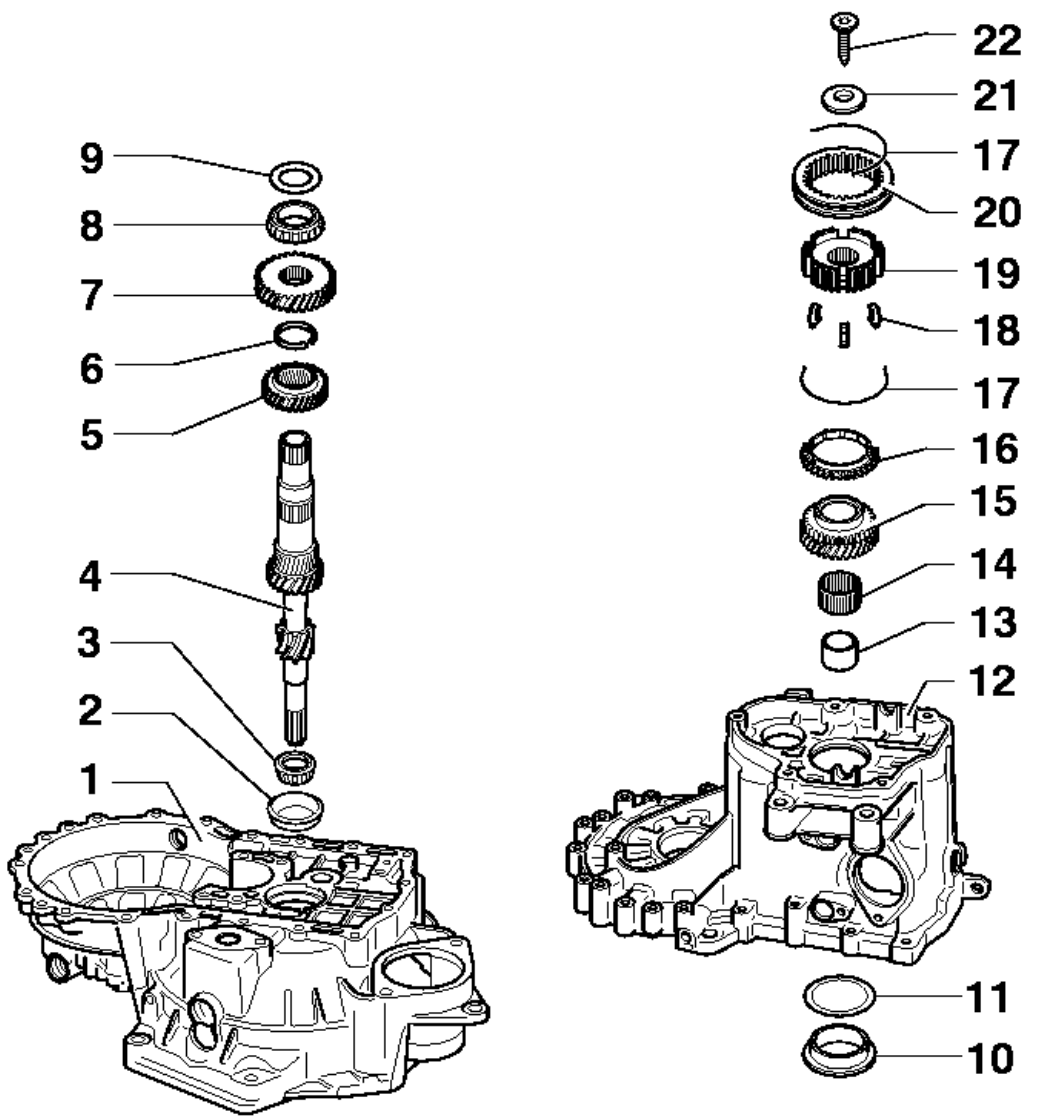

16 - 5th gear synchro-ring
- ◆ With cast locking pieces
  => Illustration N35-0018, Page 34-104
- ◆ Check for wear
  => Page 34-103

17 - Spring
- ◆ Installation position => Fig.13

18 - Lock pieces (Qty. 3)
- ◆ Installation position => Fig.12

19 - 5th gear synchro-hub
- ◆ Removing and installing
  => from Page 34-89

20 - 5th gear locking collar
- ◆ Removing and installing
  =>from Page 34-89

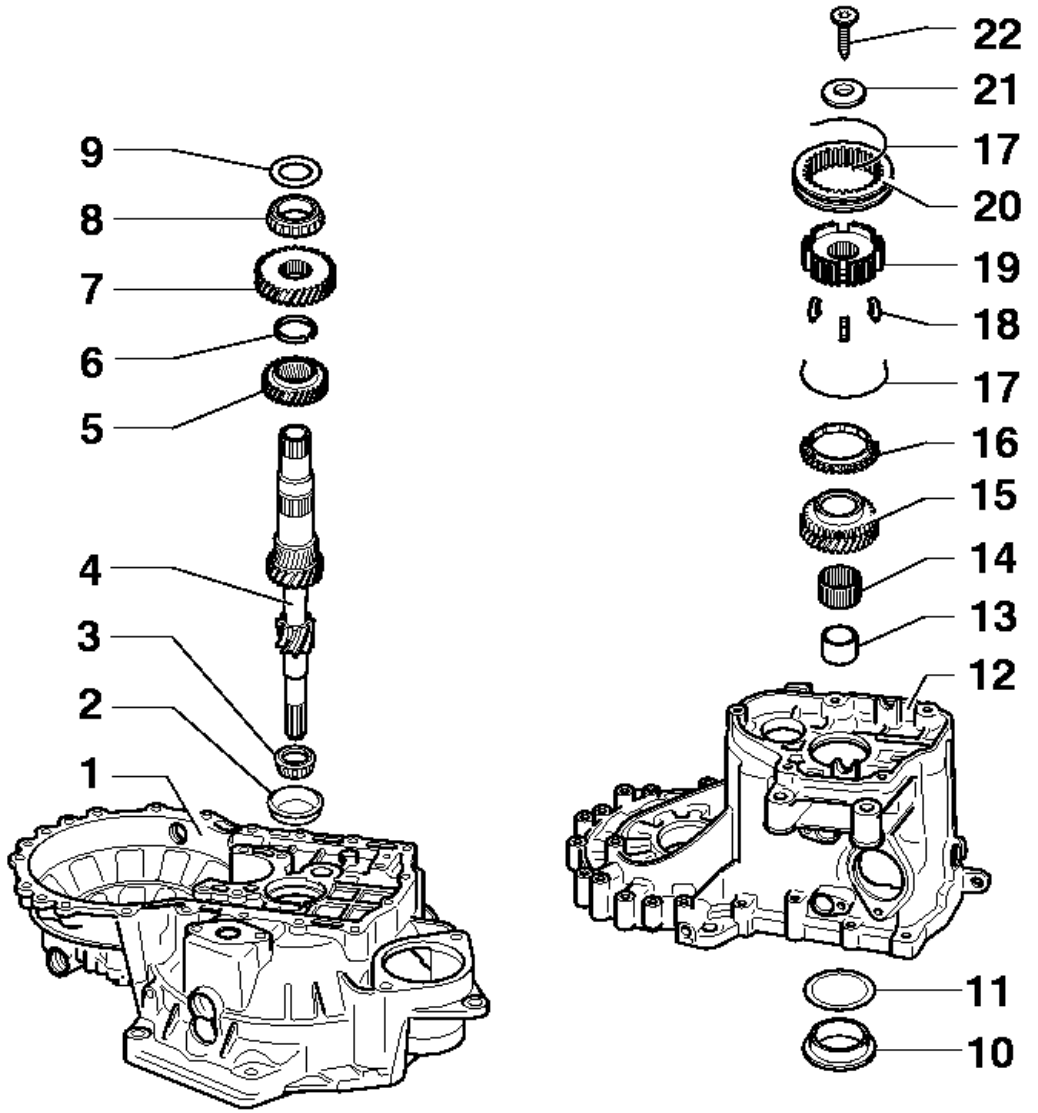

21 - Dished washer

◆ Installation position => Page 34-105

22 - Torx socket head bolt M 10, 80 Nm

◆ Fitted piece on bolt head locates dished spring => Page 34-105

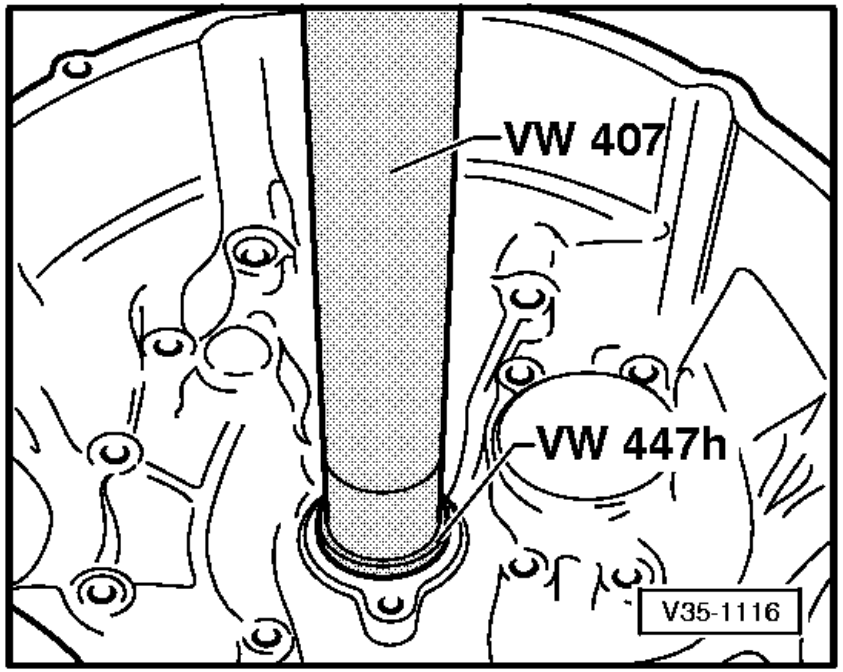

⇦ **Fig.1Pressing out taper roller bearing outer race**

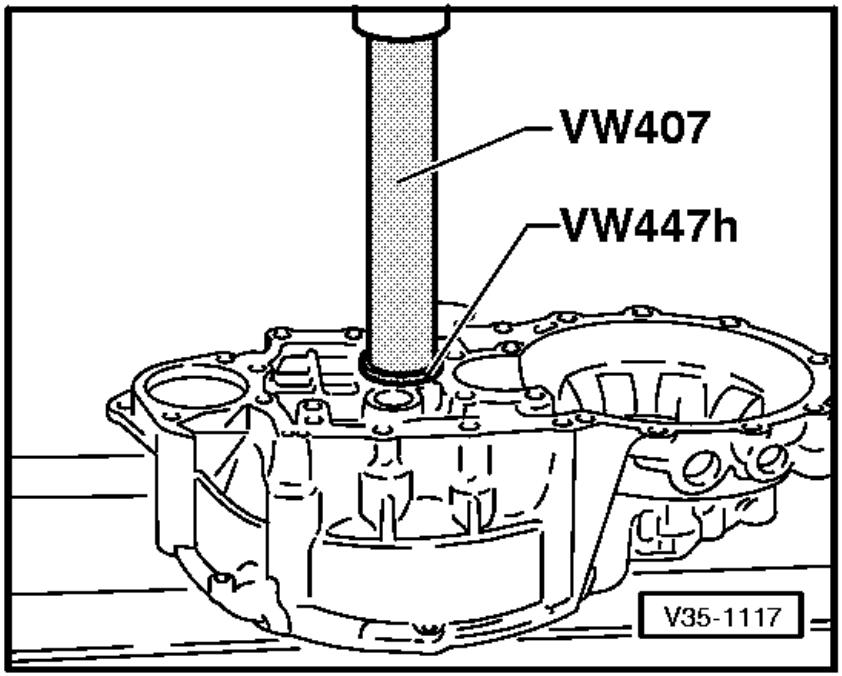

⇦ **Fig.2Pressing in taper roller bearing outer race**

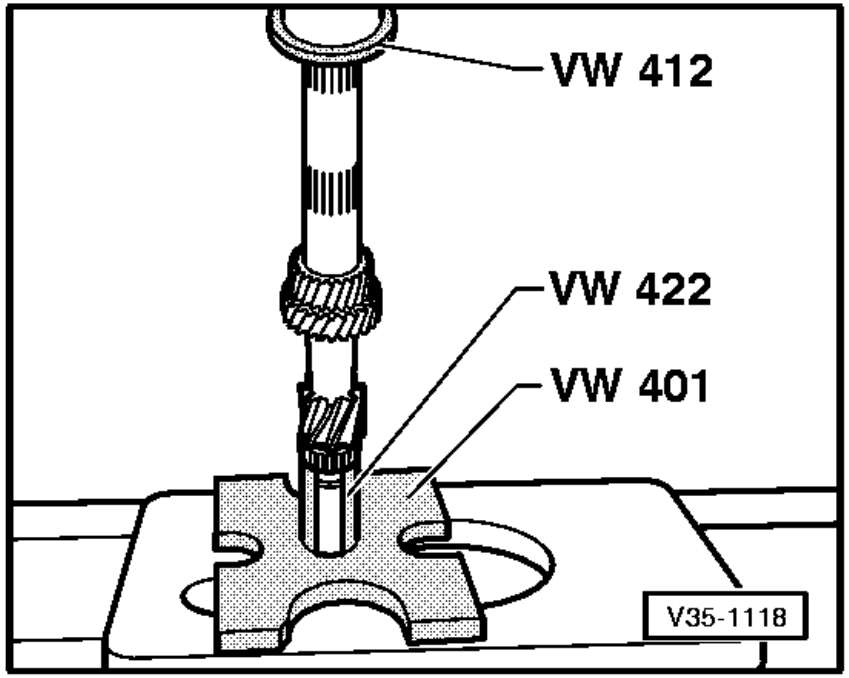

⇦ **Fig.3Pressing on taper roller bearing inner race**

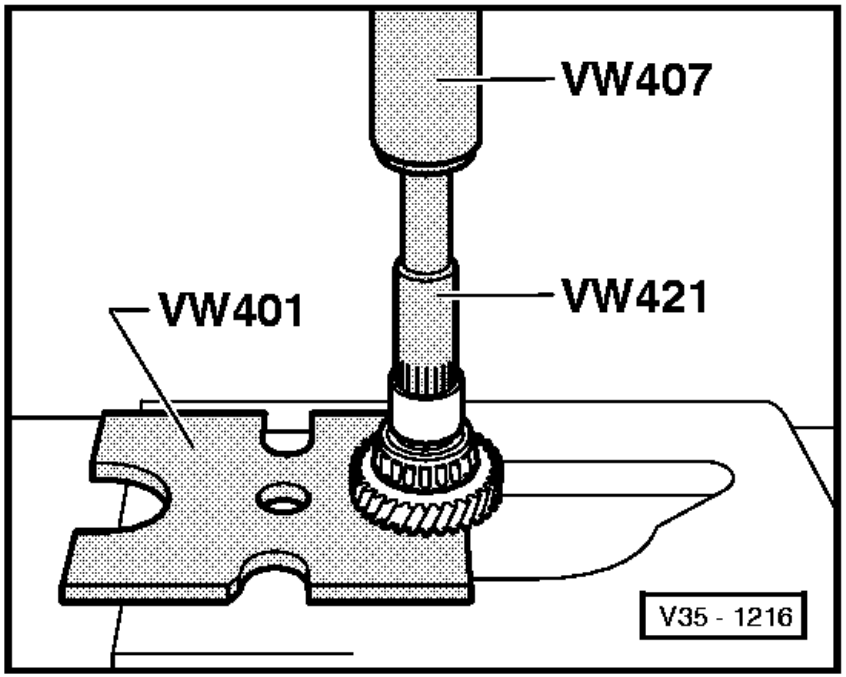

⇦ **Fig.4Pressing off 4th gear wheel with taper roller bearing inner race and sleeve**

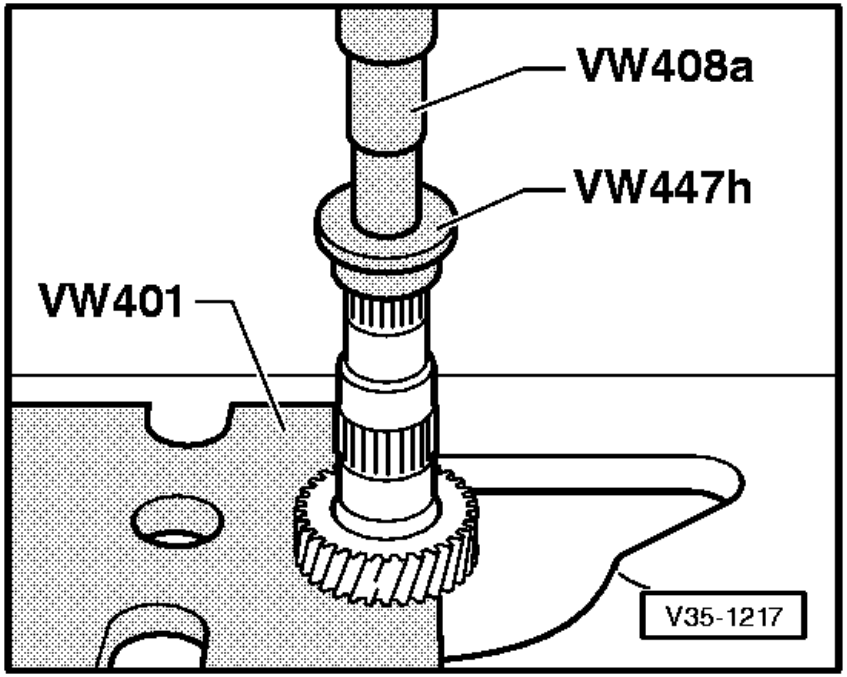

⇦ **Fig.5Pressing off 3rd gear wheel**

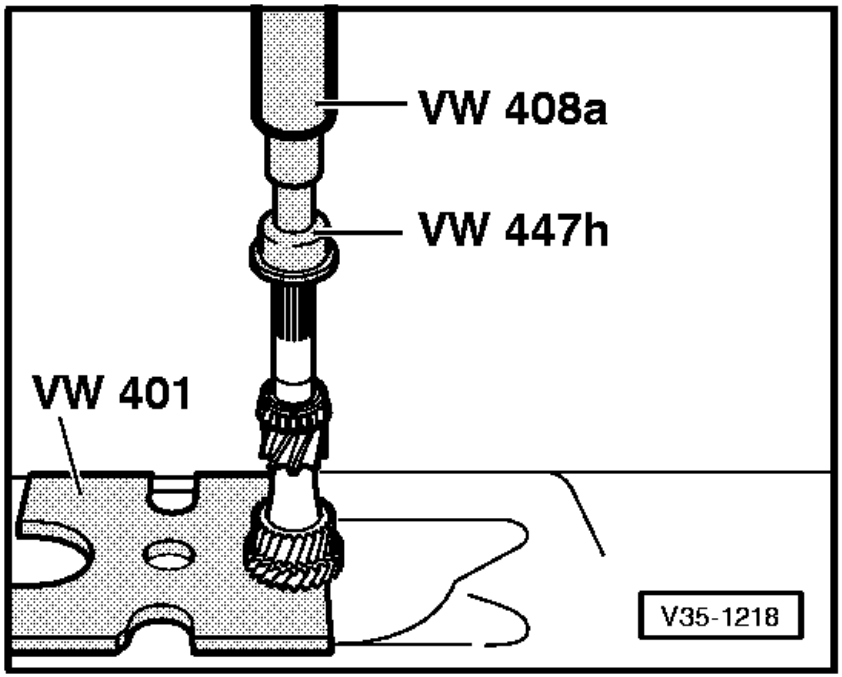

⇦ **Fig.6Pressing on 3rd gear wheel**

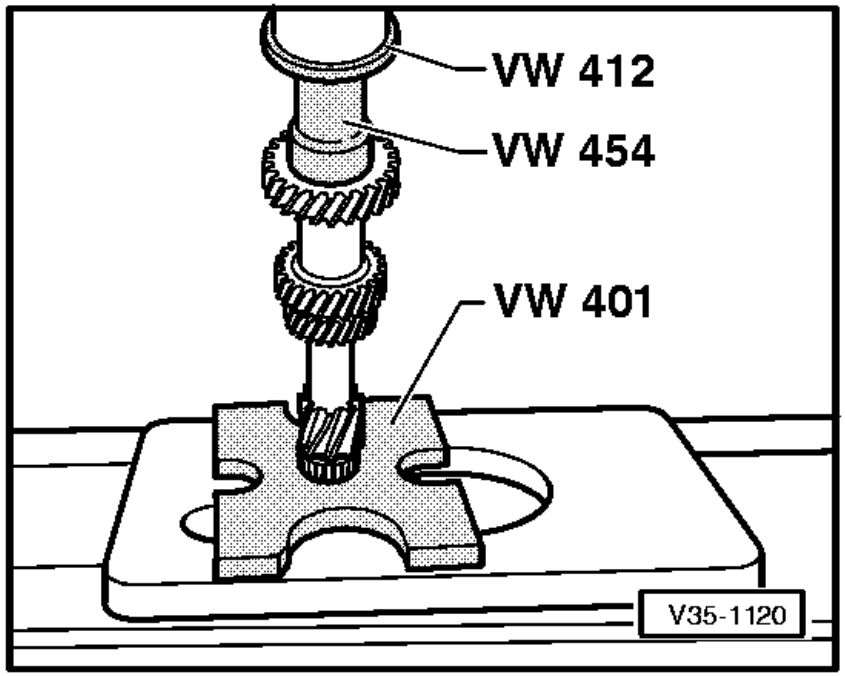

⇦ **Fig.7Pressing on 4th gear wheel**

Shoulder points to 3rd gear.

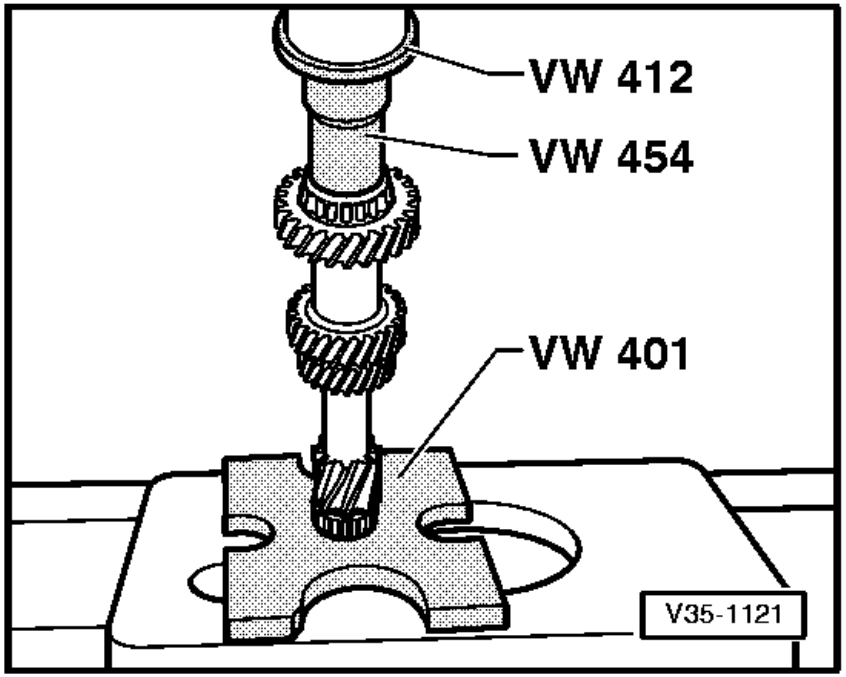

⇦ **Fig.8Pressing on taper roller bearing inner race**

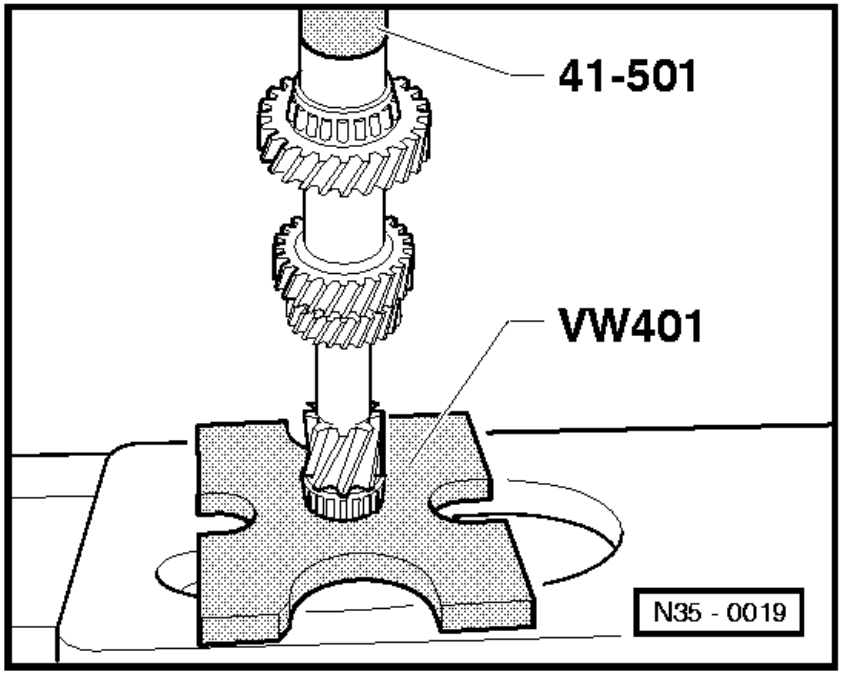

⇦ **Fig.9Pressing on sleeve for needle roller bearing**

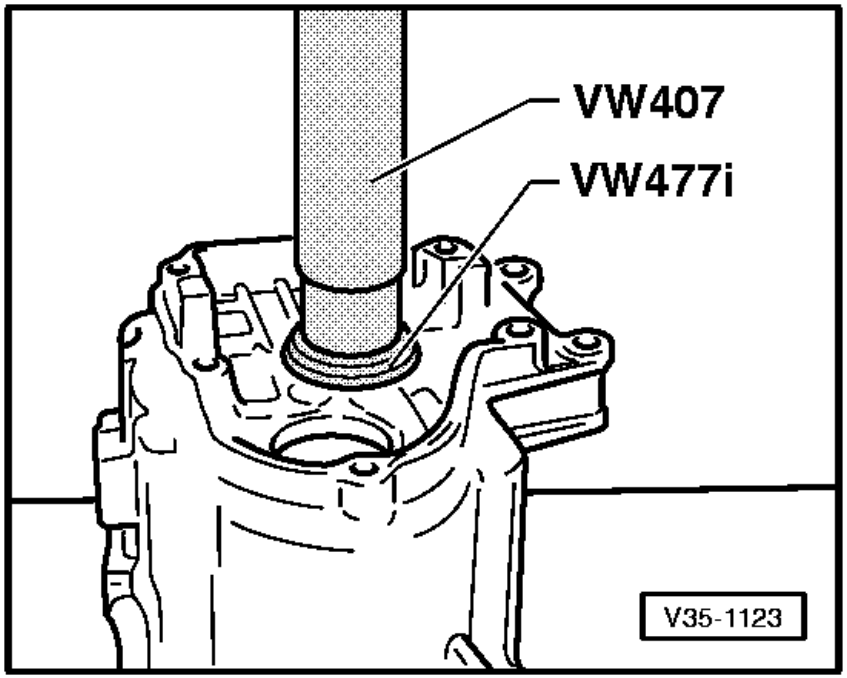

⇦ **Fig.10Pressing out taper roller bearing outer race**

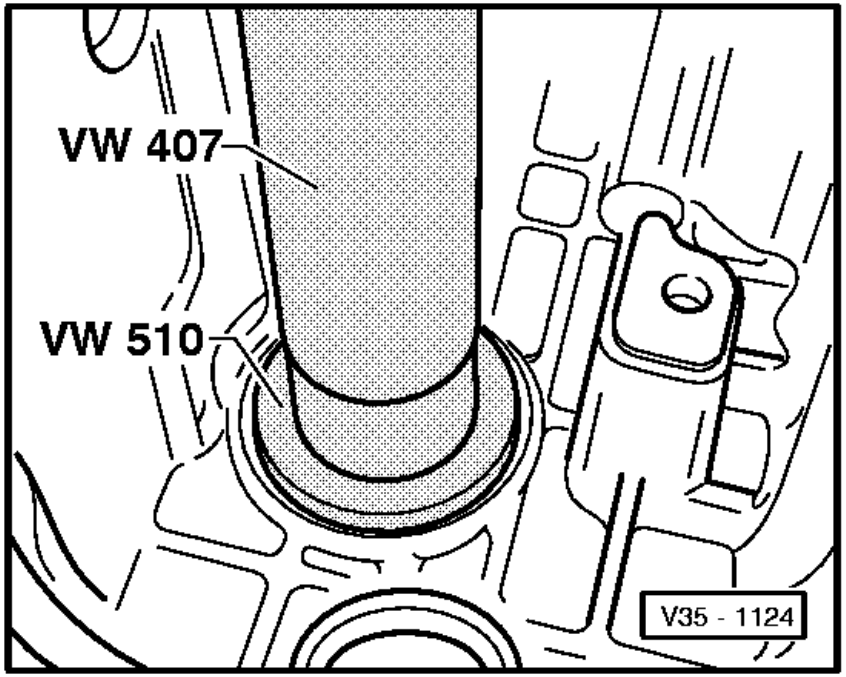

⇦ **Fig.11Pressing in taper roller bearing outer race**

- Install with shim after adjusting input shaft.

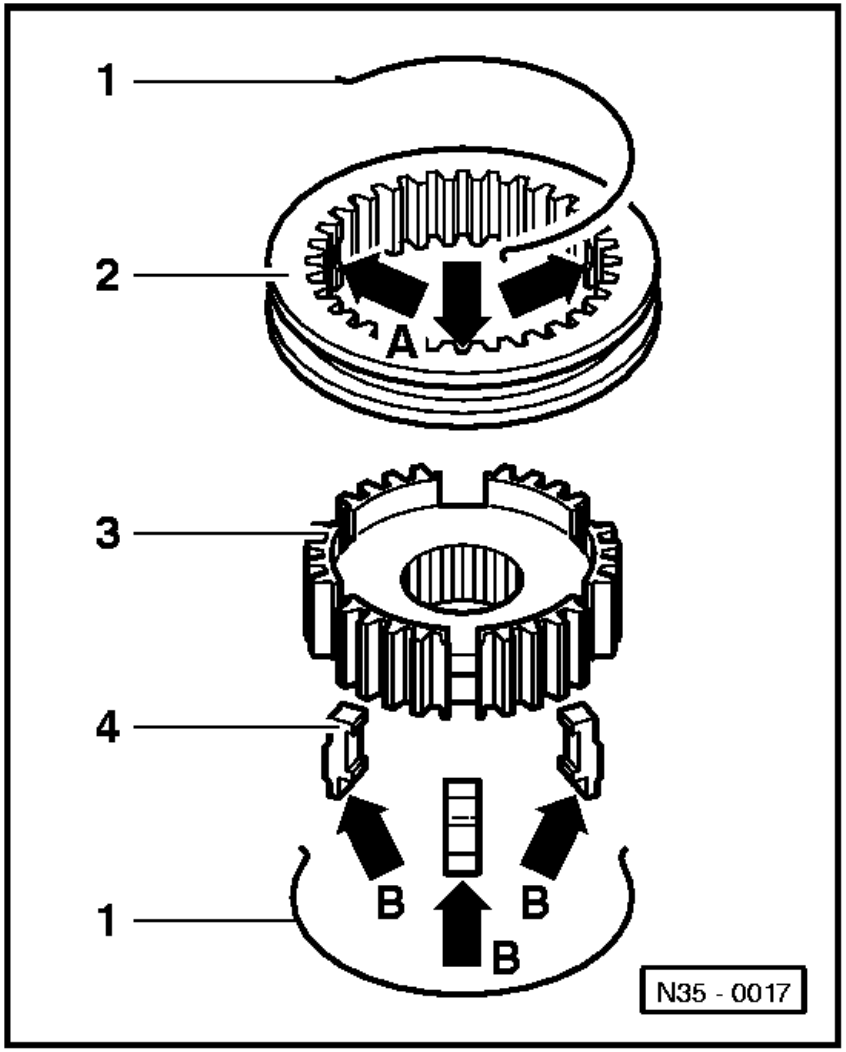

1 -Springs for lock pieces

2 -Locking collar
With 3 recesses (arrows A) for the locking pieces (item 4)

3 -Synchro-hub

4 -Locking pieces
Installation position: The thin extension (arrow B) faces the pointed teeth of the locking collar (item 2)

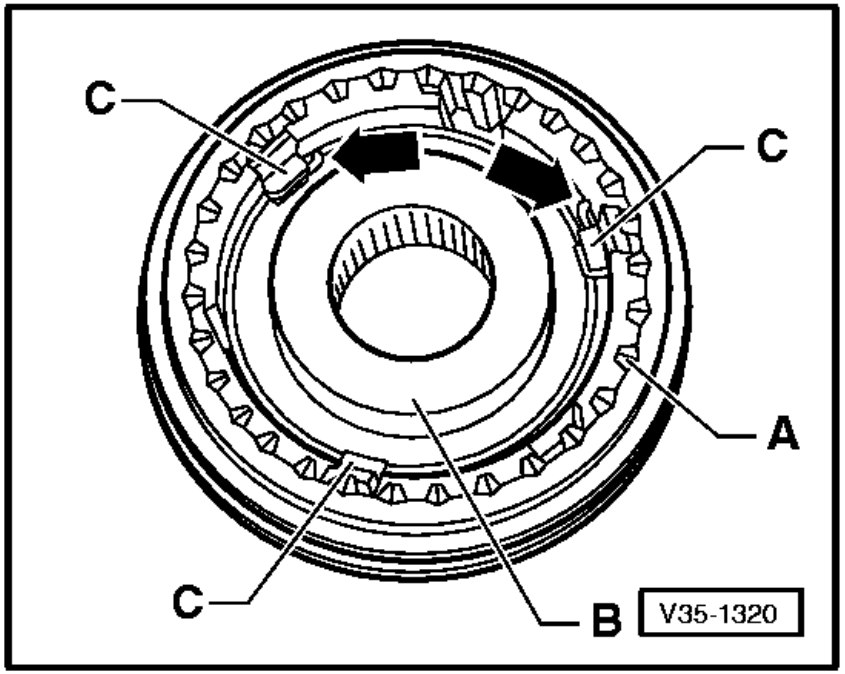

⇦ **Fig.13Assembling 5th gear locking collar/synchro-hub**

- Push locking collar over synchro-hub.

Locking collar pointed teeth -A- and synchro-hub shoulder -B- face in same direction. The recesses for the locking pieces in locking collar and synchro-hub must be aligned (Fig.12).

- Insert locking pieces (Installation position: Fig.12).

- Insert springs offset by 120° underneath lug -C-. The angled ends of the spring must be directly behind the locking pieces (arrows).