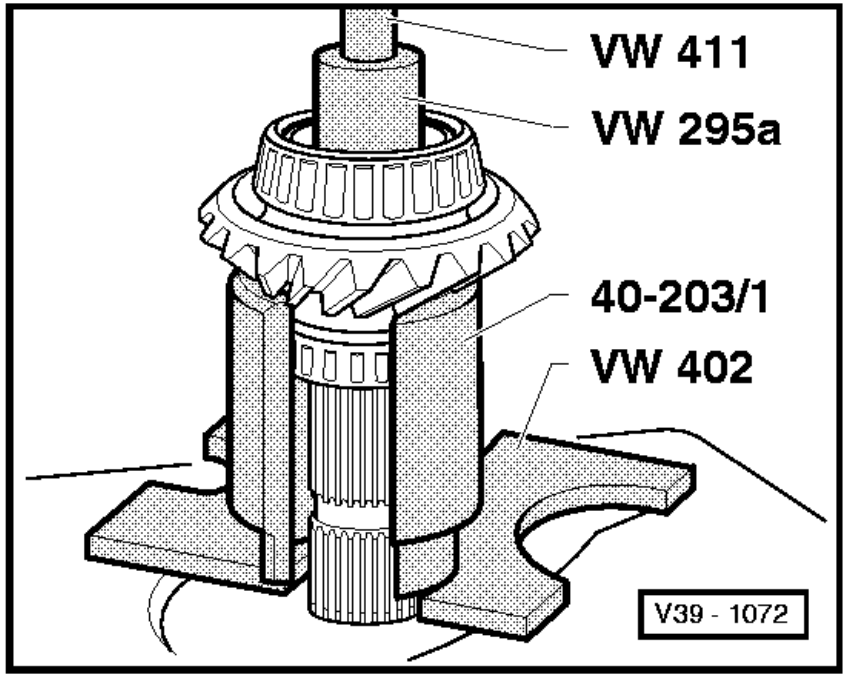

Rear axle housing has been removed from bevel gear housing => Page 39-125.

⇦ - Pressing bevel gear off.

Note:

Check bevel gear for damage after pressing off.

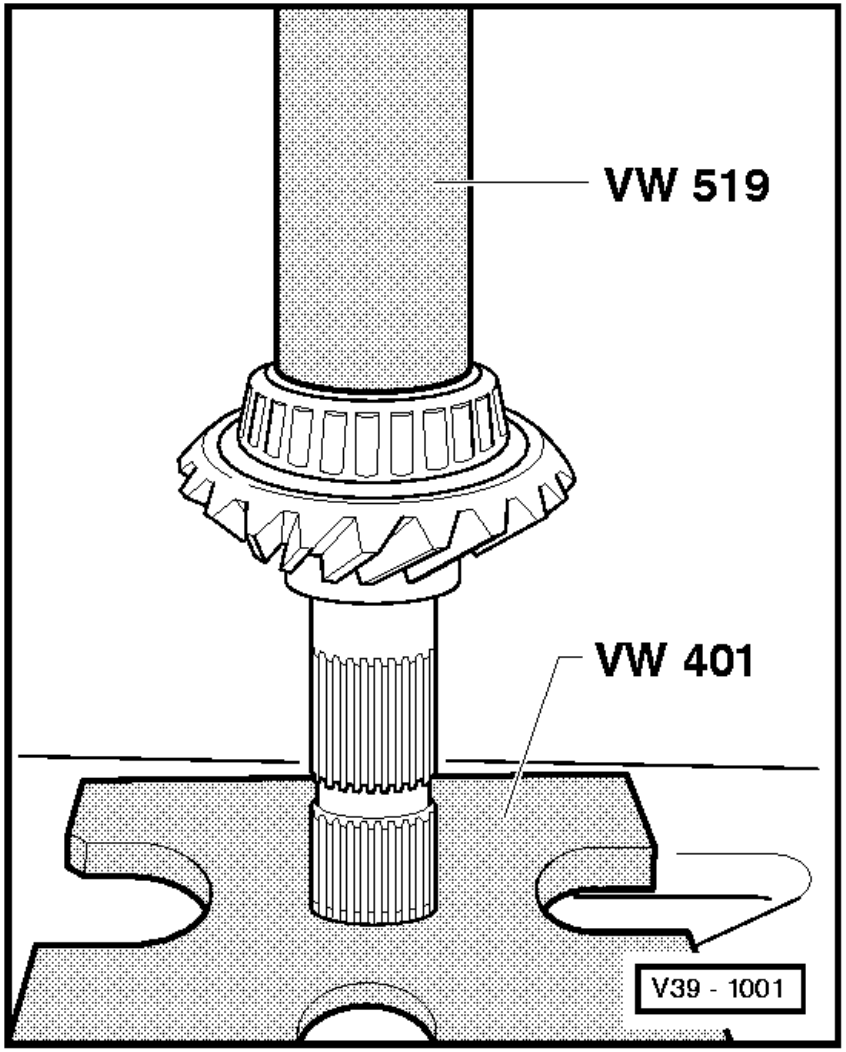

- Heat bevel gear to approx. 100 °C and place on so that input shaft and bevel gear splines align.

⇦ - Pressing bevel gear on.

Note:

In the illustration the pressing operations are shown with the taper roller bearing inner race. It makes sense that when replacing the drive set (shaft bevel gear/bevel gear) the bearings are also replaced.