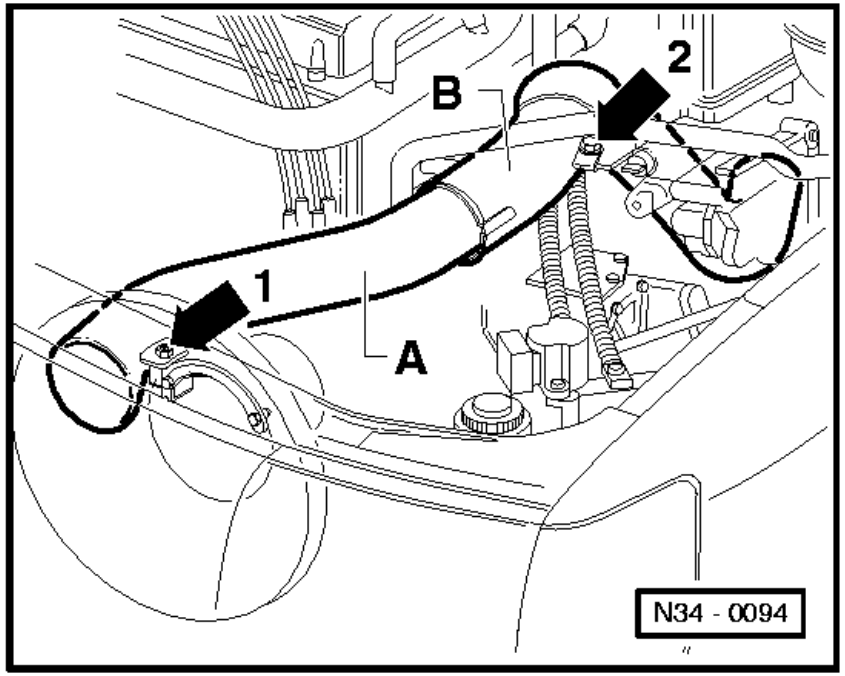

Removing

- With the ignition switched off disconnect the battery earth strap.

Note:

For vehicles with coded radio obtain radio code.

- Remove radiator cover.

On vehicles with 4 cylinder engine:

⇦ - Remove front pipe -A- and rear pipe -B- to ventilate the propshaft bearing from fan (arrow 1), ABS unit (arrow 2) and from heat shield.

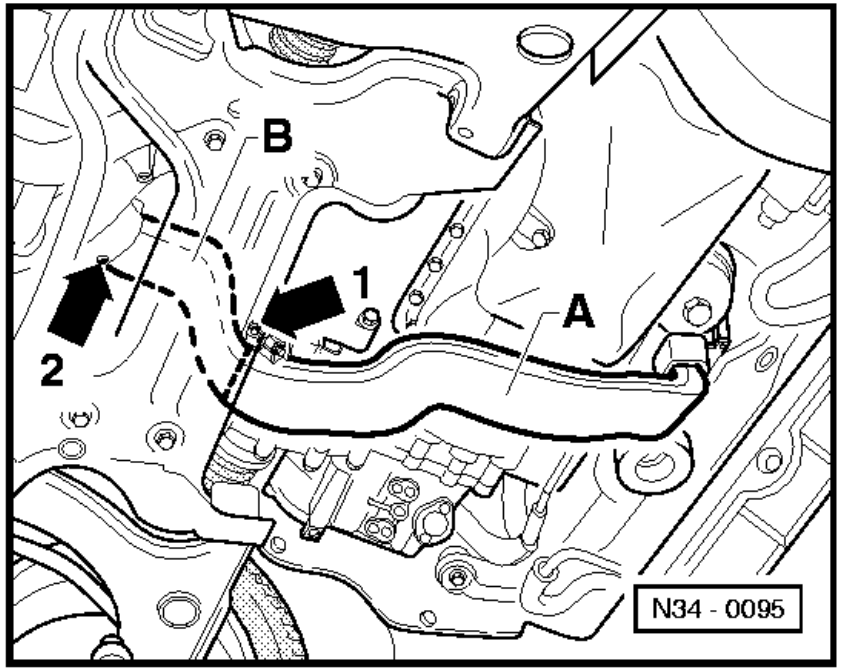

⇦ - Remove air duct -A- to cool the propshaft bearing (arrow 1) and pull off front fan connection.

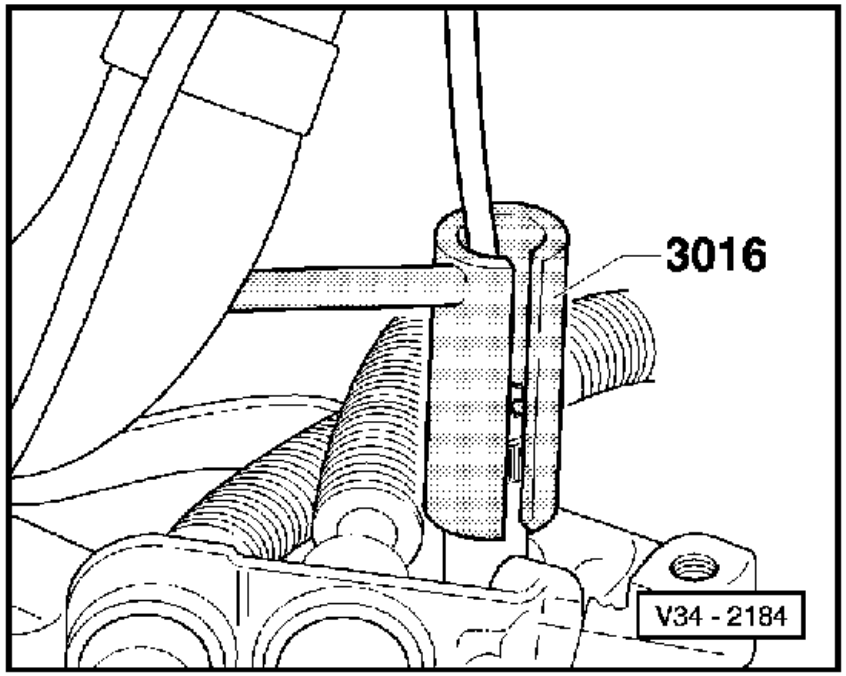

On vehicles with mechanical speedometer:

⇦ - Disconnect speedometer drive cable from gearbox.

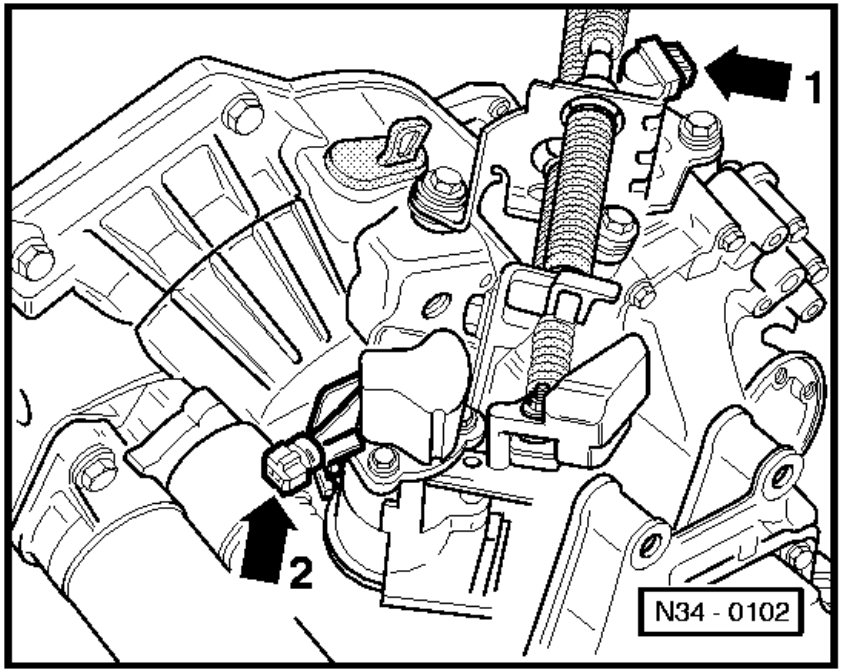

⇦ - Pull connector off sender (arrow 1).

- Pull reverse light connector off (arrow 2).

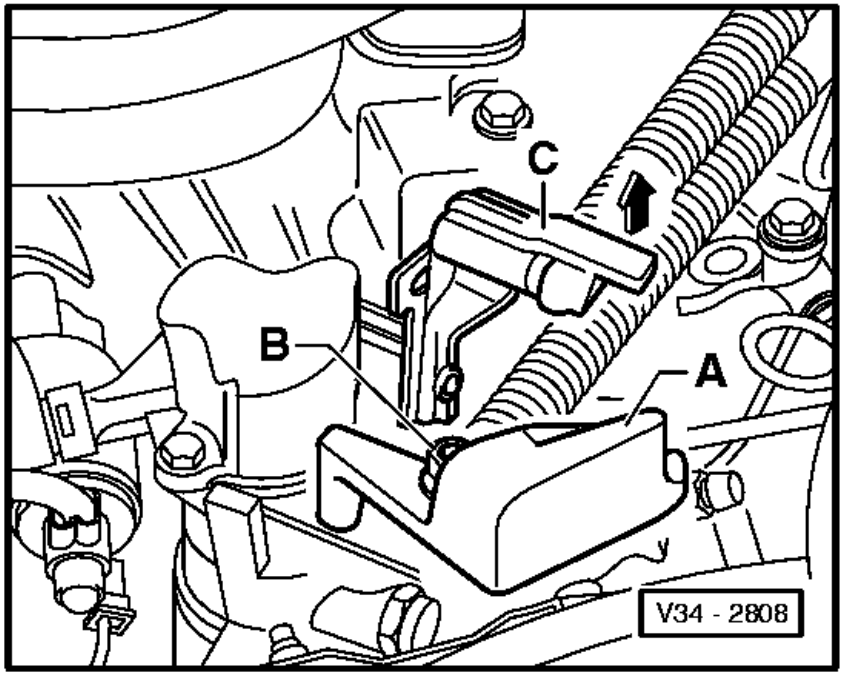

⇦ - Remove balance weight -A- and gear selector cable -B- from gear selector lever.

- Pull gate selector cable off actuating arm/relay lever -C- to do this lift lug in direction of arrow.

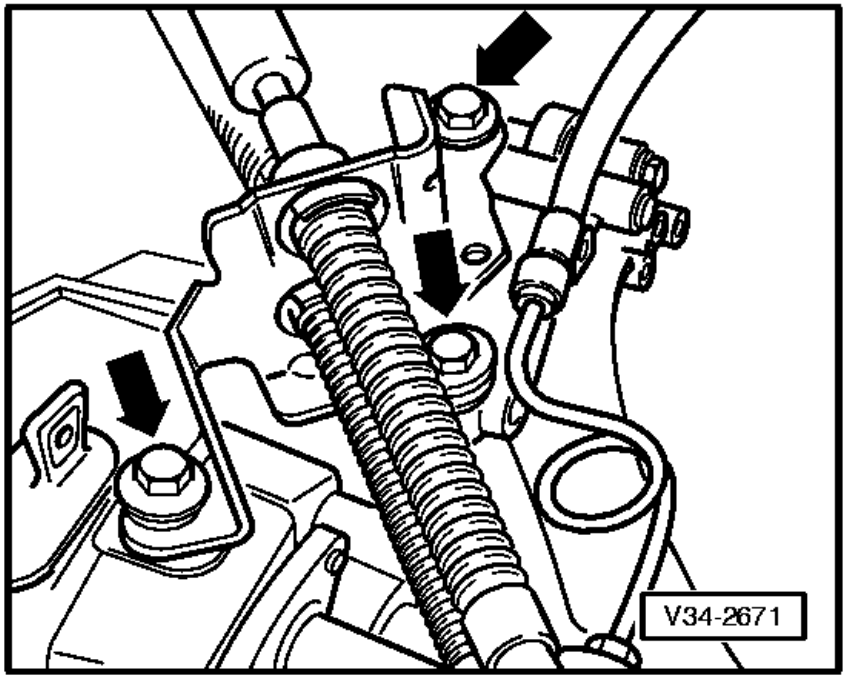

⇦ - Remove cable support bracket from gearbox (arrows) and tie up, first unclip hose on cable support bracket if necessary.

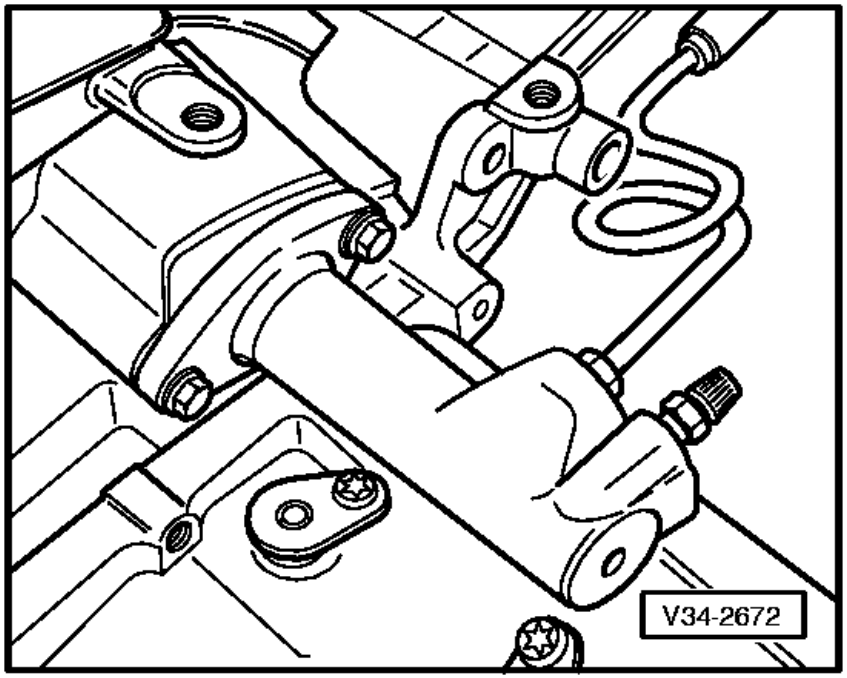

⇦ - Remove slave cylinder place to side and secure with wire, do not disconnect pipes.
Note:

Do not depress clutch pedal.

- Remove coolant system expansion reservoir and lay to one side. Do not open coolant system.

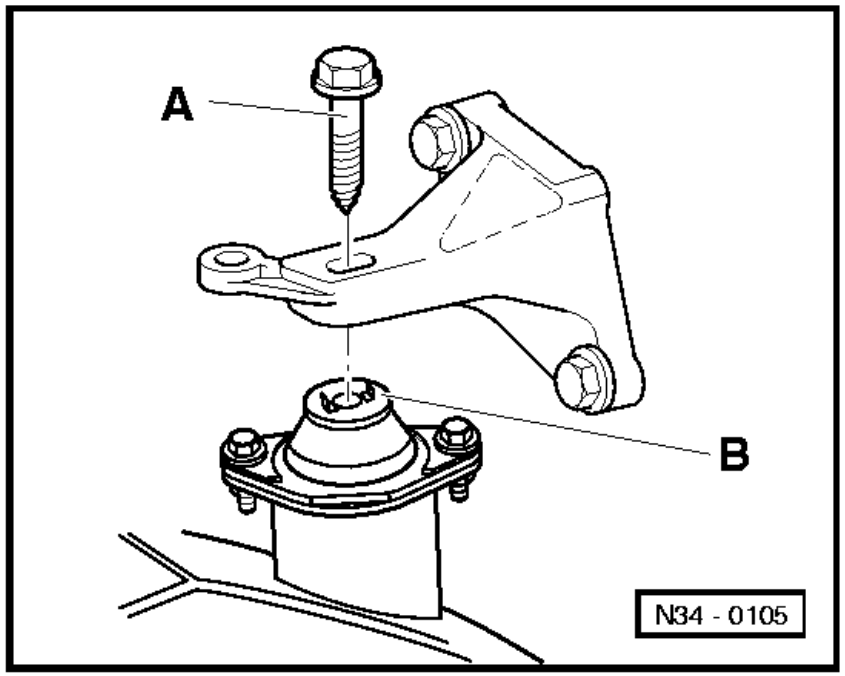

⇦ - Remove hexagon bolt -A- from left-hand gearbox assembly mounting -B-.

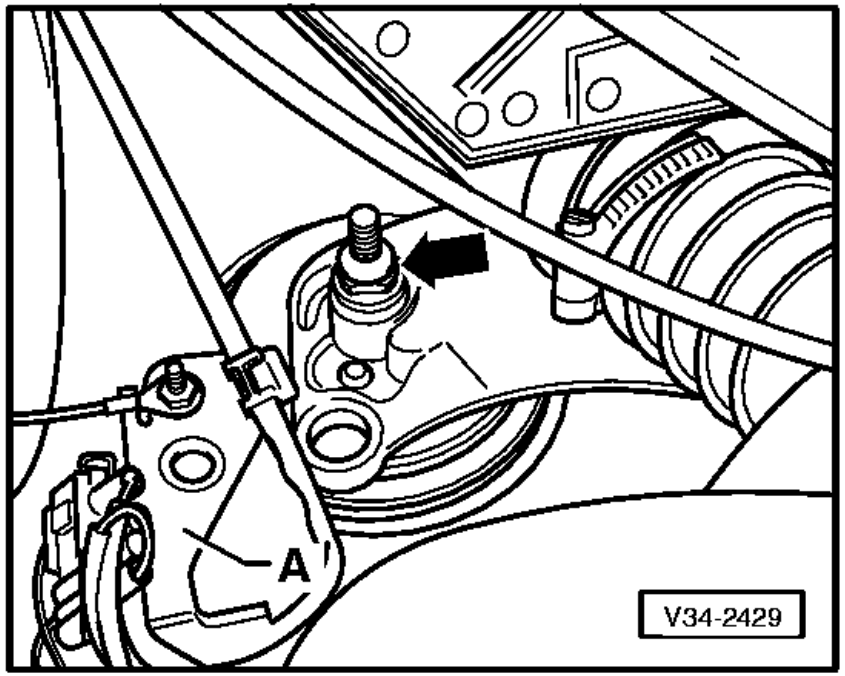

- Detach suction hose and place to side.

⇦ - Remove bolt (arrow) on right-hand engine console. First remove connector mounting plate -A-.

On vehicles with 4 cylinder engine:

- Remove fan with cover and mounting plate.

- If fitted remove electrical connector securing plate from front console.

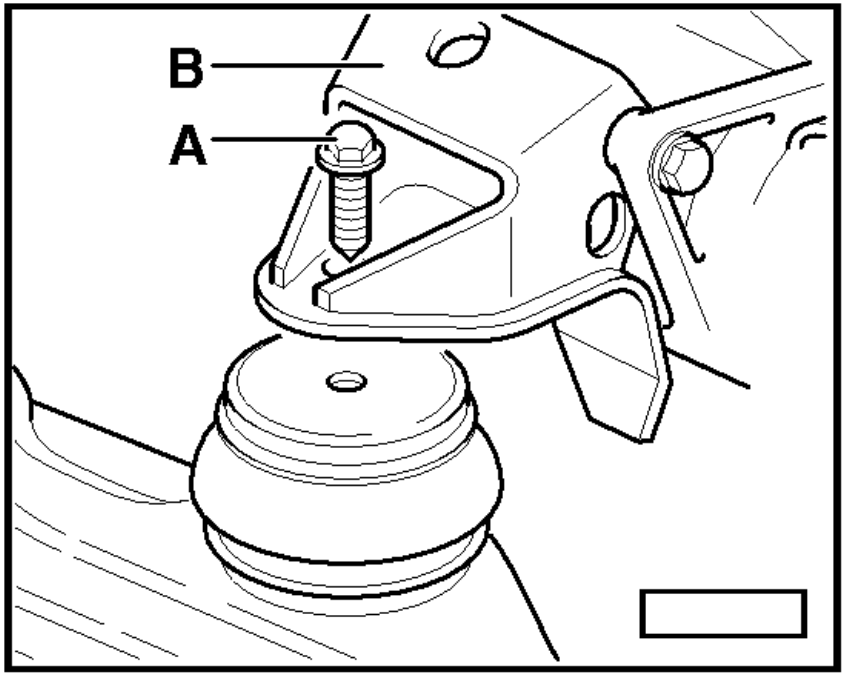

⇦ - Remove bolt -A- for console -B-.

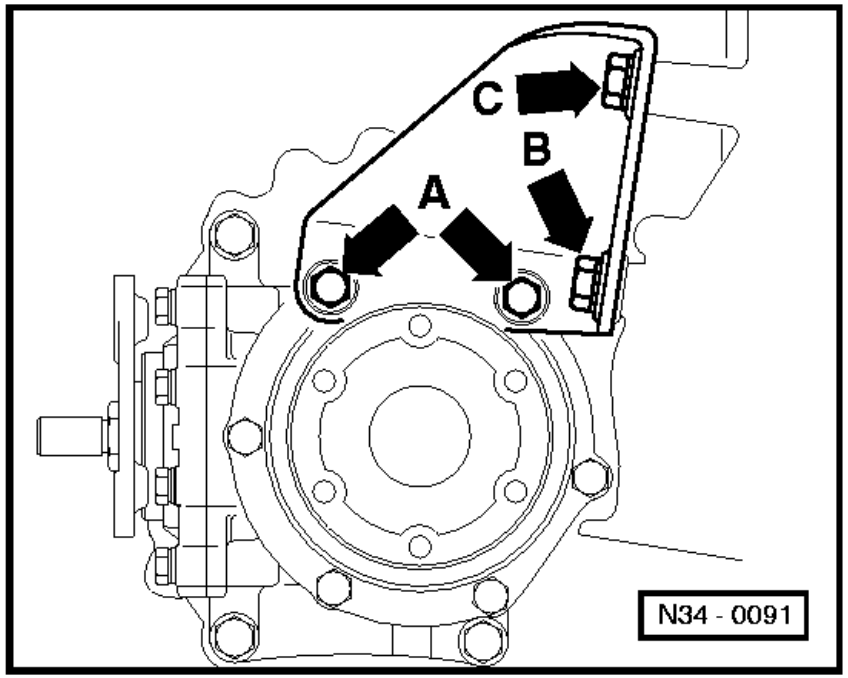

On vehicles with 6 cylinder injection engine:

⇦ - Remove bevel box mounting plate from engine and bevel box (arrows -A-, -B- and -C-).

- Remove power assisted steering pipe bracket from gearbox.

On vehicles with 4 cylinder engine:

On vehicles with 6 cylinder injection engine:

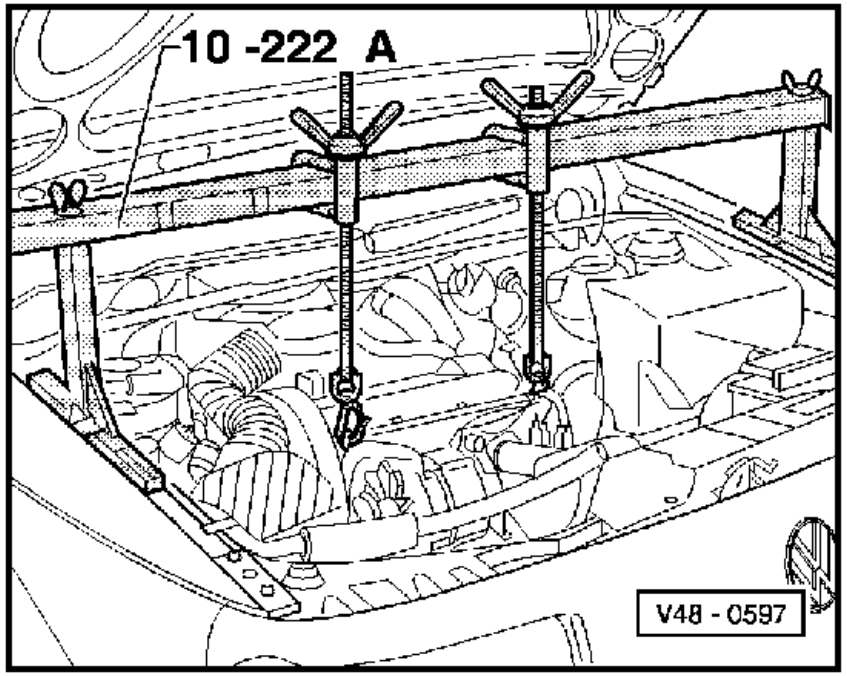

⇦ - Install support bar 10-222A in conjunction with feet 10-222 A/1.

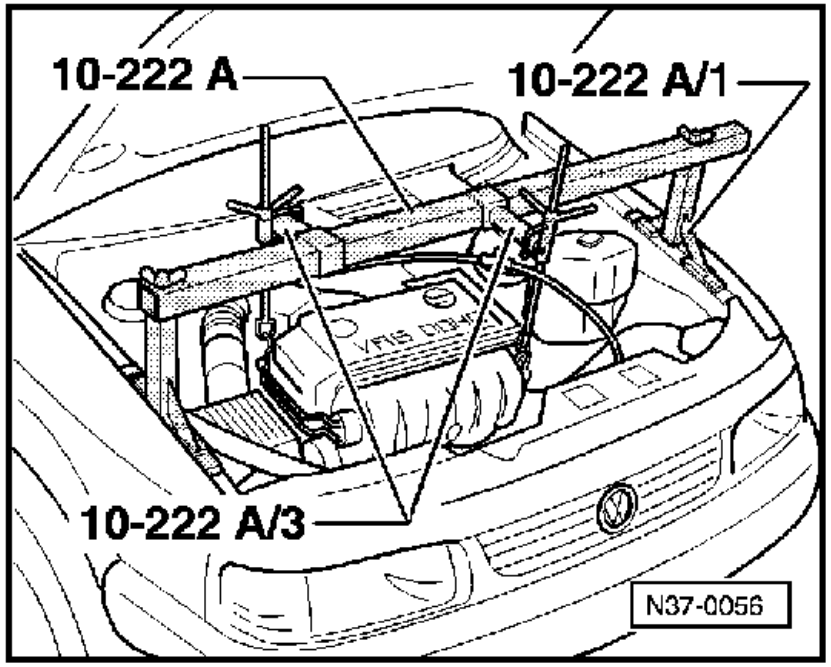

On vehicles with 6 cylinder injection engine:

⇦ - Install support bar 10-222A in conjunction with adapter 10-222 A/3 and feet 10-222 A/1.

Note:

Before fitting the support hooks of the support bar, remove hose and wire connections from engine in the area of the lifting eyes, so that they are not damaged.

- Take weight of engine/gearbox assembly on the spindles.

On vehicles with 4 cylinder engine:

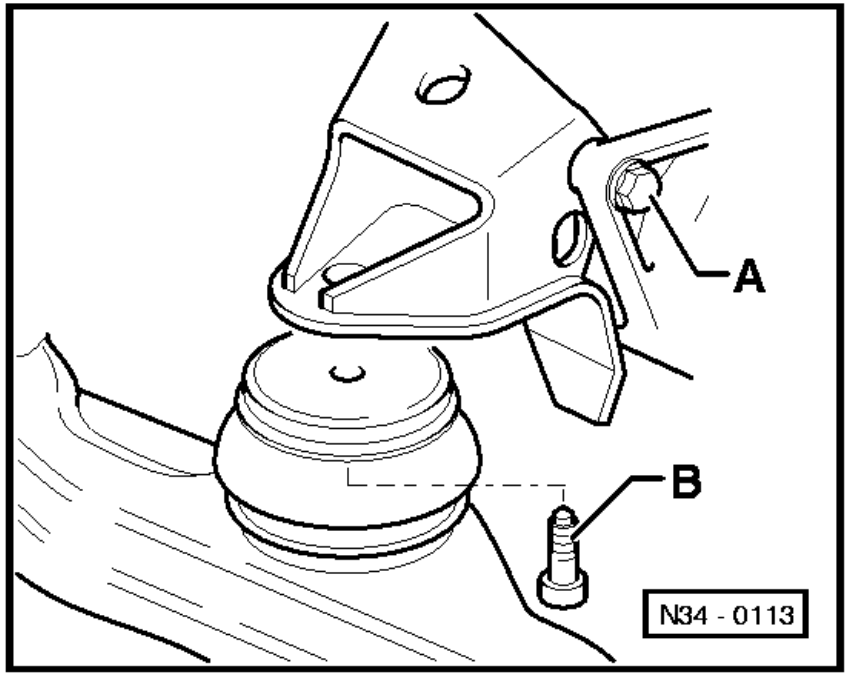

⇦ - Remove front console (bolt -A-).

- Remove front engine mounting (bolt -B-).

On vehicles with 6 cylinder injection engine:

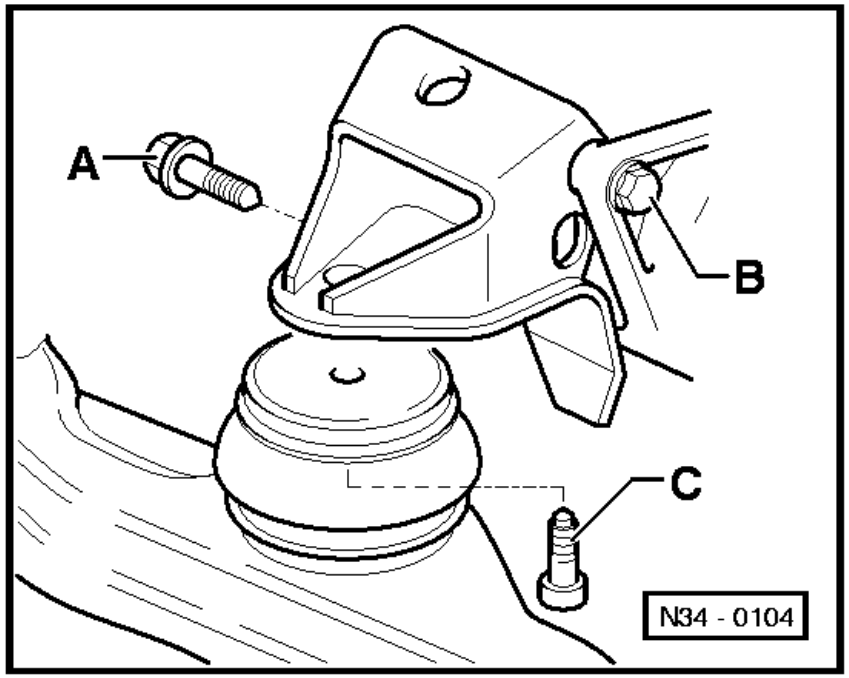

⇦ - Remove front console (bolts -A- and -B-).

- Remove front engine mounting (bolt -C-).

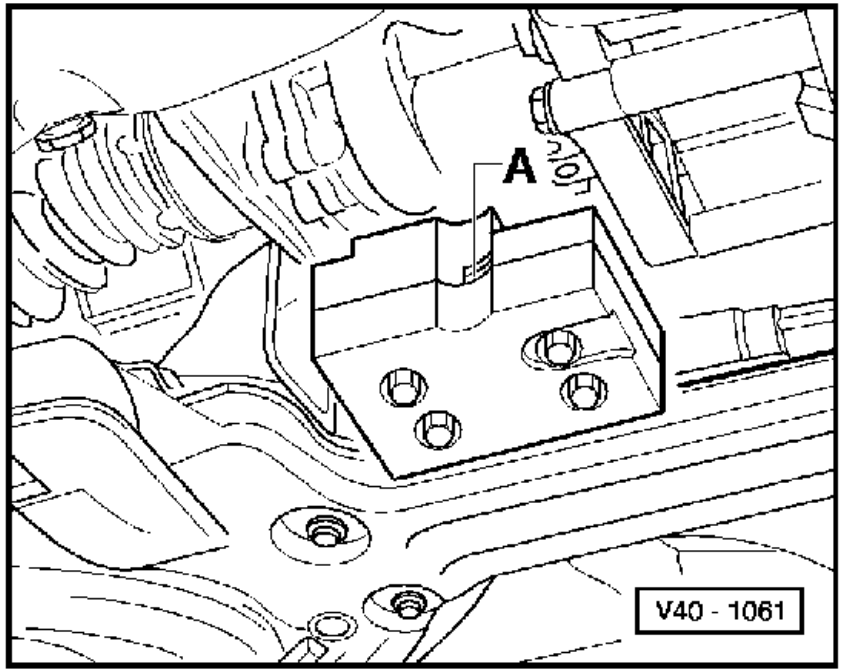

⇦ - Remove balance weight -A- from assembly carrier. Mark installation position.

On vehicles with 6 cylinder injection engine:

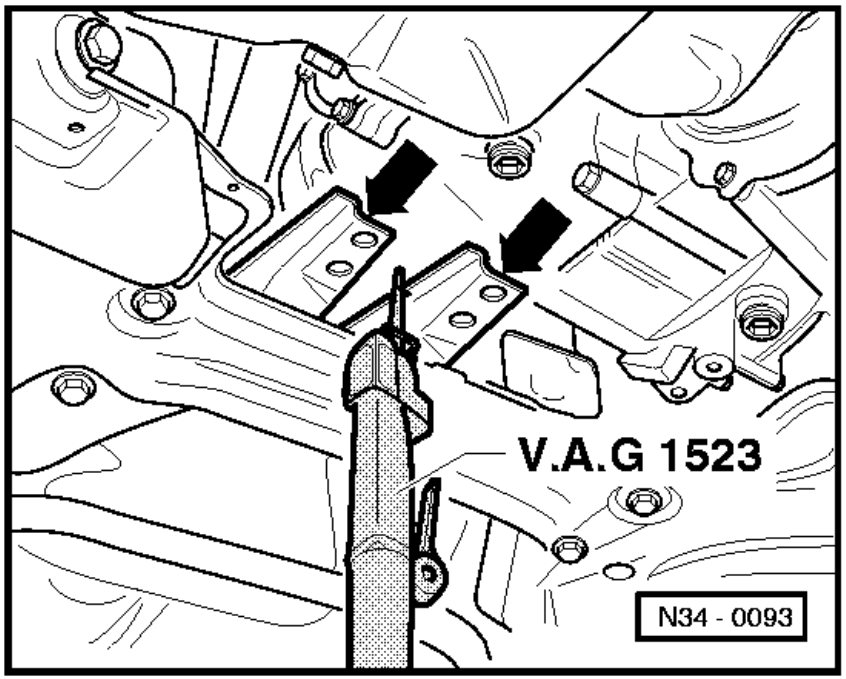

⇦ - Cut balance weight mounting (arrows) on assembly carrier off flush using body saw V.A.G 1523. Do not damage assembly carrier.

Warning!
Always wear protective glasses.

- If necessary repair paint work damage as follows:
  Remove grease remains with Nitro thinners L 001 600.
  Apply 2 component acrylic paint (ALN 769 041 with hardener ALZ 009 001).

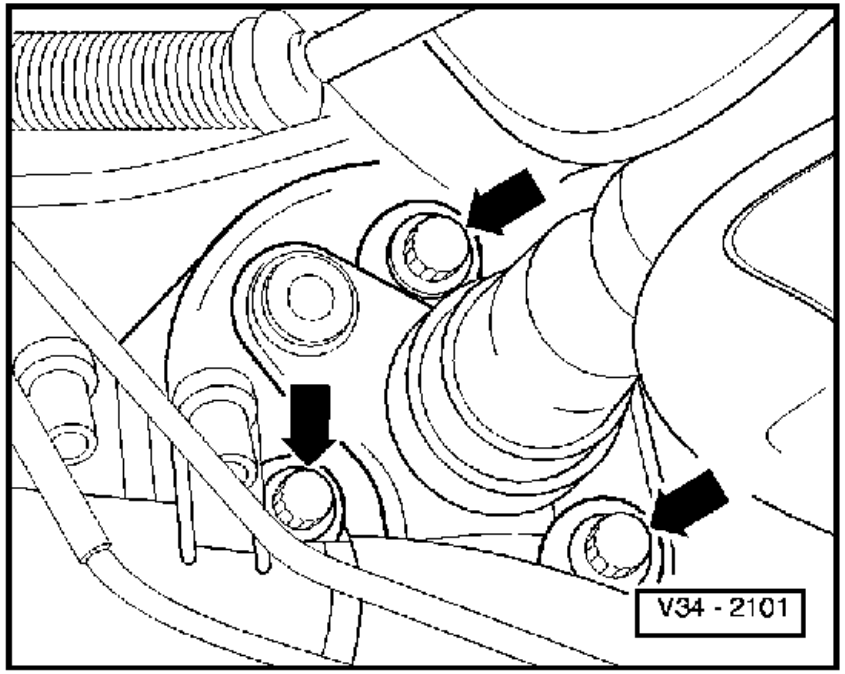

- Separate exhaust system in front of catalyst.
=> Repair group 26; Removing and installing parts of exhaust system.=>

- Secure catalyst.

- Mark position of propshaft with flexible coupling to bevel box flange.

⇦ - Disconnect propshaft flexible coupling from bevel box flange (arrows).

- Push propshaft back onto stop.

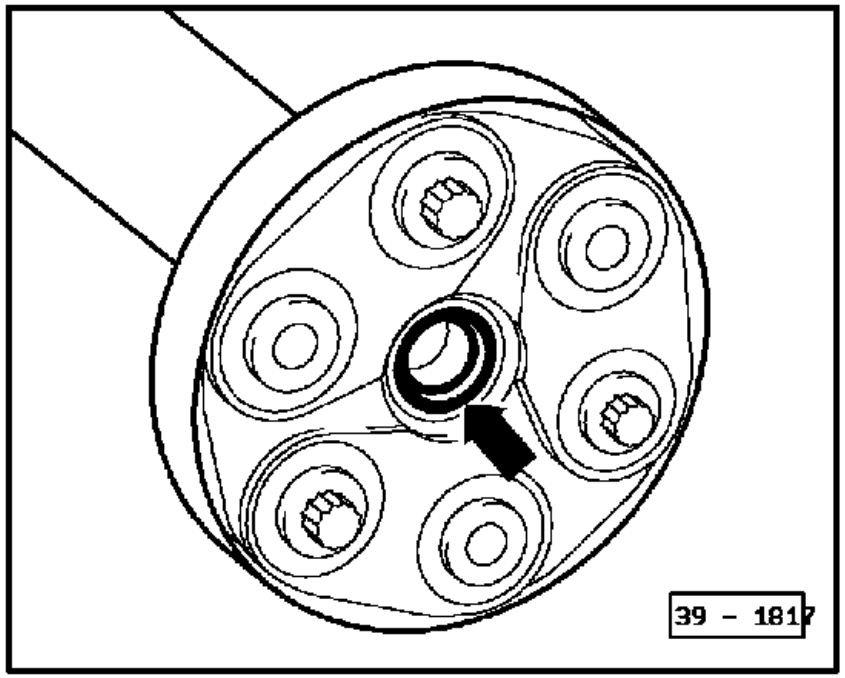

Note:

⇦ *When removing and installing the gearbox do not damage the sealing ring in the propshaft flange.*

- Remove drive shafts from gearbox.

On vehicles with 4 cylinder engine:

- Remove air deflector from right-hand wishbone

=> Running gear; Repair group 40=>

- Tie-up right-hand drive shaft forwards on wishbone.

- Tie left-hand drive shaft up as high as possible.

On vehicles with 6 cylinder injection engine:

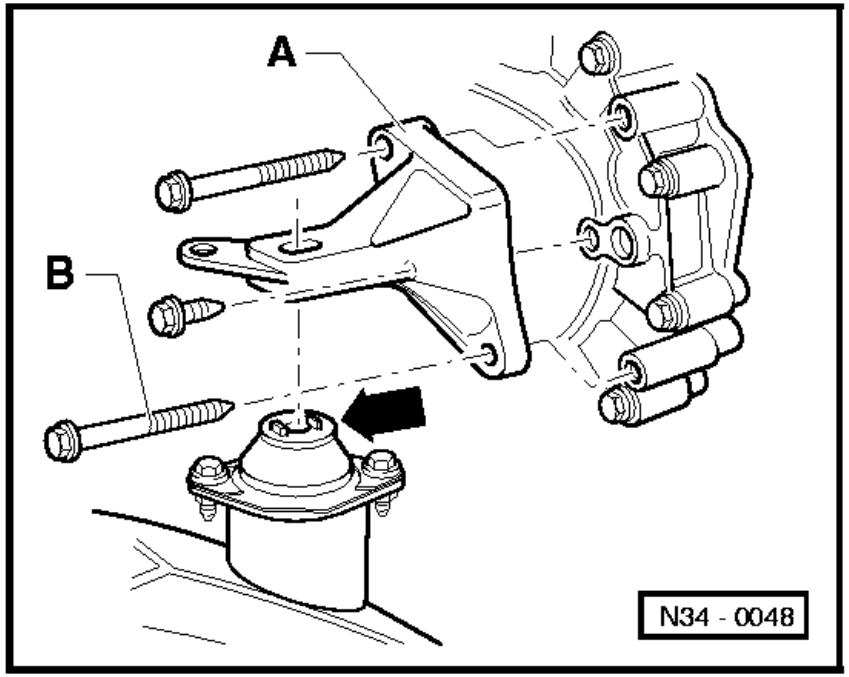

- Tie drive shafts up as high as possible.

- When doing this do not damage surface protection.

⇦ - Remove gearbox console -A- from gearbox.

- Push engine/gearbox assembly forwards (2nd mechanic required) and remove lower gearbox console securing bolt -B-.

Note:

Do not damage P.A.S. pipe when moving engine/gearbox assembly.

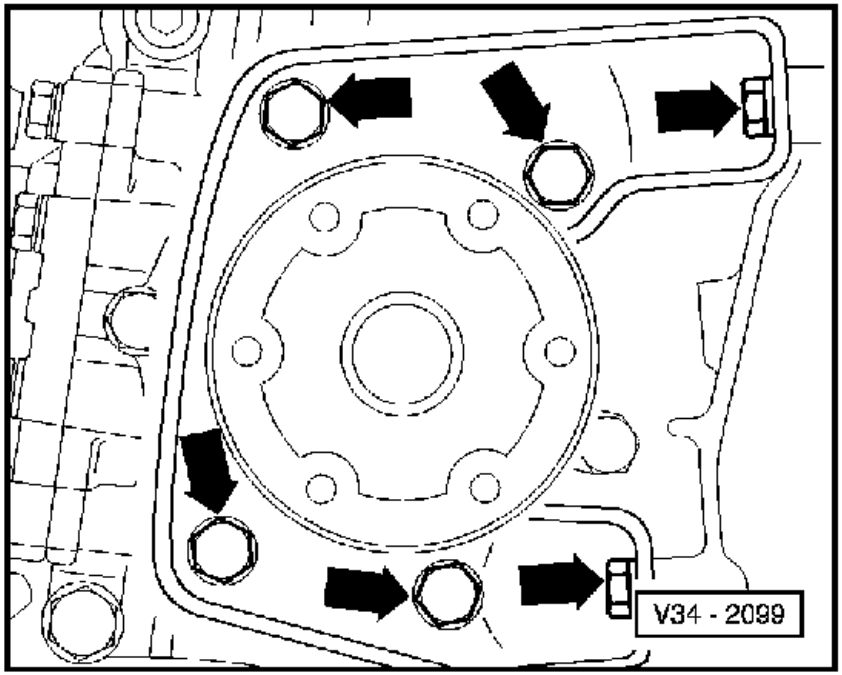

On vehicles with 4 cylinder engine:

⇦ - Remove bevel box mounting plate from engine and bevel box (arrows).

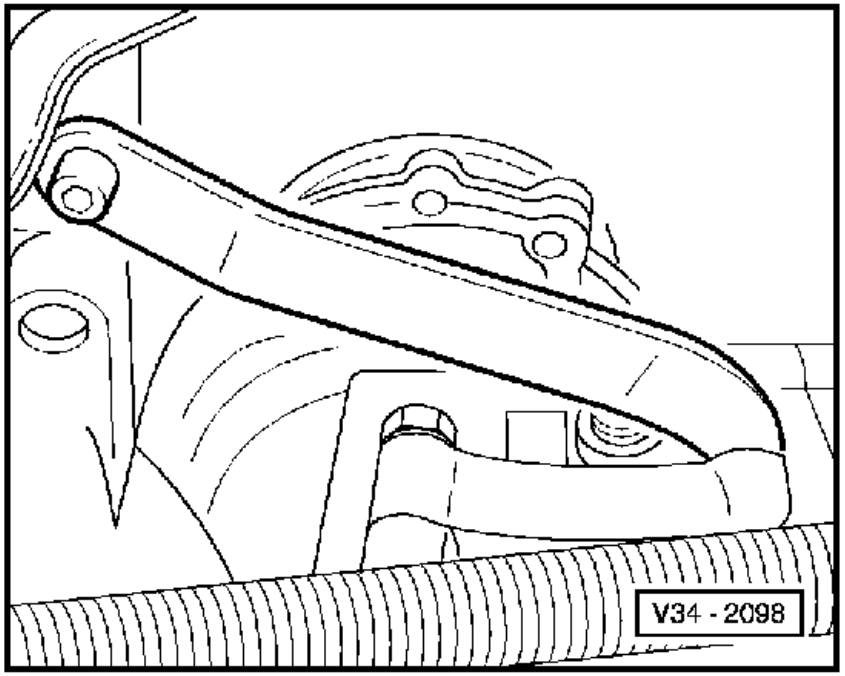

⇦ - Remove bevel box/engine support.

- Place drip tray underneath.

- Lever out drive flange sealing cap with a screwdriver.

- Remove drive flange counter sunk head bolt with V.A.G 1669 or 6 mm socket insert cone (commercially available) and counter hold against turning with a drift.

- Pull drive shaft with drive flange out carefully and note spring behind drive flange.

- Remove ribbed V-belt cover from body, front right.

- Push engine/gearbox assembly as far as possible to the right.
  Thereby ensuring sufficient clearance between P.A.S. pipes and drive unit.

Removal position:
Power unit crankshaft belt pulley lies almost against right-hand longitudinal member.

- Remove bevel box/gearbox securing bolts.

- Press bevel box off gearbox.

- Take bevel box out downwards between assembly carrier and sump, to do this push engine/gearbox assembly forwards (2nd mechanic).

Notes:

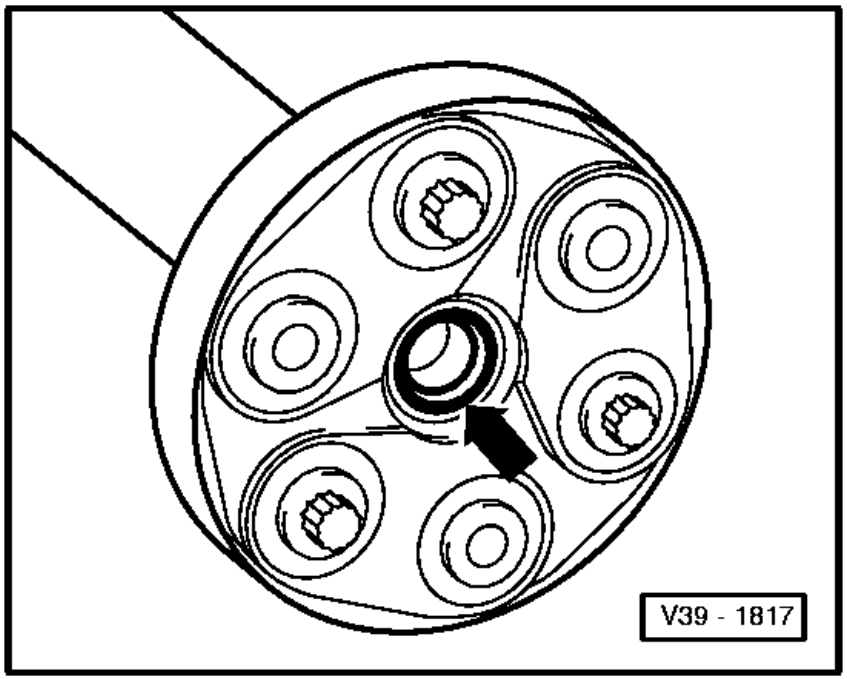

⇦ ◆ When removing and installing the bevel box do not damage the seal (arrow) in the propshaft flange.

◆ Do not damage P.A.S. pipe when lowering gearbox.

◆ If the vehicle is to be moved with the propshaft detached then secure the propshaft to prevent damage.

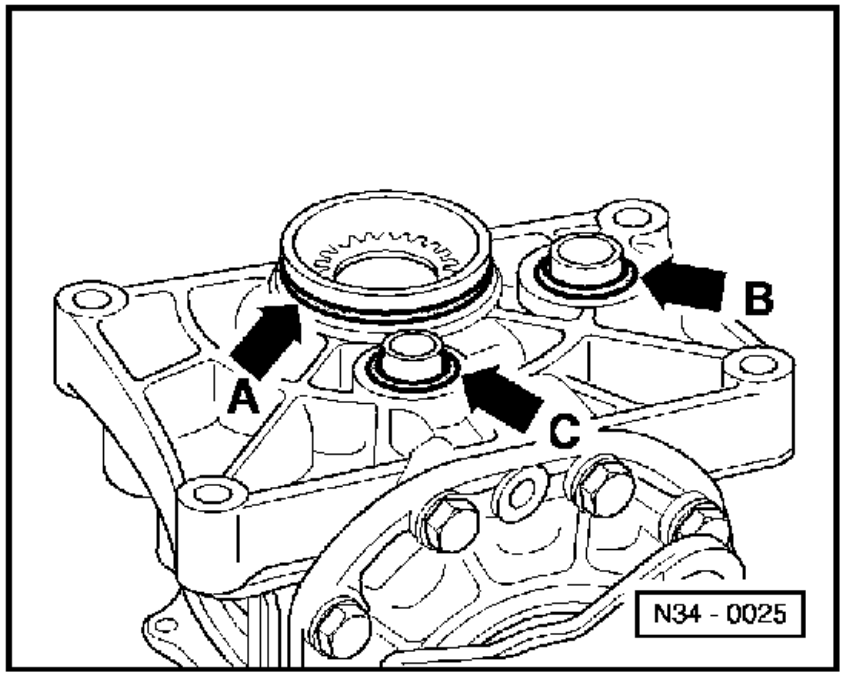

Installing gearbox is carried out in the reverse sequence. When installing gearbox ensure engine/gearbox mountings are installed stress-free.

=> Repair group 10; removing and installing engine.=>

Notes:

◆ Build bevel box on as follows:

⇦ - Always replace sealing ring to seal bevel box/gearbox (arrow A) and sealing rings to seals sleeves for the oil supply system (arrow B and C), lightly coat with oil.

- Push bevel box completely onto gearbox, thereby ensuring that the bevel box input shaft teeth are guided centrally onto the differential connecting piece.

- If the teeth position and the central guide are correctly set then the bevel box will slide onto the stop against the gearbox.

- Do not pull the bevel box onto the gearbox using securing bolts otherwise the bevel box will cant and the securing eyes can break off.

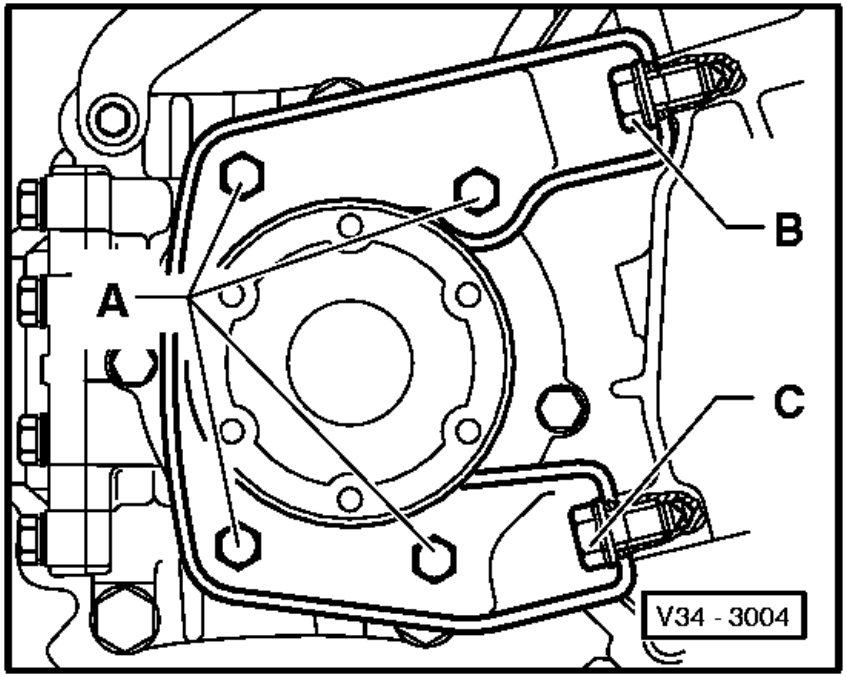

◆ When installing the gearbox carrier note following assembly sequence:

⇦ **On vehicles with 4 cylinder engine:**

- Tighten all bolts hand-tight.

- Tighten bolts -A- to 25 Nm.

- Tighten bolts -B- and -C- to 40 Nm.

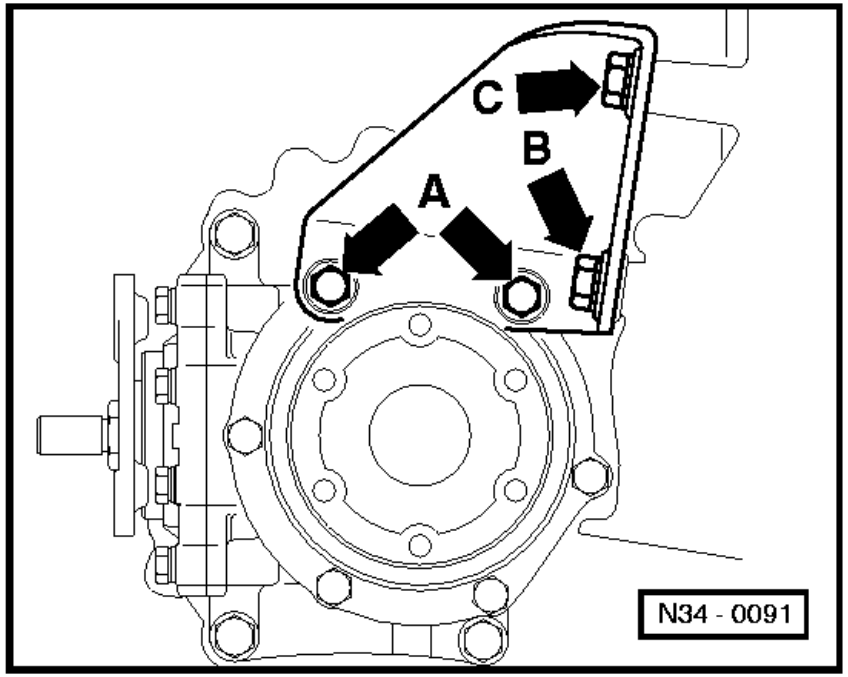

⇦ **On vehicles with 6 cylinder injection engine:** ---

- Tighten all bolts hand-tight.

- Tighten bolts -A- to 25 Nm.

- Tighten bolts -B- and -C- to 40 Nm.

◆ When removing and installing do not damage seals in propshaft flanges.

◆ Renew propshaft if damaged.

◆ Ensure propshaft is horizontal when pushing onto guide pins.

◆ Replacing drive shaft seal.

=> Running gear; Repair group 40; Servicing drive shaft=>

◆ Installing front exhaust pipe to catalyst

=> Repair group 26; Removing and installing parts of exhaust system.=>

◆ Checking oil in gearbox with bevel box =>Page 34-79.

◆ Adjust gear change linkage => Page 34-19.

Tightening torques

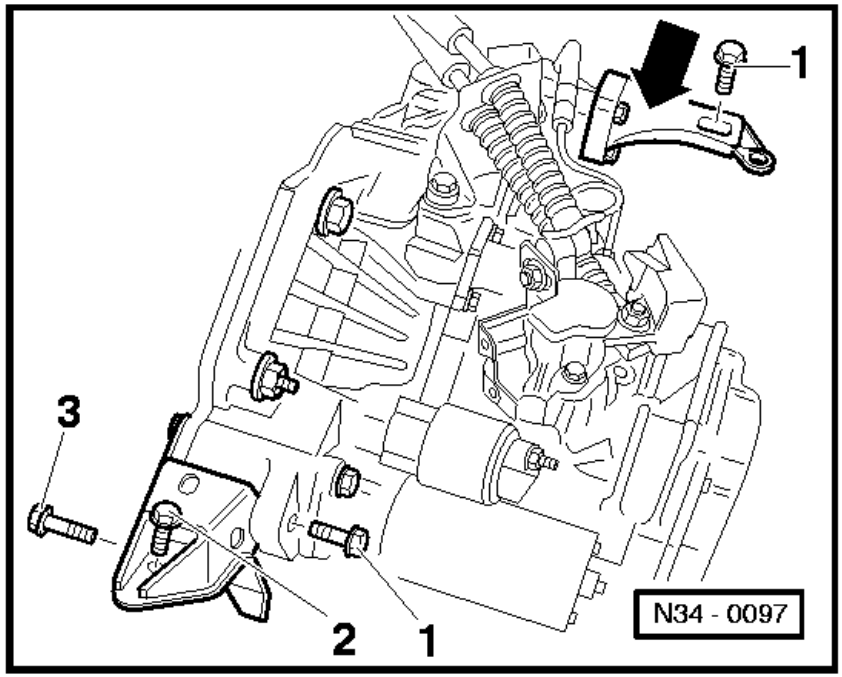

⇦ Assembly mountings

Pos.	**Bolt**	**Qty.**	Nm
1	M 10 x 45	2	55
2	M 10 x 30	1	55
3 1)	M 12 x 62	1	80

1)only vehicles with 6-Cyl. injection engine

Left gearbox console to gearbox (arrow)	25 Nm
Right-hand engine console to bonded rubber mounting	50 Nm

Further tightening torques => from page 34-38or page 34-58.