Removing and installing gearbox and bevel box (Vehicles with 6 cylinder fuel injection engine)

Removing

- With the ignition switched off disconnect the battery earth strap.

Note:

For vehicles with coded radio obtain radio code.

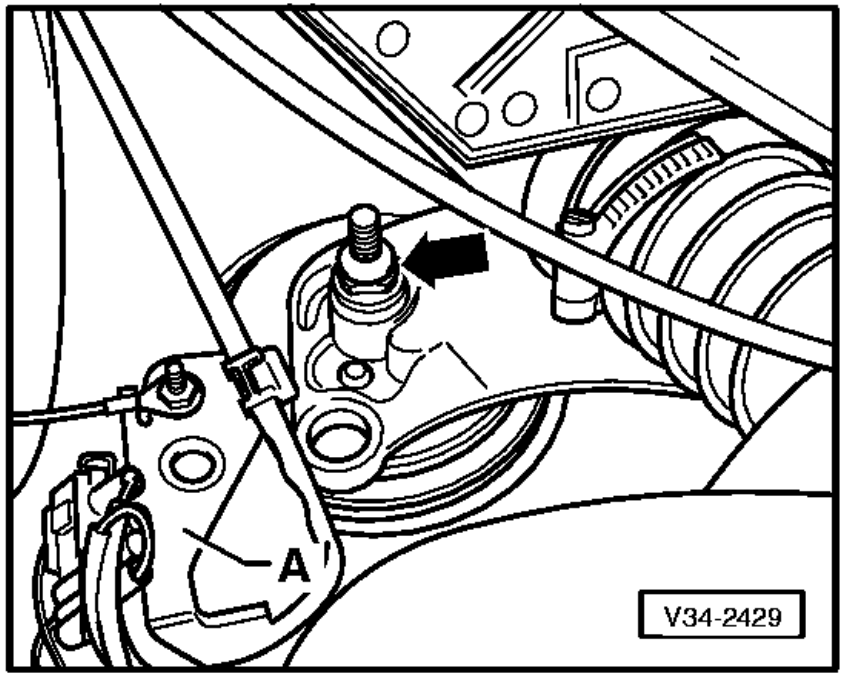

- Remove radiator cover.

- Disconnect suction hose and place to side.

⇦ - Remove bolt (arrow) on right-hand engine console. First remove connector mounting plate -A-.

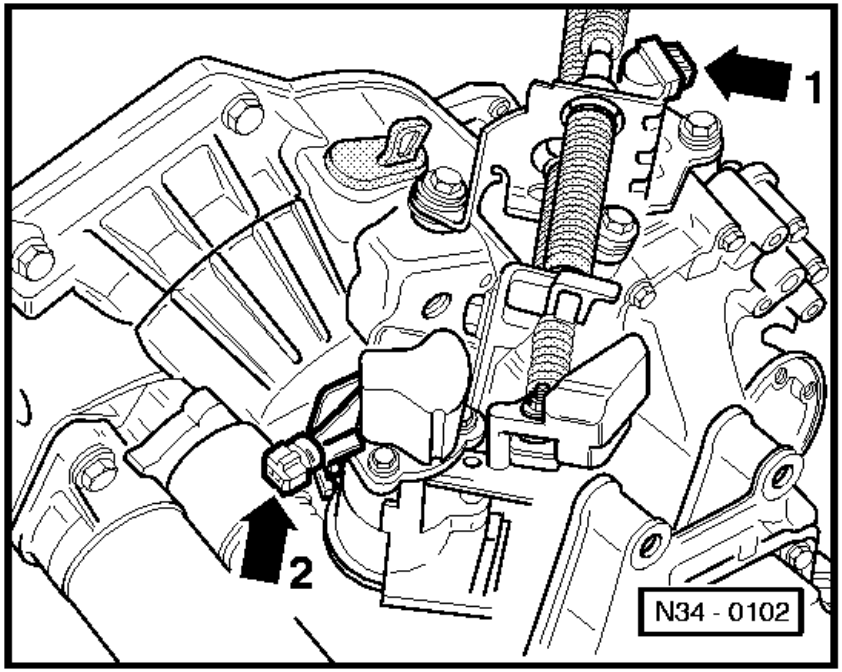

⇦ - Pull connector off speedometer sender (arrow 1).

- Pull off reverse light connector (arrow 2). Disconnect all other electrical connections and earth wires from gearbox and from the engine/gearbox securing bolts.

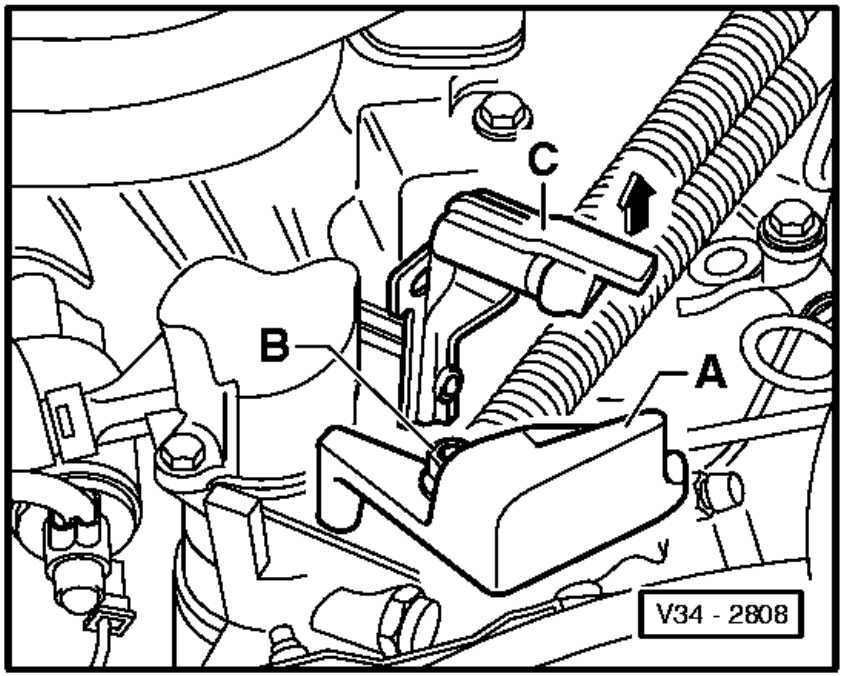

⇦ - Remove balance weight -A- and gear selector cable -B- from gear selector lever.

- Pull gate selector cable off actuating arm/relay lever -C- , to do this lift lug in direction of arrow.

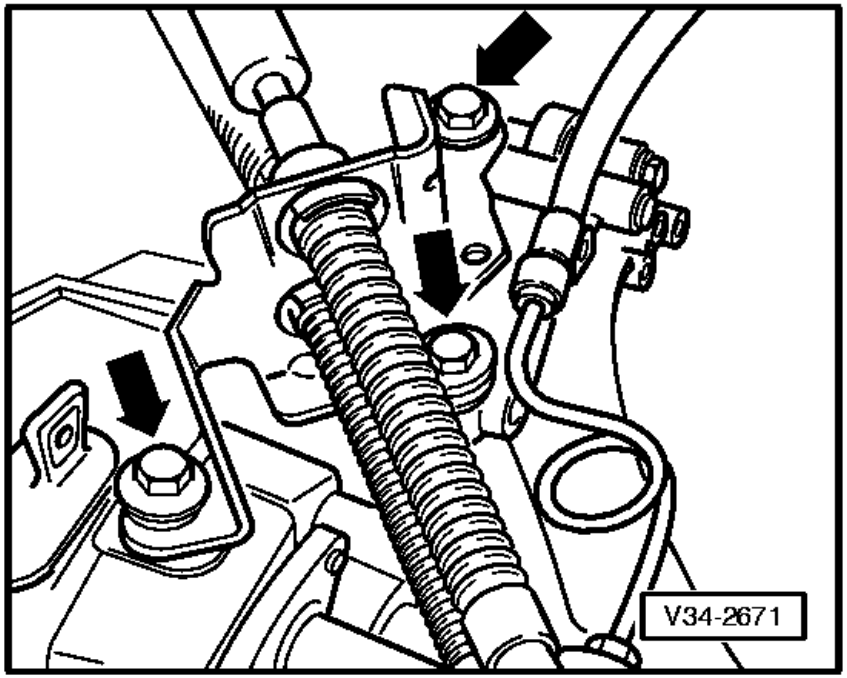

⇦ - Remove cable support bracket from gearbox (arrows) and tie up, first unclip hose on support bracket if necessary.

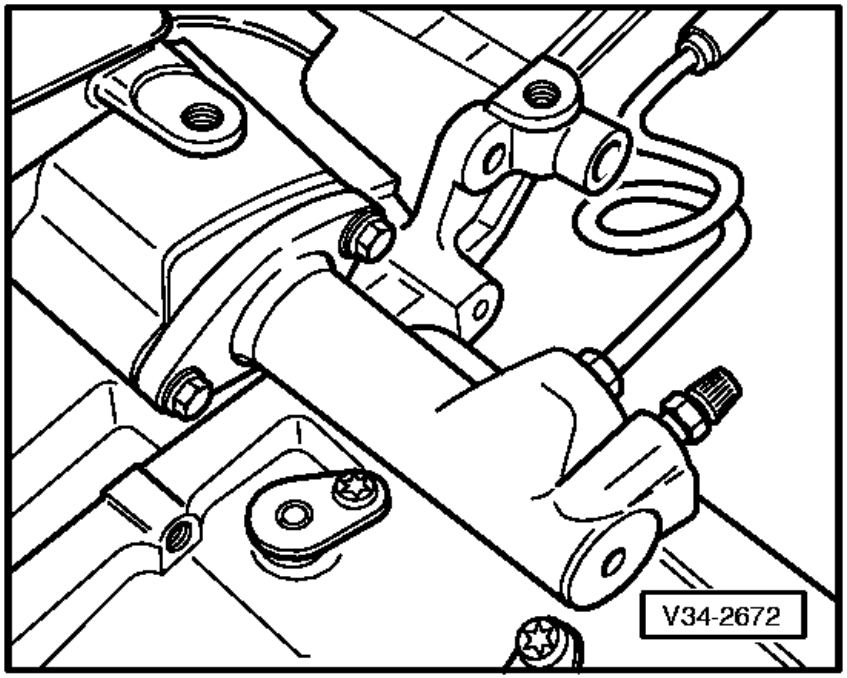

⇦ - Remove slave cylinder and secure to side with wire, do not disconnect pipe.
Note:

Do not depress clutch pedal.

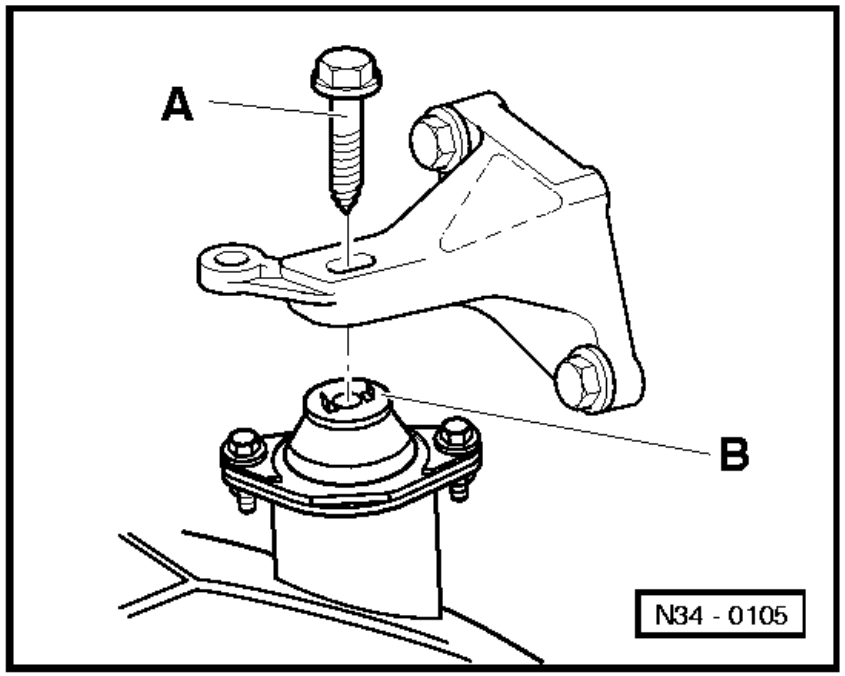

- Remove upper engine/gearbox securing bolts.

- Remove engine/gearbox securing bolt on right above bevel box.

- Remove coolant system expansion reservoir and lay to one side. Do not open coolant system.

⇦ - Remove hexagon bolt -A- from left-hand gearbox assembly mounting -B-.

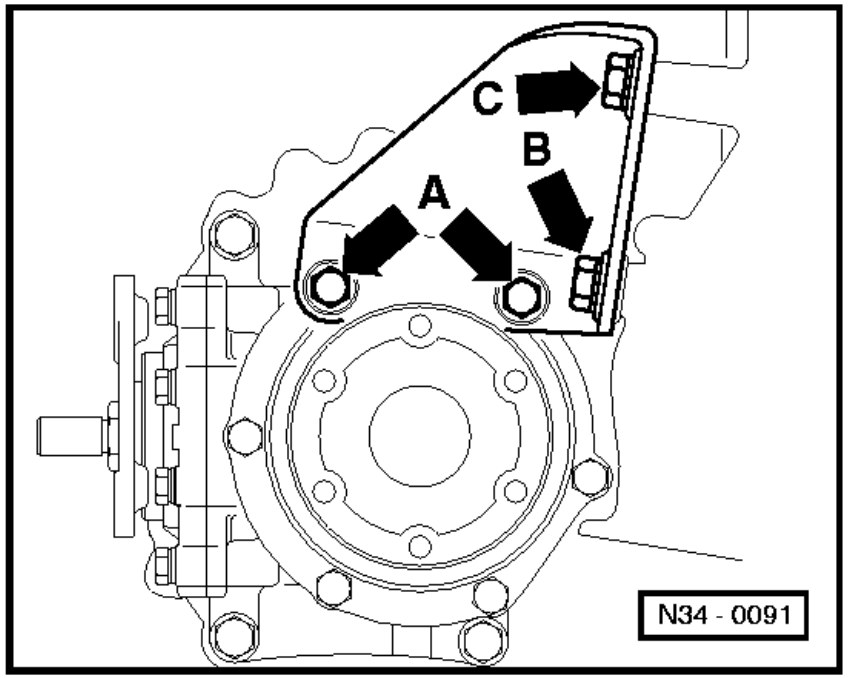

⇦ - Remove bevel box carrier from engine and bevel box (arrows) -A-, -B- and -C-.

- If fitted remove electrical connector securing plate from front console.

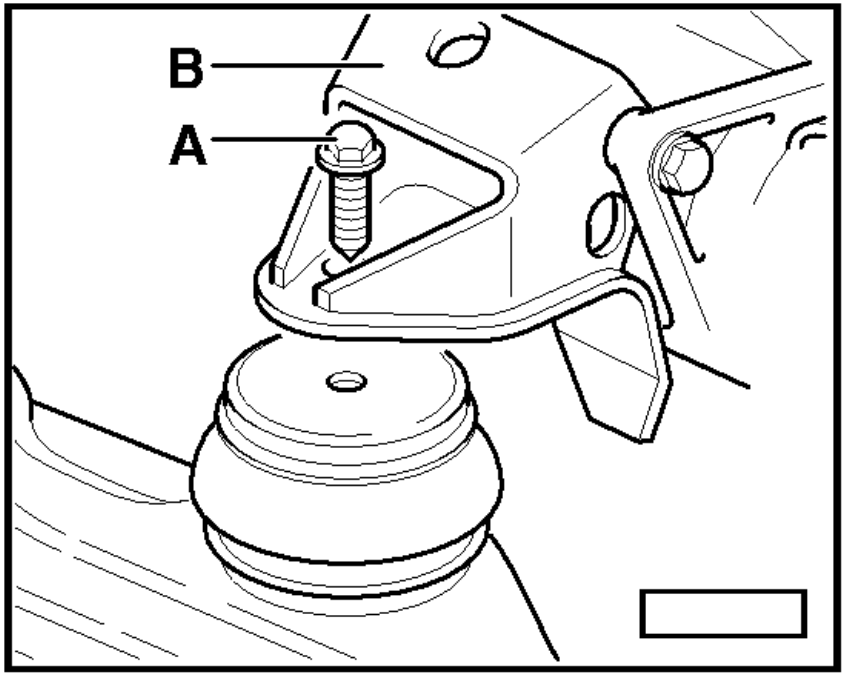

⇦ - Remove bolt -A- for console -B-.

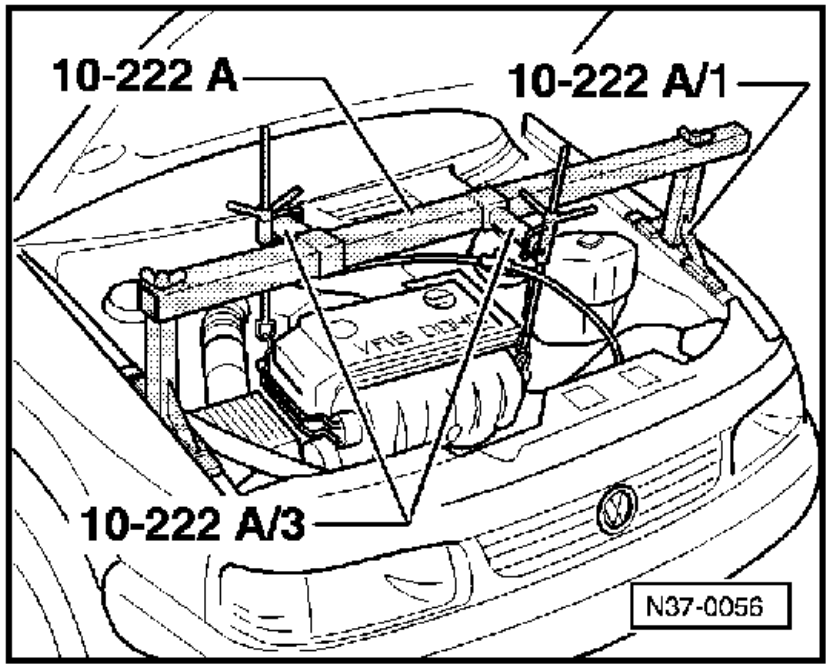

⇦ - Fit support bar 10-222A in conjunction with adapter 10-222 A/3 and legs 10-222 A/1.
Note:

Before fitting the support hooks of the support bar, remove hose and wire connections from engine in the area of the lifting eyes, so that they are not damaged.

- Take weight of engine/gearbox assembly on the spindles.

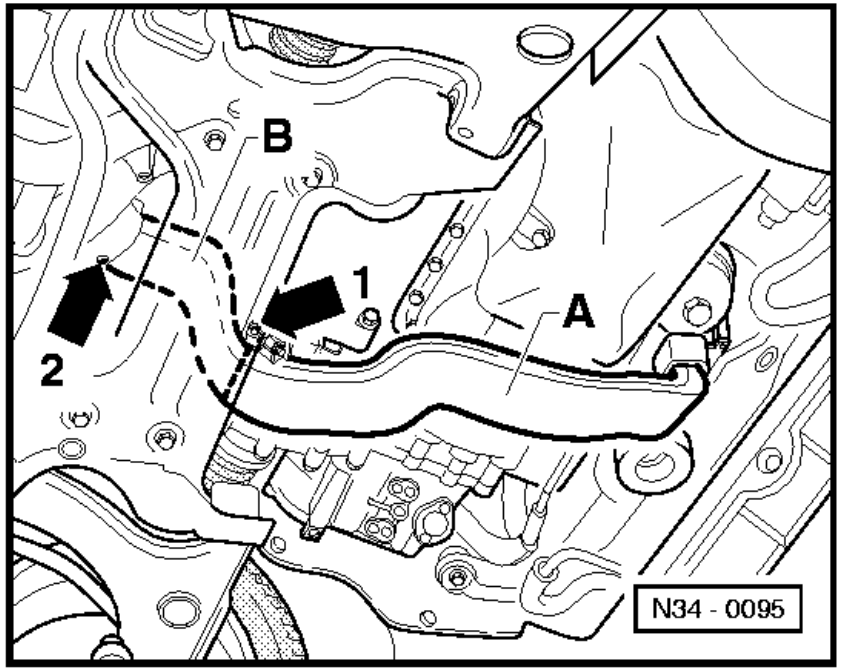

⇦ - Remove air duct -A- for cooling the propshaft bearing (arrow 1) and pull off front fan connection.

- Remove manifold -B- (arrow 2) and push to side.

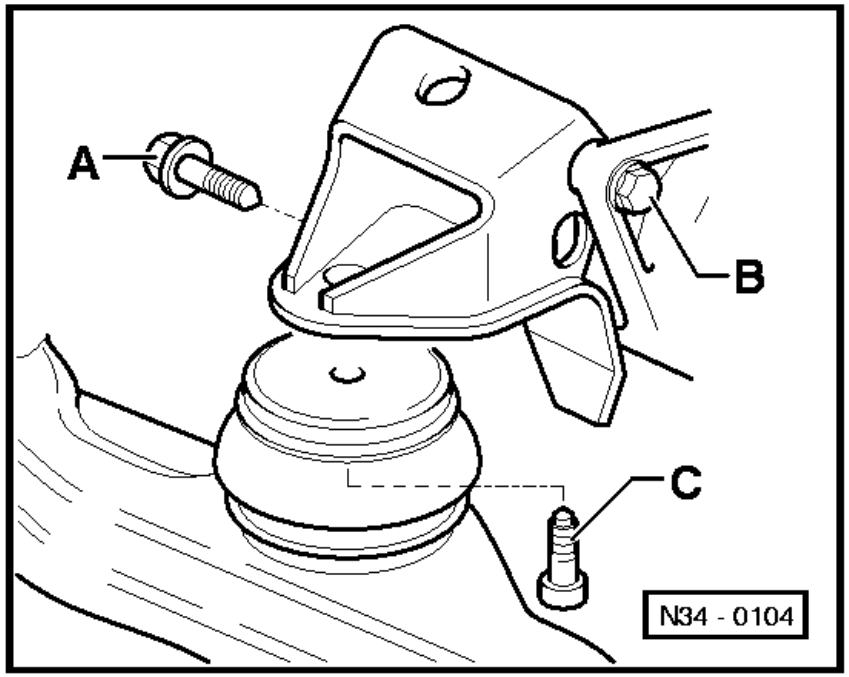

- Remove power assisted steering pipe bracket from gearbox.

- Remove starter.
=> Repair group 27; Removing and installing starter.=>

⇦ - Remove front console (bolts -A- and -B-).

- Remove front engine mounting (bolt -C-).

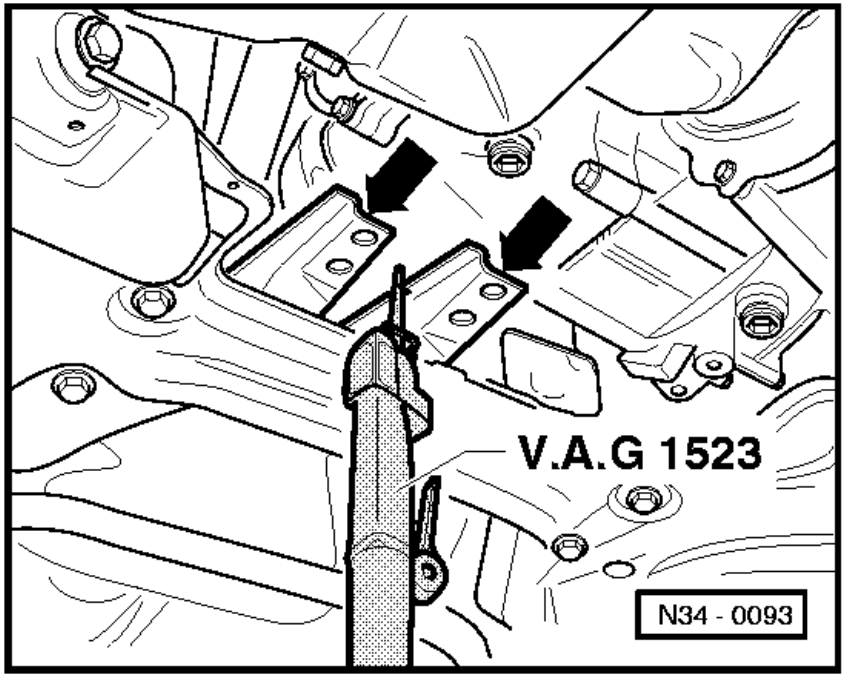

⇦ - Cut balance weight mounting (arrows) on assembly carrier off flush using body saw V.A.G 1523. Do not damage assembly carrier.

Warning!
Always wear protective glasses.

- If necessary repair paint work damage as follows:
  Remove grease remains with Nitro thinners L 001 600.
  Apply 2 component acrylic paint (ALN 769 041 with hardener ALZ 009 001).

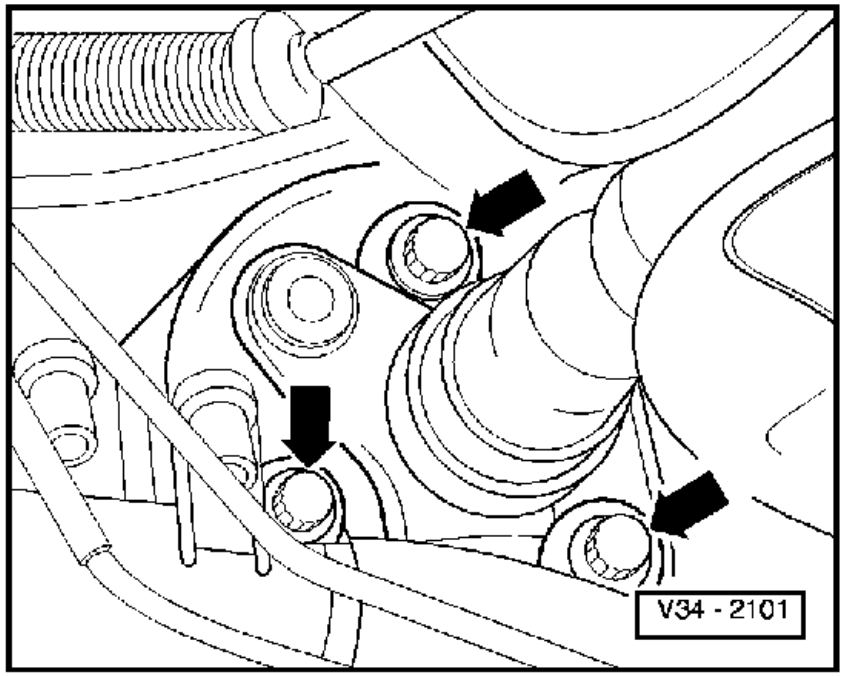

- Separate exhaust system behind front exhaust pipe.
  => Repair group 26; Removing and installing parts of exhaust system, four wheel drive.=>

- Remove heat shield above catalyst.

- Secure catalyst in lowered position.

- Mark position of propshaft with flexible coupling to bevel box flange.

⇦ - Disconnect propshaft flexible coupling from bevel box flange (arrows).

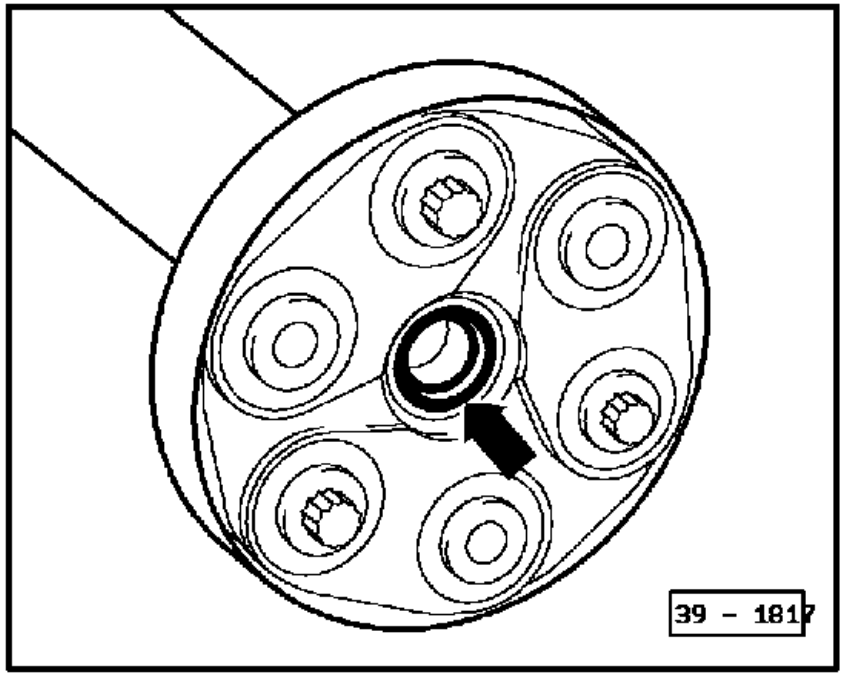

- Mark position of propshaft intermediate mounting to vehicle floor.

- Only loosen bolts on both intermediate mountings.

- Push propshaft back onto stop.

Note:

⇦ *When removing and installing the gearbox do not damage the sealing ring in the propshaft flange.*

- Disconnect drive shafts from gearbox.

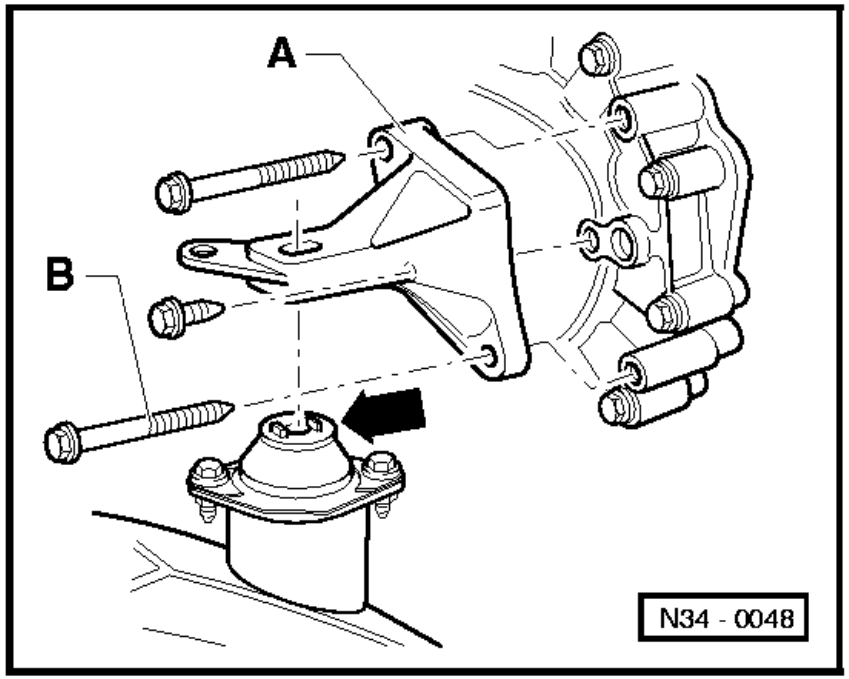

- Tie drive shaft up as high as possible, when doing this do not damage surface protection.

- Remove ribbed belt cover from body, front right.

⇦ - Remove gearbox console -A- from gearbox.

- Push engine/gearbox assembly forwards (2nd mechanic required) and remove lower gearbox console securing bolt -B-.

Note:

Do not damage P.A.S. pipe when moving engine/gearbox assembly.

- Remove air grille from front bumper.

⇦ - Remove bolts -A- for engine carrier/cross member.

- Unbolt bolts -B- approx. two turns and clamp an approx. 40 mm thick wooden plate on the vehicle left-hand side between engine carrier/cross member and longitudinal member from the rear.

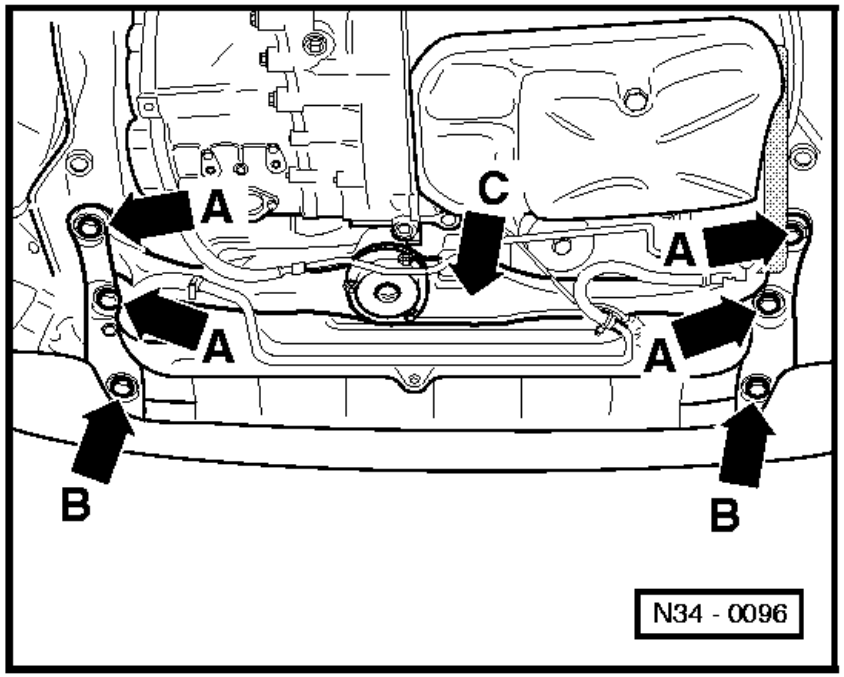

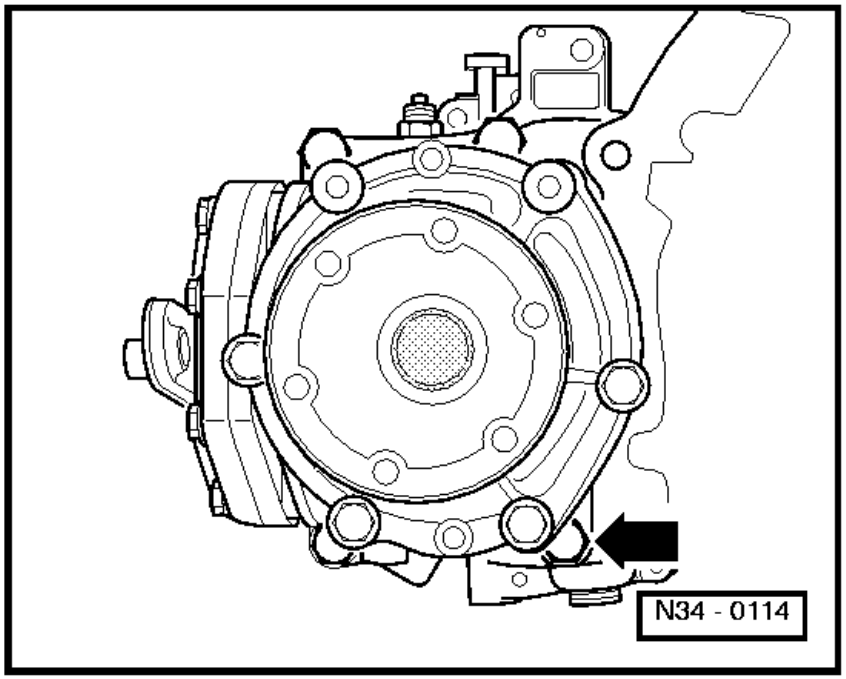

⇦ - To enable the hook of gearbox support 3282 to engage remove bolt (arrow) in bevel box.

- Remove flywheel cover plate.

- Lower drive unit with support device as far as possible to the left, until power unit crankshaft belt pulley lies almost against right-hand longitudinal member.

- Assemble gearbox jack V.A.G 1383A with gearbox support 3282, adjustment plate 3282/18 for "02C" gearbox and support elements as follows:

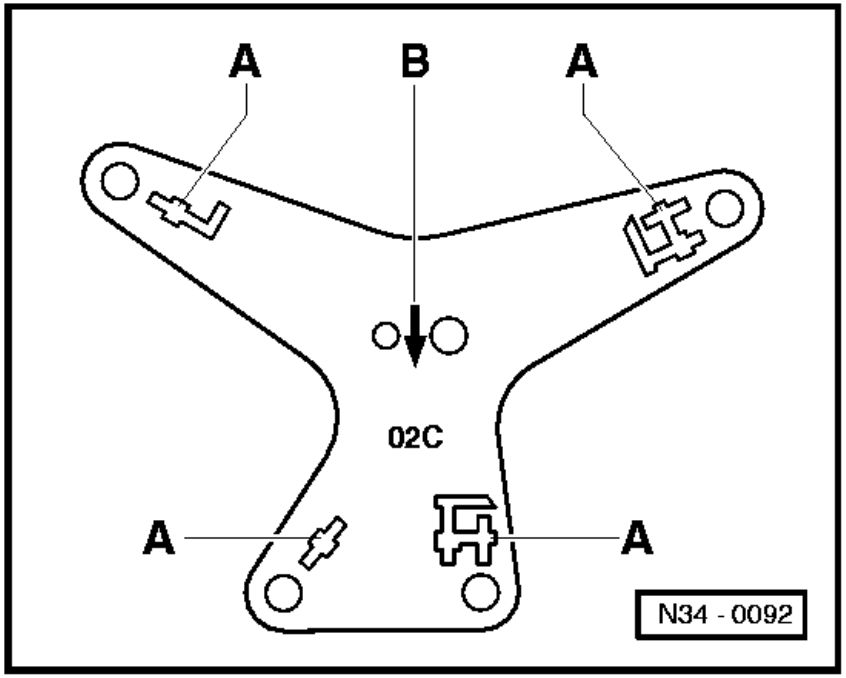

- Place adjustment plate 3282/18 on gearbox support 3282. (Adjustment plate only fits in one position).

- Align arms of gearbox support according to holes in adjustment plate.

⇦ - Bolt on support elements -A-, as illustrated on adjustment plate.

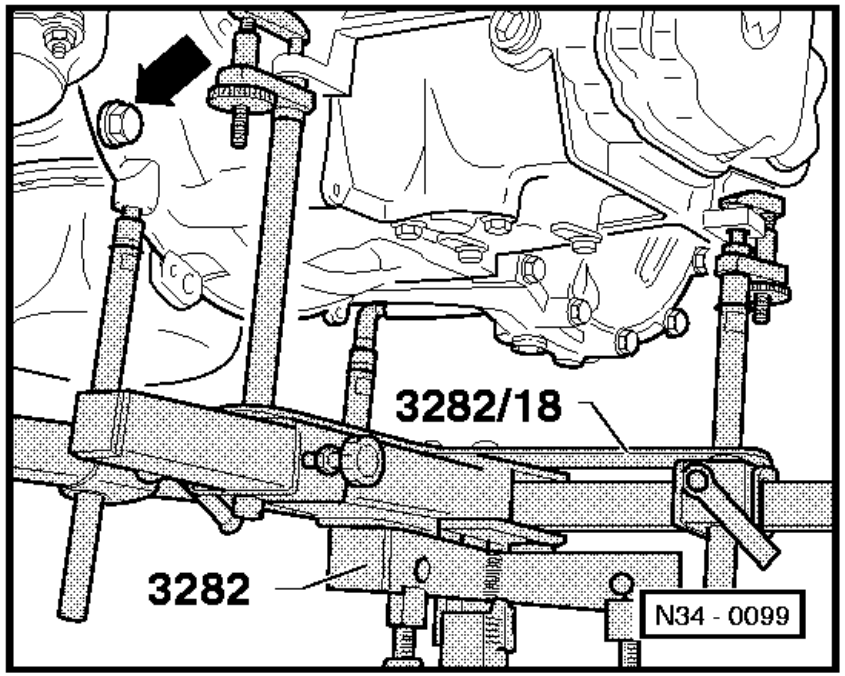

⇦ - Place gearbox jack under vehicle, arrow symbol -B- (=> Illustration N34-0092) on adjustment plate points to front of vehicle.

- Align adjustment plate parallel to gearbox and lock safety supports on gearbox.

- Remove lower engine/gearbox securing bolt (arrow).

- Press gearbox off engine.

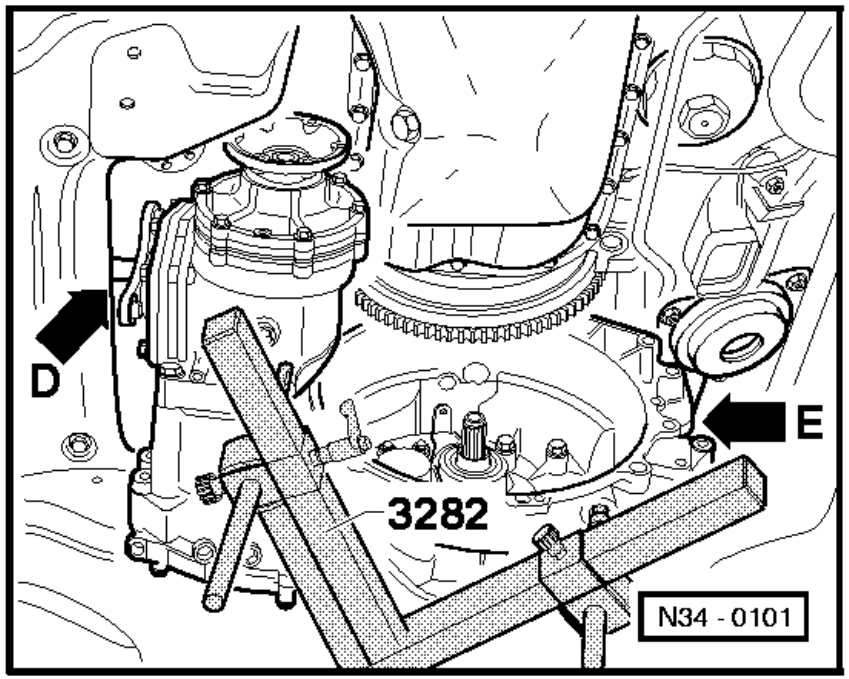

⇦ - Tilt gearbox forwards using the gearbox support spindles, noting restricted area -E- and carefully lower gearbox a small amount.

Notes:

◆ Do not damage P.A.S. steering pipes when lowering.

◆ The propshaft guide pins on the bevel box must not be damaged when removing and installing the gearbox (restriction -D-).

◆ For this fit a protective hose on the propshaft guide pins.

Alter the position of the gearbox via the spindles when lowering further as follows:

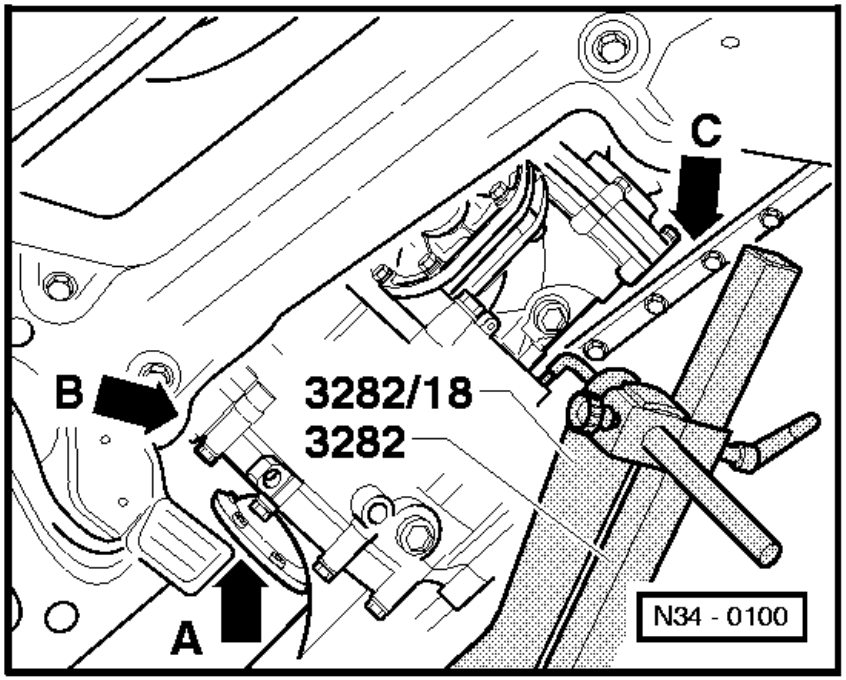

⇦ - Tilt gearbox further to the lower left and at the same time raise the front and guide past the restrictions -B- and -C- one after the other. When doing this ensure there is sufficient clearance for the left-hand flange shaft (restriction -A-).

Note:

Pay attention to securing points when gearbox is tilted to extremes on gearbox mounting.

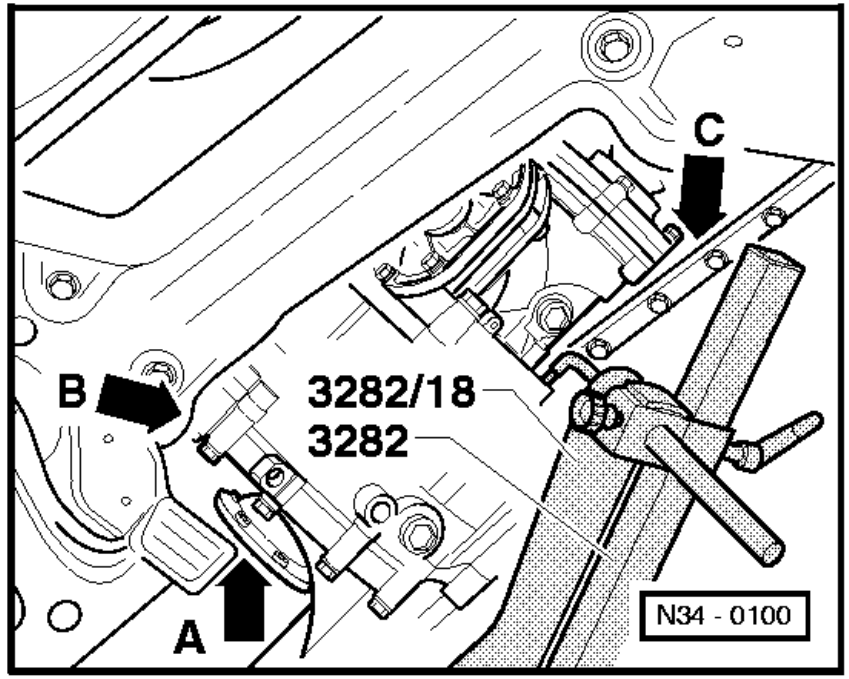

⇦ - Observe propshaft guide pin -D- (=> illustration N34-0101).

- Change angle of gearbox to point forward and down, in normal direction of travel, using the spindles.

- Lower gearbox left-hand flange shaft past assembly carrier in areas of arrows -A- and -B-.

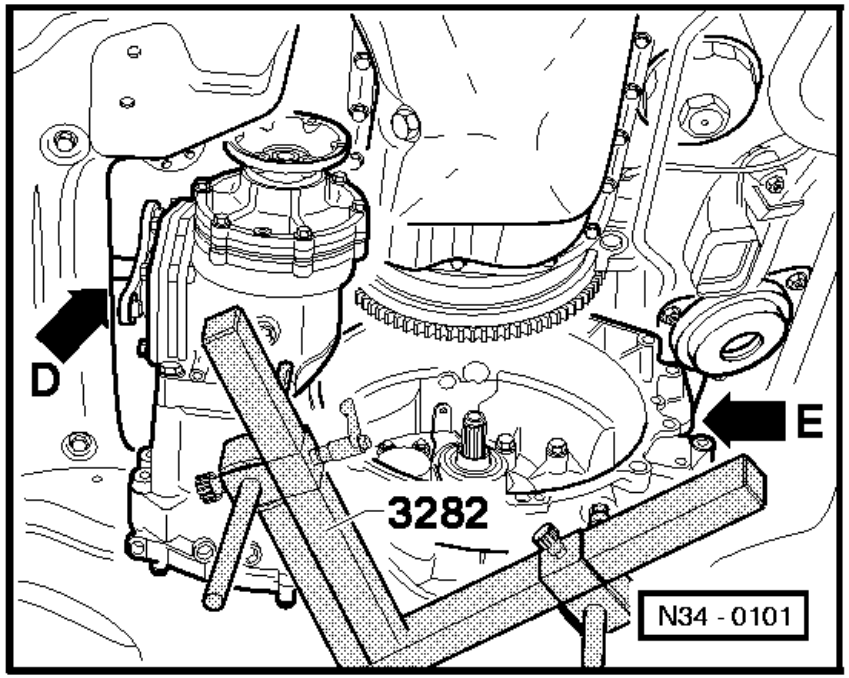

⇦ - Lower gearbox at restriction -E- using spindles.

- Guide propshaft guide pins around assembly carrier.

- Lower gearbox.

Notes:

◆ Do not damage P.A.S. pipes when lowering.

◆ If the vehicle is to be moved with the propshaft detached then secure the propshaft to prevent damage.

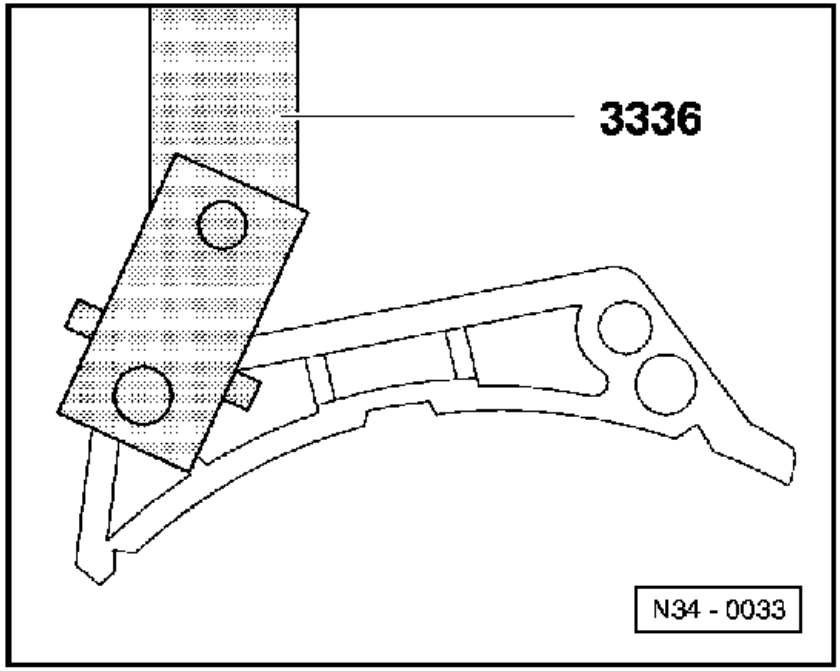

⇦ - Bolt gearbox lifting device 3336 to clutch housing.

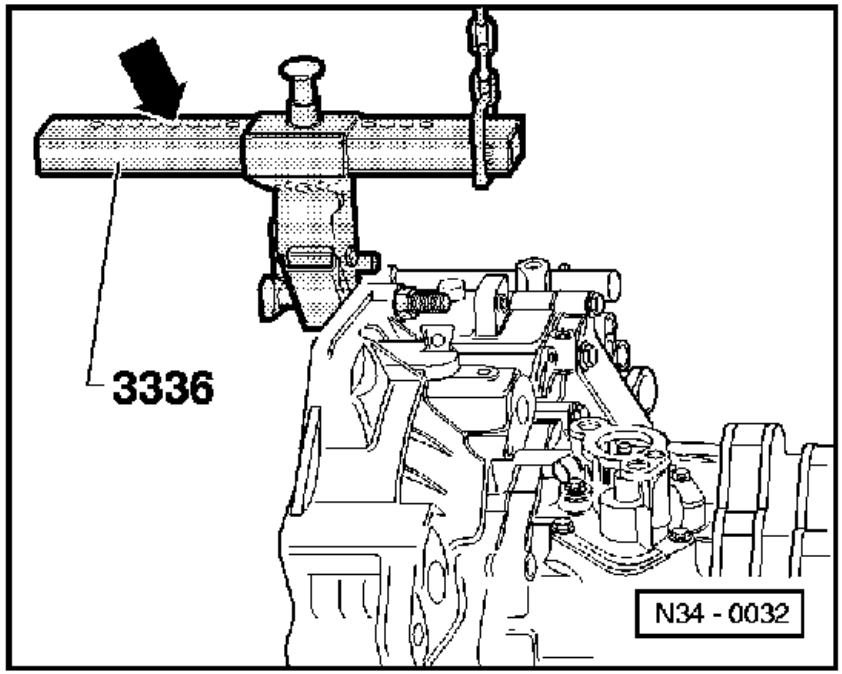

⇦ - Set support beam on sliding piece with locking pin (arrow).
No. of holes visible = 10

-

⇦ Take gearbox out with workshop crane and gearbox lifting device 3336.

- Reinstall lower right-hand bolt in bevel box/gearbox (=> Page 34-49, illustration 34-0114, arrow).

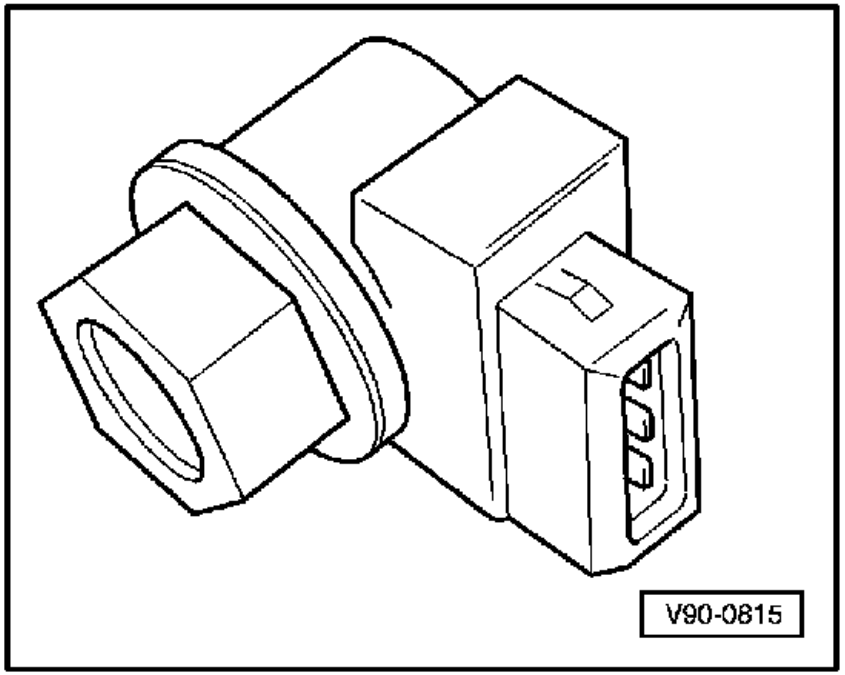

Installing

- Gearbox installation is carried out in the reverse sequence. When installing ensure engine/ gearbox mountings are installed stress-free.
=> Repair group 10; removing and installing engine.=>

Notes:

⇦ ◆ When replacing gearbox, the senders for speedometer (Fig.), gear selector lever and relay lever must be transferred to the new assembly.

◆ Clean input shaft splines and lightly grease with G000 100 grease.

◆ Check whether dowel sleeves for aligning engine/gearbox are fitted in cylinder block, install if necessary..

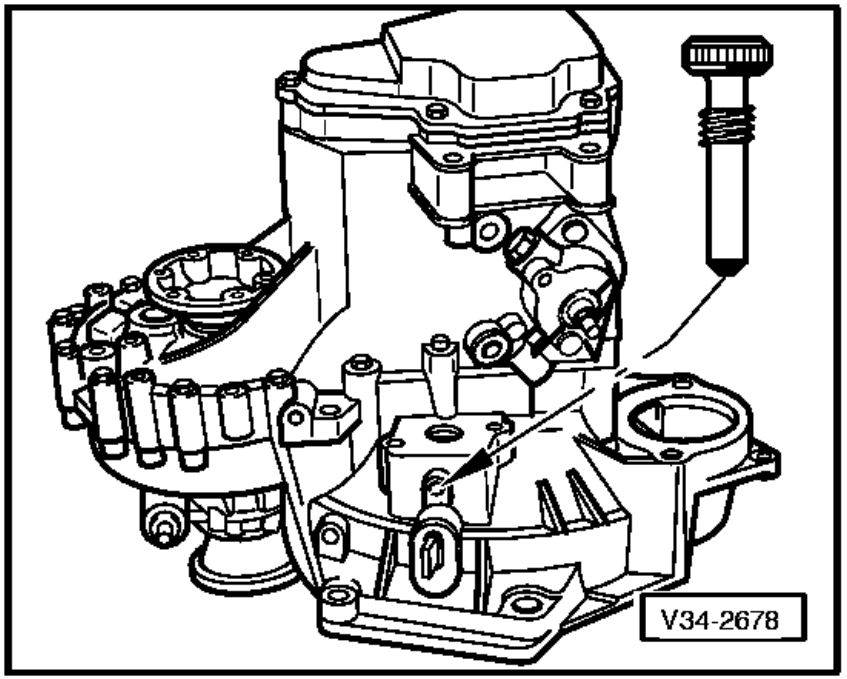

⇦ ◆ Before installing gearbox press clutch release lever towards gearbox housing and secure with assembly pin, assembly bolt or M 8 x 35 bolt. Remove after gearbox has been installed. The hole will then be sealed by the 3rd cable support bracket securing bolt or plugged.

◆ Before placing gearbox on gearbox support 3282 remove bolt from bevel box (=> Page 34-49, illustration N34-0114, arrow) to enable gearbox support hook to be fitted.

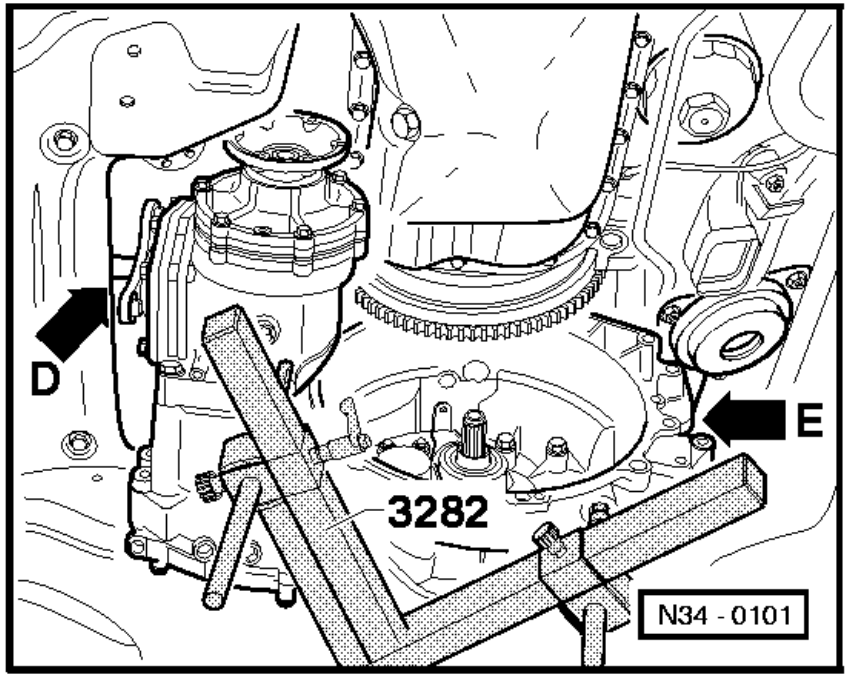

⇦ ◆ The gearbox is installed as follows:

- Tilt gearbox forwards and down, in normal direction of travel, using spindles on gearbox support. Thereby the bevel box will point upwards to the rear.

- Lift gearbox with gearbox jack slightly, observing restriction -E-.

- Lift gearbox further until the propshaft guide pins are above the edge of the assembly carrier (arrow -D-).

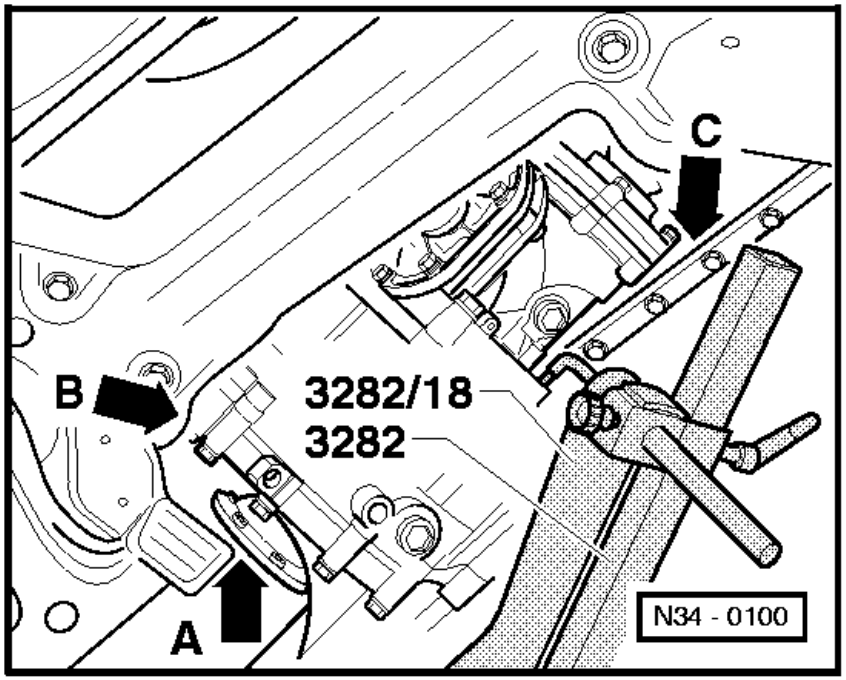

⇦ - Move gearbox bolted joint above edge of engine sump/assembly carrier at restrictions -B- and -C- thereby ensuring that left-hand flange shaft has sufficient clearance (restriction -A-).

- Lift gearbox at restriction -E- (=> illustration N34-0101) above engine carrier via spindles. Thereby observe coolant circuit hoses and P.A.S. pipes.

- Lift gearbox further and align parallel to engine.

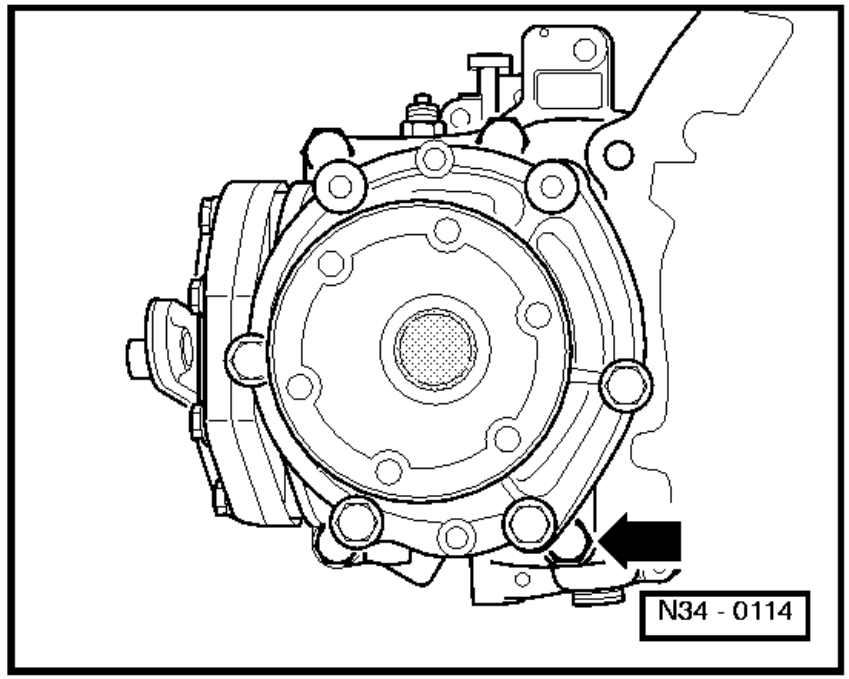

⇦ ◆ After removing gearbox support 3282 fit and tighten bevel box/gearbox lower right-hand securing bolt (arrow) to torque setting.

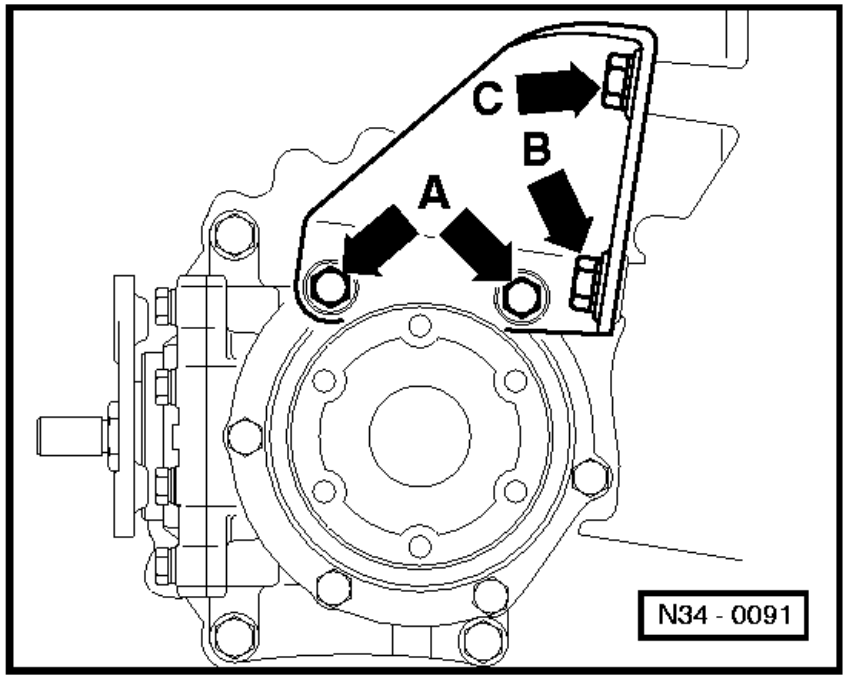

⇦ ◆ When installing the gearbox carrier the following assembly sequence is to be followed:
- Tighten all bolts hand-tight.
- Tighten bolts -A- to torque setting.
- Tighten bolts -B- and -C- to torque setting.

◆ When removing and installing do not damage seals in propshaft flanges.

◆ Renew propshaft if damaged.

◆ Push propshaft horizontally onto guide pins.

◆ Replacing drive shaft seal.
=> Running gear; Repair group 40; Servicing drive shaft=>

◆ Installing front exhaust pipe to catalyst

=> Repair group 26; Removing and installing parts of exhaust system.=>

◆ Installing starter/wiring.

=> Repair group 27; Removing and installing starter.=>

◆ Checking oil in gearbox with bevel box =>Page 34-79.

◆ Adjust gear change linkage => Page 34-19.

Tightening torques

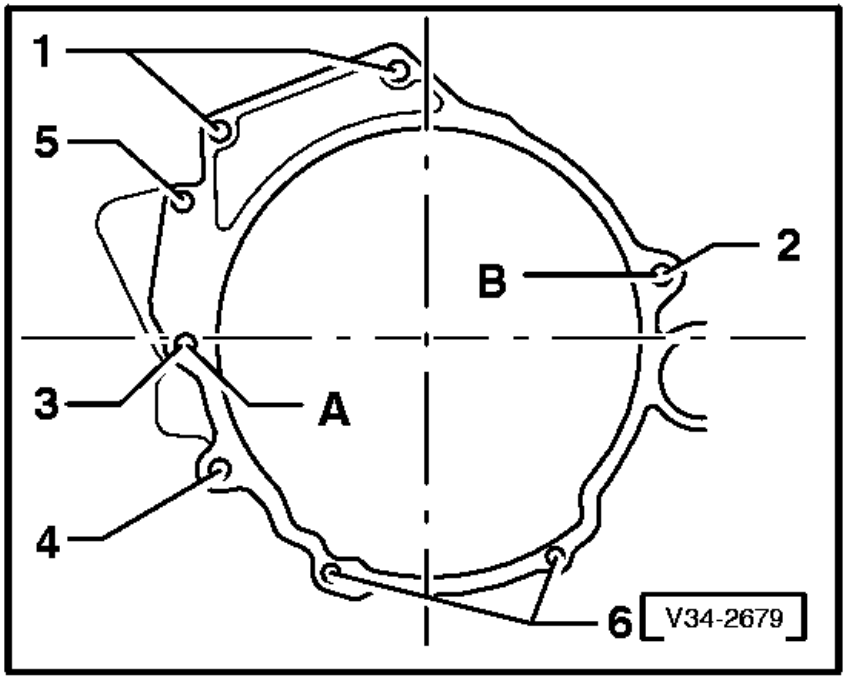

⇦ Gearbox to engine

Pos.	Bolt	Qty.	Nm
1	M 12 x 55	2	80
2	M 12 x 62	1	80
3[1])	M 12 x 62	1	80
4	M 12 x 46	1	80
5 [2])	M 10 x 160	1	60
6 [3])	M 7 x 12	2	10

[1])Also front console to gearbox

[2])Also starter and front console to gearbox

[3])Flywheel cover plate
Pos. A + B - Dowel sleeves
Lower starter to gearbox securing bolt M 10 x 42 60 Nm

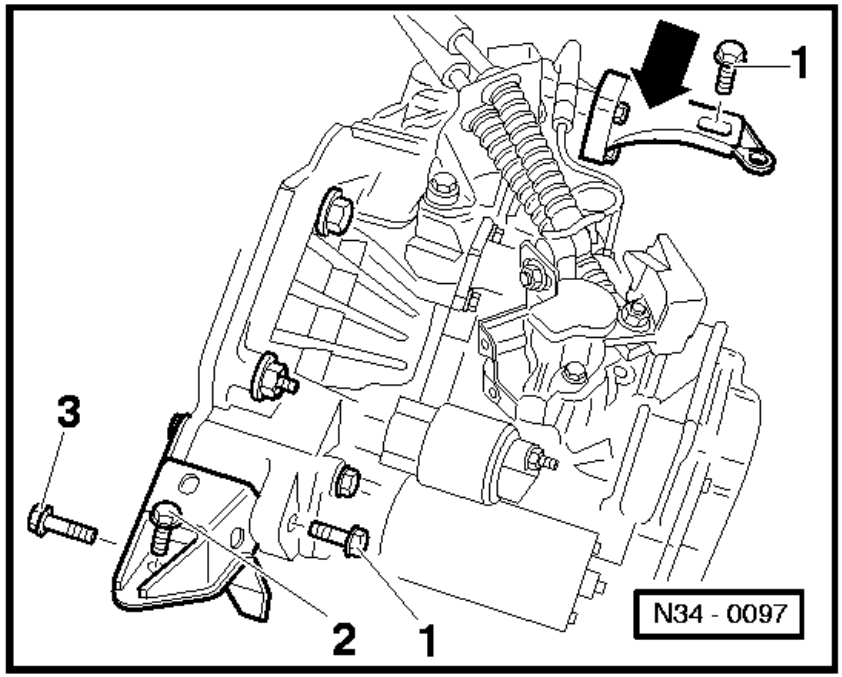

⇦ Assembly mountings

Pos.	Bolt	Qty.	Nm
1	M 10 x 45	2	55
2	M 10 x 30	1	55
3	M 12 x 62	1	80

Left gearbox console to gearbox (arrow)	25 Nm
Right-hand engine console to bonded rubber mounting	50 Nm
Front bonded rubber mounting to engine carrier (M10)	50 Nm

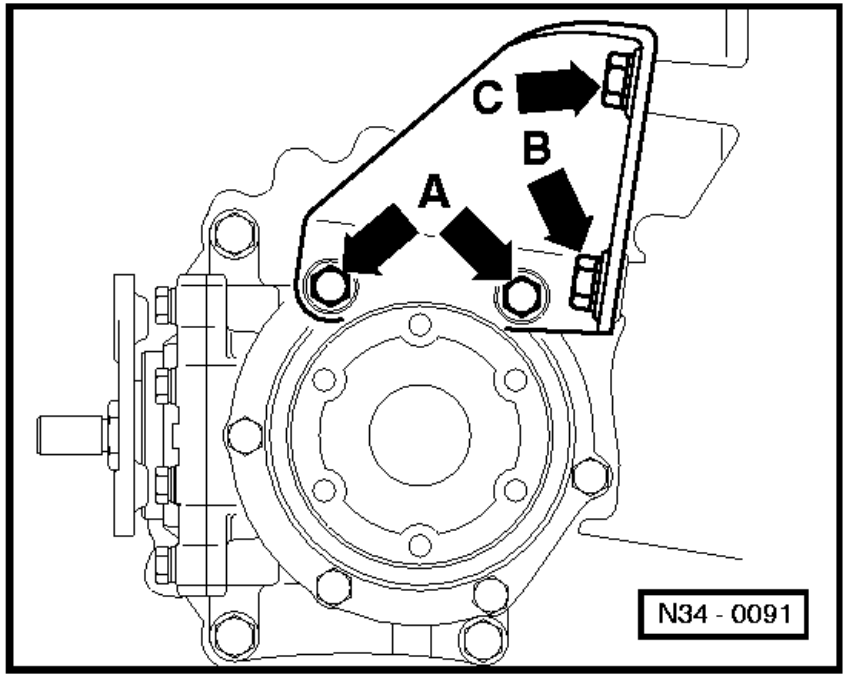

Bevel box to gearbox	40 Nm
Cross member/engine carrier to longitudinal member	80 Nm
Drive shaft to shaft flange/drive flange	45 Nm
Propshaft intermediate bearing to body	25 Nm
Flexible coupling to bevel box	45 Nm
⇦ Gearbox carrier to bevel box, bolts -A-	25 Nm
Gearbox carrier to engine, bolts -B- and -C-	40 Nm
Selector cable support bracket to gearbox	25 Nm
Selector cable bolt to gearbox selector lever	25 Nm
Balance weight to gearbox selector lever	25 Nm