Re-adjustment of the shaft bevel gear is required if

◆ Final drive housing

◆ Shaft bevel gear taper roller bearing

◆ Gear set

or the

◆ Pinion housing

are renewed.

Adjustment overview =>Page 39-54

**Determine shim "S4" thickness**

- Press shaft bevel gear large taper roller bearing outer race into pinion housing with press piece 2050.

- Press shaft bevel gear small taper roller bearing outer race into pinion housing with VW 473.

- Press large taper roller bearing inner race onto shaft bevel gear with tube VW 415 a.

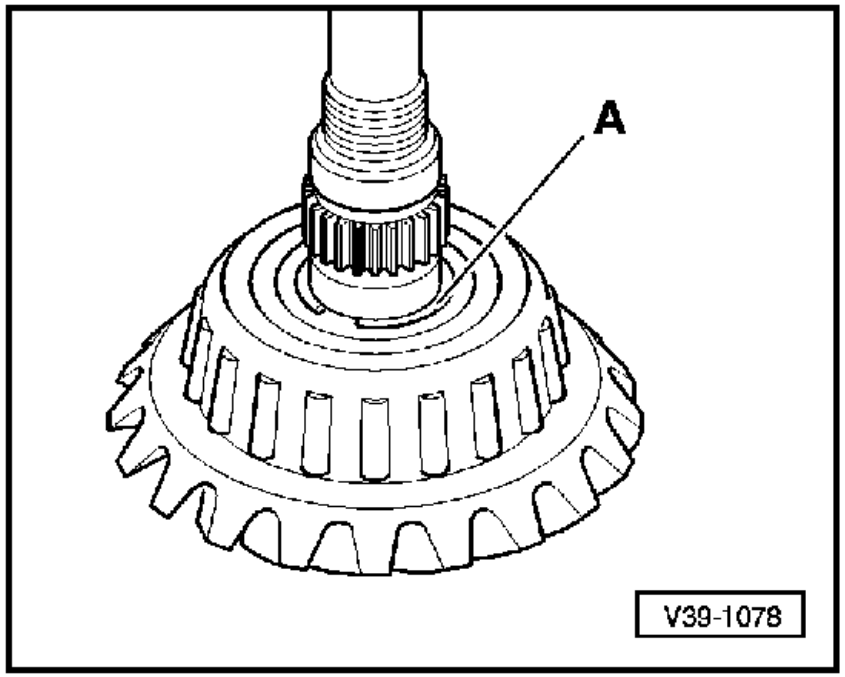


⇦ - A - Place on soldering wire of1.5 mm øinstead of shim S4.

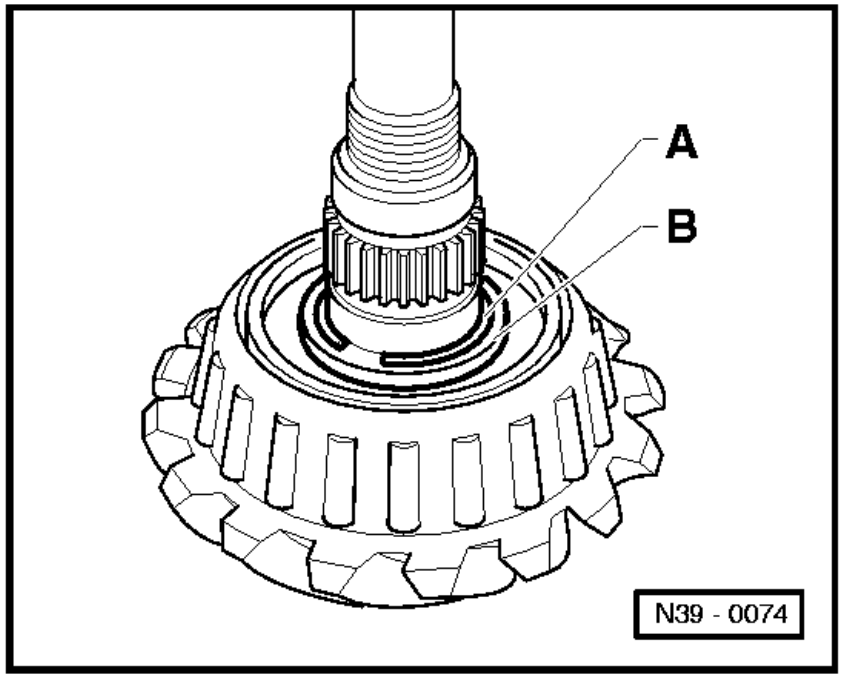


**Gearboxes for vehicles with 6 cylinder injection engine:**

⇦ - Before fitting soldering wire of 1.5 mm ø -A- fit spacer ring -B- with chamfer towards taper roller bearing inner race.

- Fit shaft bevel gear.

- Fit small taper roller bearing inner race and output flange and fit hexagon nut.

⇦ - A - Fit M 10 hexagon bolt to act as counter hold

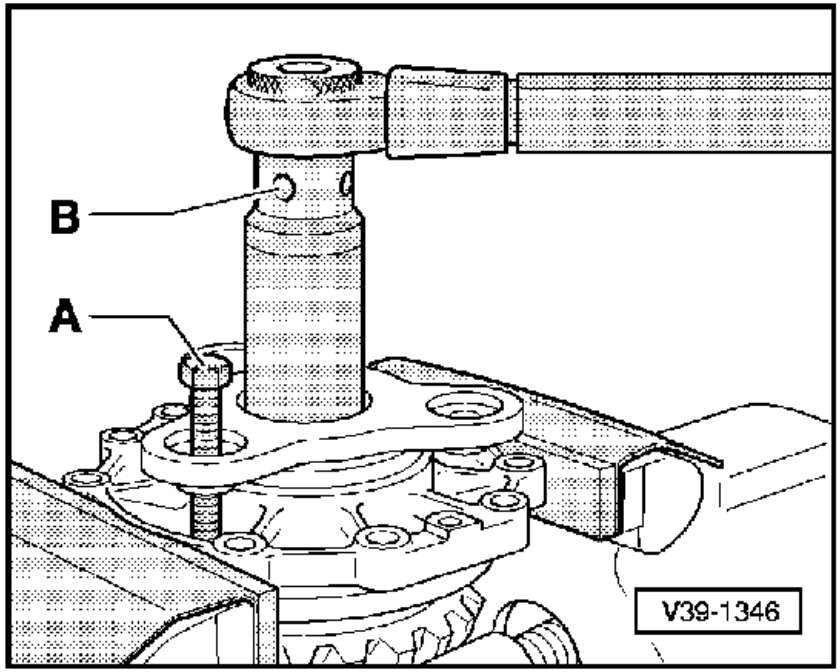


B - Socket

- Tighten hexagon nut to 20 Nm, loosen or completely remove hexagon bolt -A-.

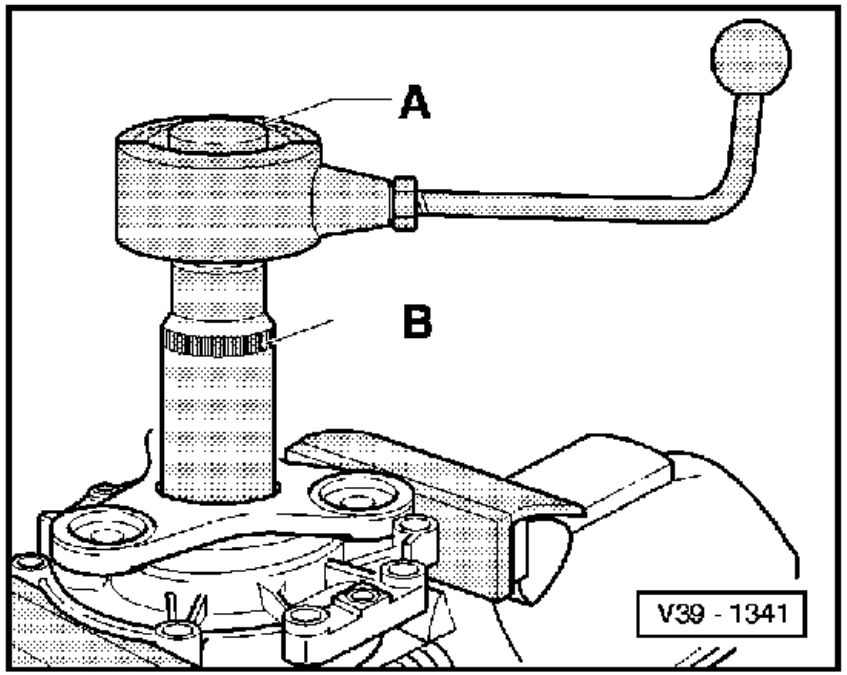


⇦ - Measure friction torque.
A - Commercially available torque gauge, 0...600 Ncm
B - Socket

- Increase torque setting if necessary to achieve the prescribed friction torque.
***Note:***

*Only increase tightening torque slowly thereby reading off friction torque regularly; if the prescribed friction torque is exceeded then the soldering wire must be renewed and the adjustment process repeated.*

**Following friction torques are to be set:**

| new bearings | used bearings[1]) |
|---|---|
| 200 ... 250 Ncm | 30 .... 50 Ncm |

[1]) run for at least 50 km (30 miles)

- Remove shaft bevel gear and carefully remove crushed soldering wire.

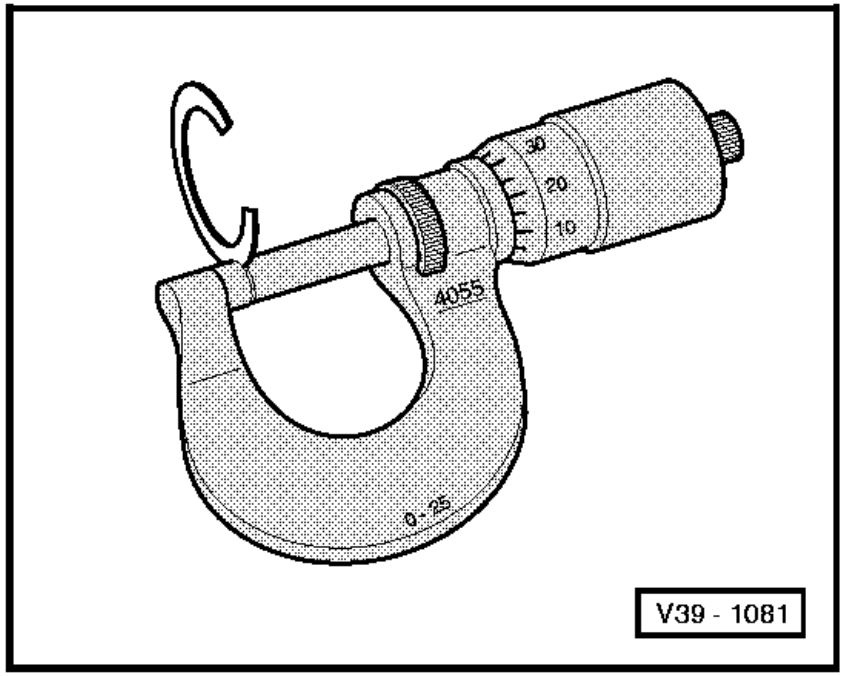


⇦ - Measure thickness of soldering wire at a well crushed together area where there is no lip.

- Select shim(s) of same thickness.
The following adjustment shims are available:

| Size (mm) | Part No. |
|---|---|
| 0.65 | 02C 409 280 |
| 0.70 | 02C 409 280A |
| 0.75 | 02C 409 280B |
| 0.80 | 02C 409 280C |
| 0.85 | 02C 409 280D |
| 0.90 | 02C 409 280E |
| 0.95 | 02C 409 280F |
| 1.00 | 02C 409 280G |
| 1.05 | 02C 409 280H |
| 1.10 | 02C 409 280J |
| 1.15 | 02C 409 280K |
| 1.20 | 02C 409 280L |
| 1.25 | 02C 409 280M |
| 1.30 | 02C 409 280N |
| 1.35 | 02C 409 280P |
| 1.40 | 02C 409 280Q |

- Fit shim S4 and install shaft bevel gear.

⇦ - Lubricate hexagon nut threads with gear oil, fit and tighten to 350 Nm.

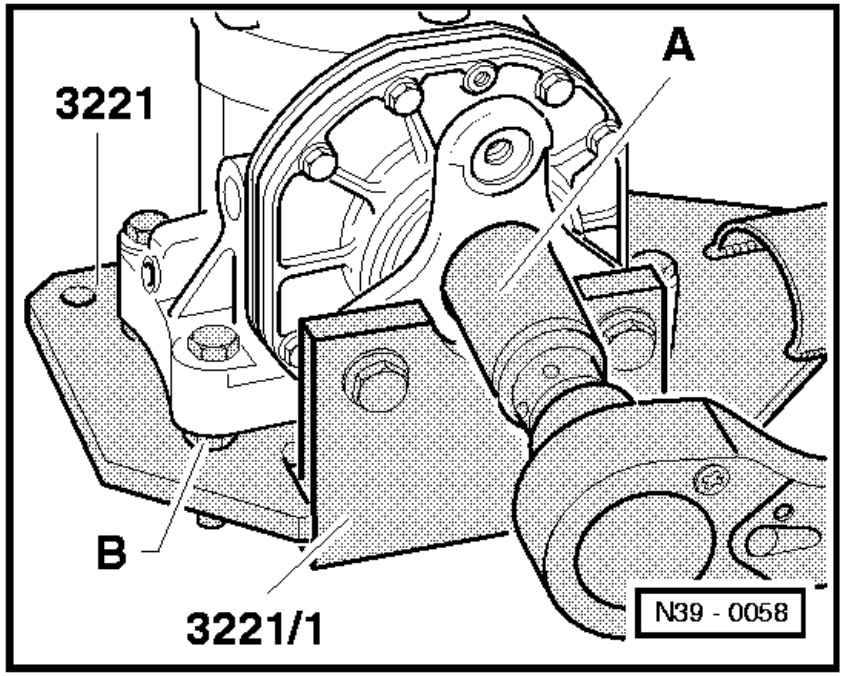


A - Socket for 3/4" drive

B - Nut M12 x 10

**Carry out control measurement - checking friction torque**

Friction torque =>Page 39-62

Correct if necessary with a thinner (more friction torque) or thicker (less friction torque) S4shim.

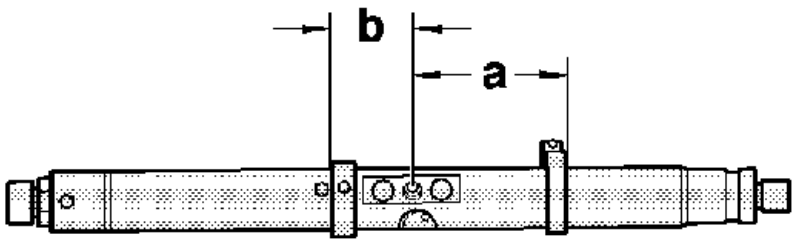


V39 - 1342

- Install pinion housing with shaft bevel gear and installed shim S4.

- Do not fit O-ring.

⇦ - Set universal mandrel VW 385/1 setting ring to dimension a = 75 mm.

- Set sliding positioning ring to dimension b = 32 mm.

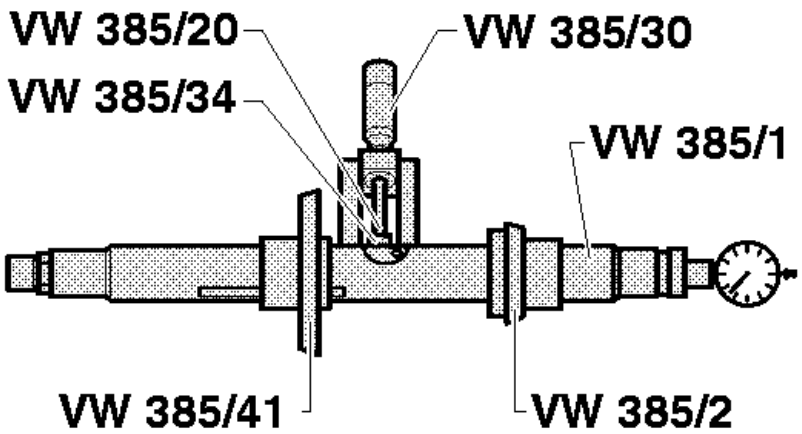


N39 - 0086

⇦ - Arrange universal mandrel as illustrated.
Measuring gauge extension VW 385/20 = 3 mm.
**Gearboxes for vehicles with 4 cylinder engine:**

*Set universal adjustment gauge VW 385/30 to*

*Ro = 36.20 mm.*

**Gearboxes for vehicles with 6 cylinder injection engine:**

*Set universal adjustment gauge VW 385/30 to*

*Ro = 35.20 mm.*

- Preload measuring gauge to 3 mm and zero.

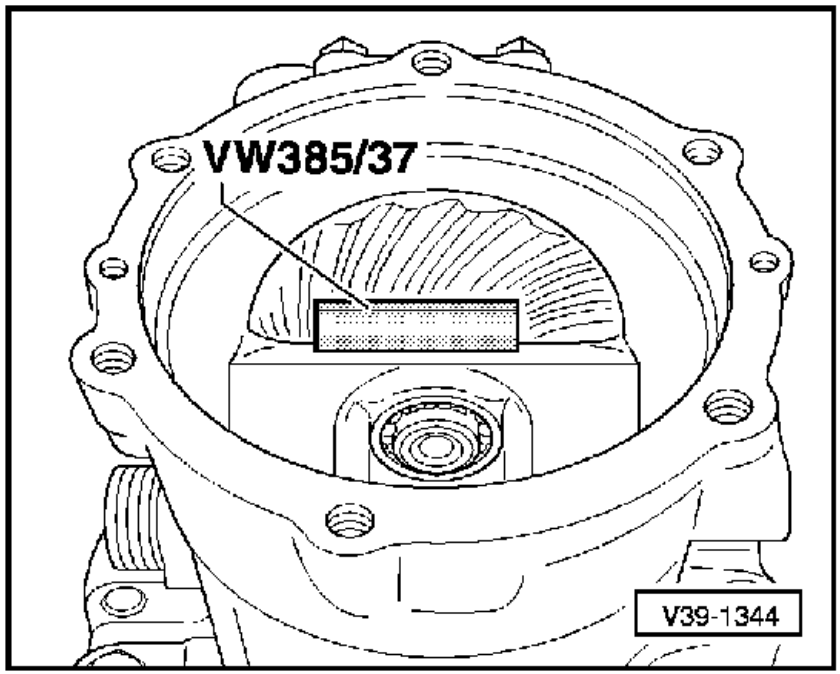


⇦ - Place end measurement plate on head of shaft bevel gear.

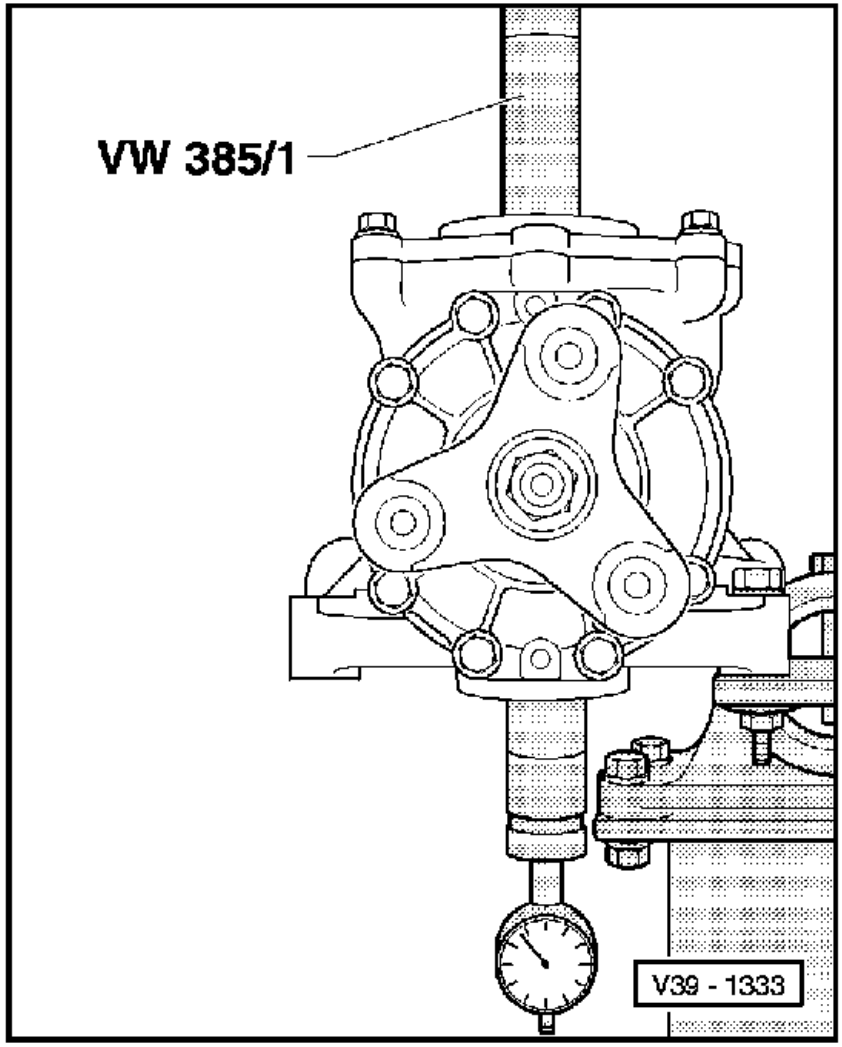


⇦ - Insert universal mandrel.

- Fit cover and tighten hexagon bolts.

- Using sliding setting ring to pull centring disc outwards until mandrel can still just be turned by hand.

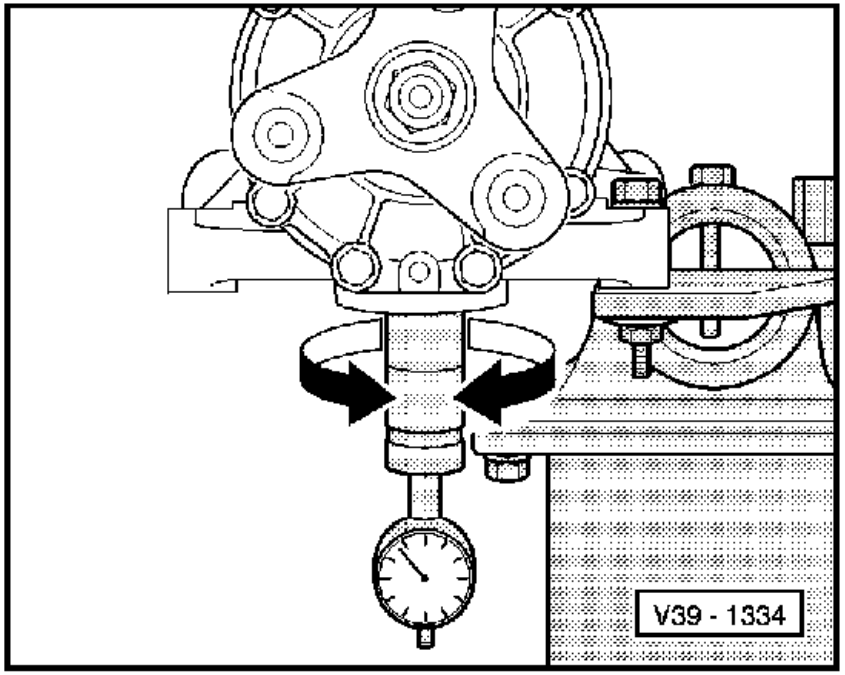


⇦ - Measure dimension "e".
Turn mandrel until tip of dial gauge makes contact with end measuring plate and indicates max. deflection (return point). The measurement achieved is dimension "e" (red figure range). Example: 0.47 mm.

- Remove universal mandrel.

***Note:***

*Finally, check again whether dial gauge returns to "0" with master gauge VW 385/30 of 3 mm preload, otherwise repeat measurement.*

**Determining shim "S3" thickness**

S3 = e + r

| | | |
|---|---|---|
| e | - | Calculated value (max. deflection) |
| r | - | Deflection (given in 1/100 mm on bevel gear) |

**Example:**

| | |
|---|---|
| Indicated value on dial gauge "e" | 0.47 mm |
| Deviation inscribed on bevel gear "r" | +0.33 mm |
| Shim thickness "S3" | =0.80 mm |

The following adjustment shims are available:

| Size (mm) | Part No. |
|---|---|
| 0.15 | 02C 409 114 |
| 0.20 | 02C 409 114A |
| 0.30 | 02C 409 114B |
| 0.40 | 02C 409 114C |
| 0.50 | 02C 409 114D |
| 0.60 | 02C 409 114E |
| 0.70 | 02C 409 114F |
| 0.80 | 02C 409 114G |
| 0.90 | 02C 409 114H |
| 1.00 | 02C 409 114J |
| 1.20 | 02C 409 114K |

- Remove pinion housing with shaft bevel gear.

- Install determined shim S3.

**Carry out check measurement - checking dimension "R"**

Insert universal mandrel and measure dimension "R".

With correctly selected shims, the dial gauge, reading anti clockwise (red number range), must indicate the value of the noted deviation "r" on the bevel gear to within a tolerance of + 0,04 mm.