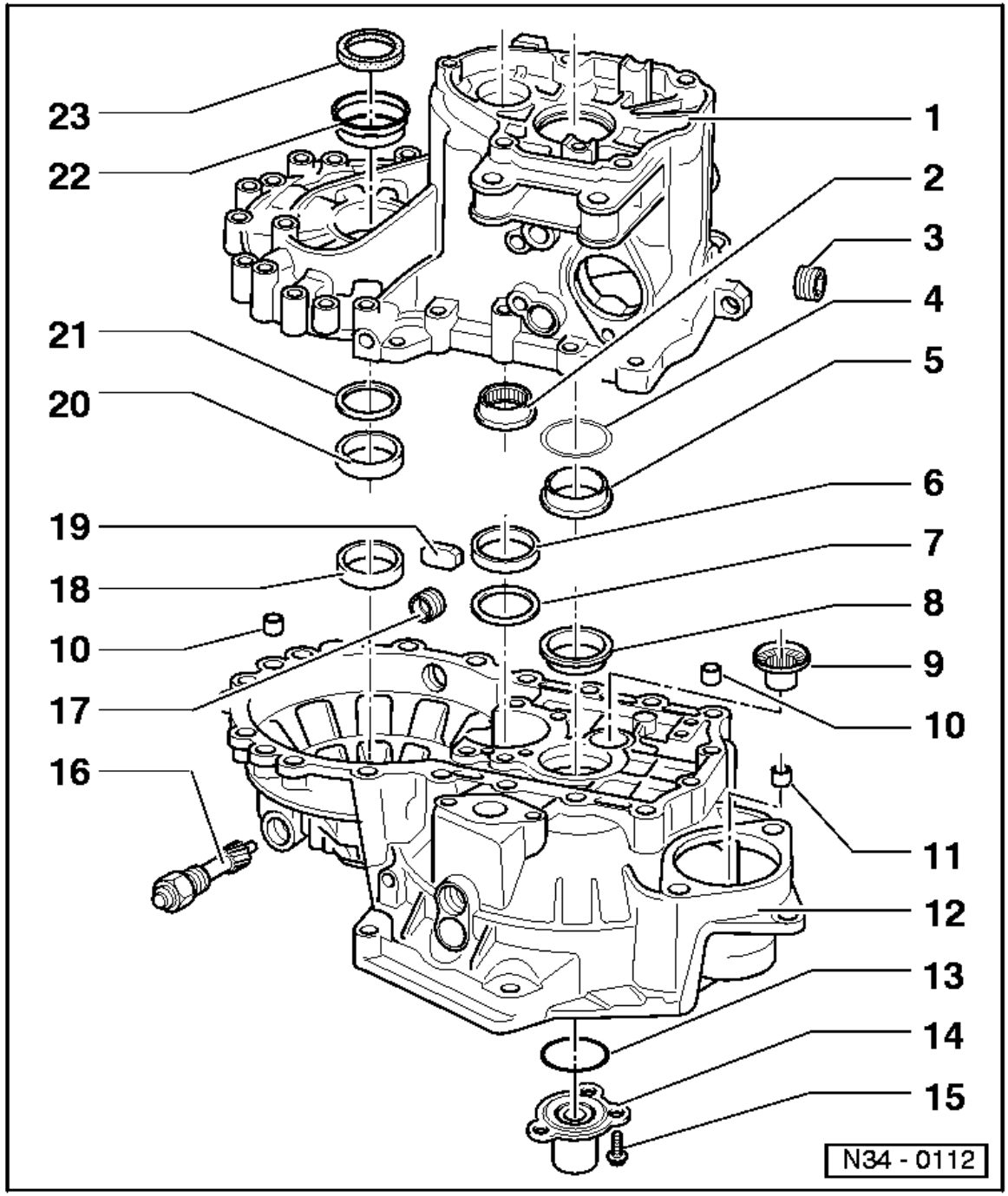

1 - Gearbox housing
- ◆ If replaced: Adjust input shaft and differential => Page 39-22

2 - Needle roller bearing
- ◆ For output shaft
- ◆ Removing => Fig.1
- ◆ Installing and securing => Fig.2

3 - Oil filler plug, 25 Nm
- ◆ Without magnet

4 - Shim
- ◆ For input shaft
- ◆ Adjustment overview => Page 39-22

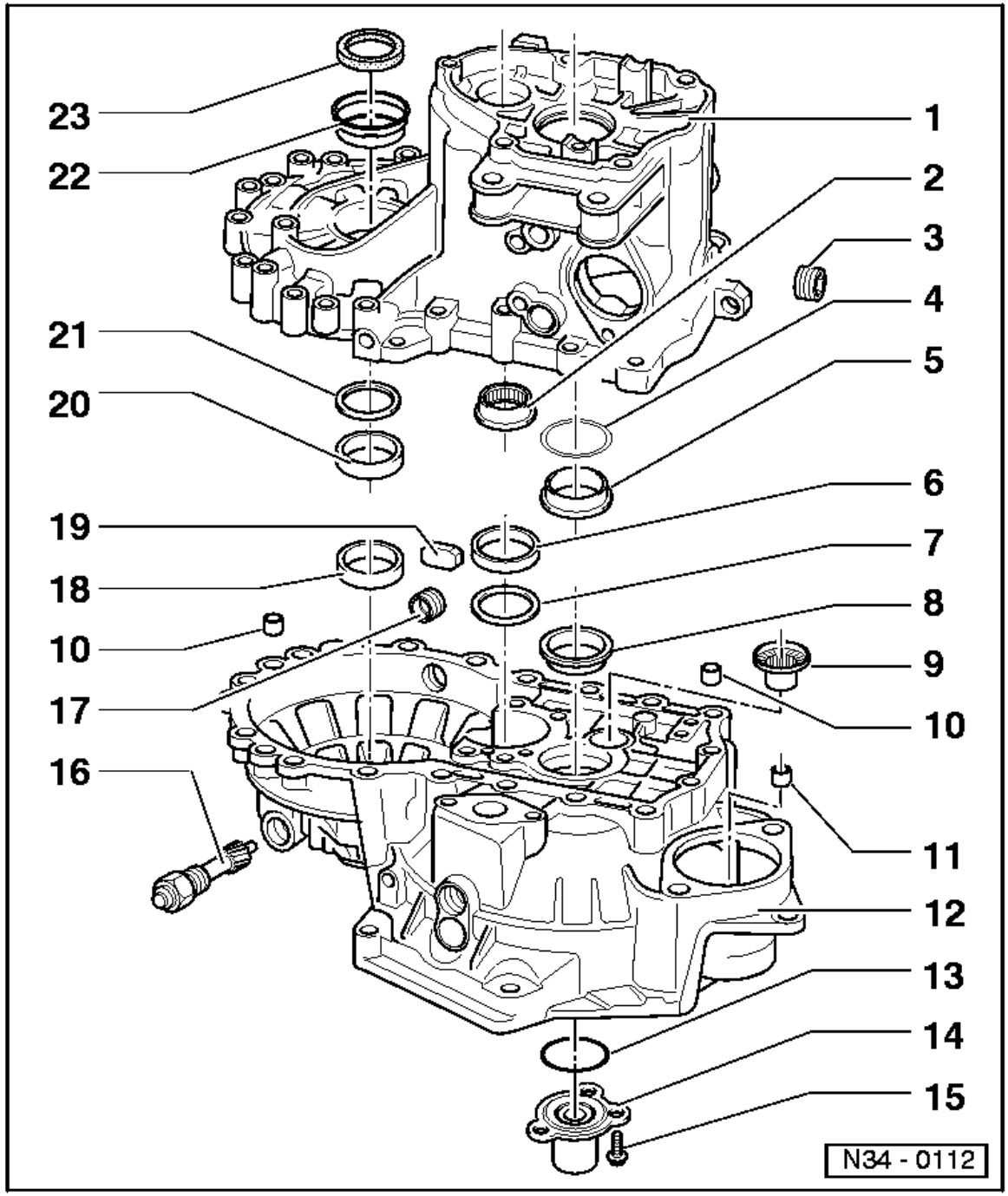

5 - Outer race/taper roller bearing
- ◆ For input shaft
- ◆ Removing and installing
  => Page 35-6
- ◆ If replaced: Adjust input shaft
  => Page 35-13

6 - Outer race/taper roller bearing
- ◆ For output shaft
- ◆ Removing and installing
  => Page 35-29
- ◆ If replaced: Adjust output shaft
  => Page 35-43

7 - Shim
- ◆ For output shaft
- ◆ Adjustment overview
  => Page 39-22

8 - Outer race/taper roller bearing
- ◆ For input shaft
- ◆ Removing and installing
  => Page 35-10
- ◆ If replaced: Adjust input shaft
  => Page 35-13

9 - Needle bearing
- ◆ Removing and installing
  => Page 35-49

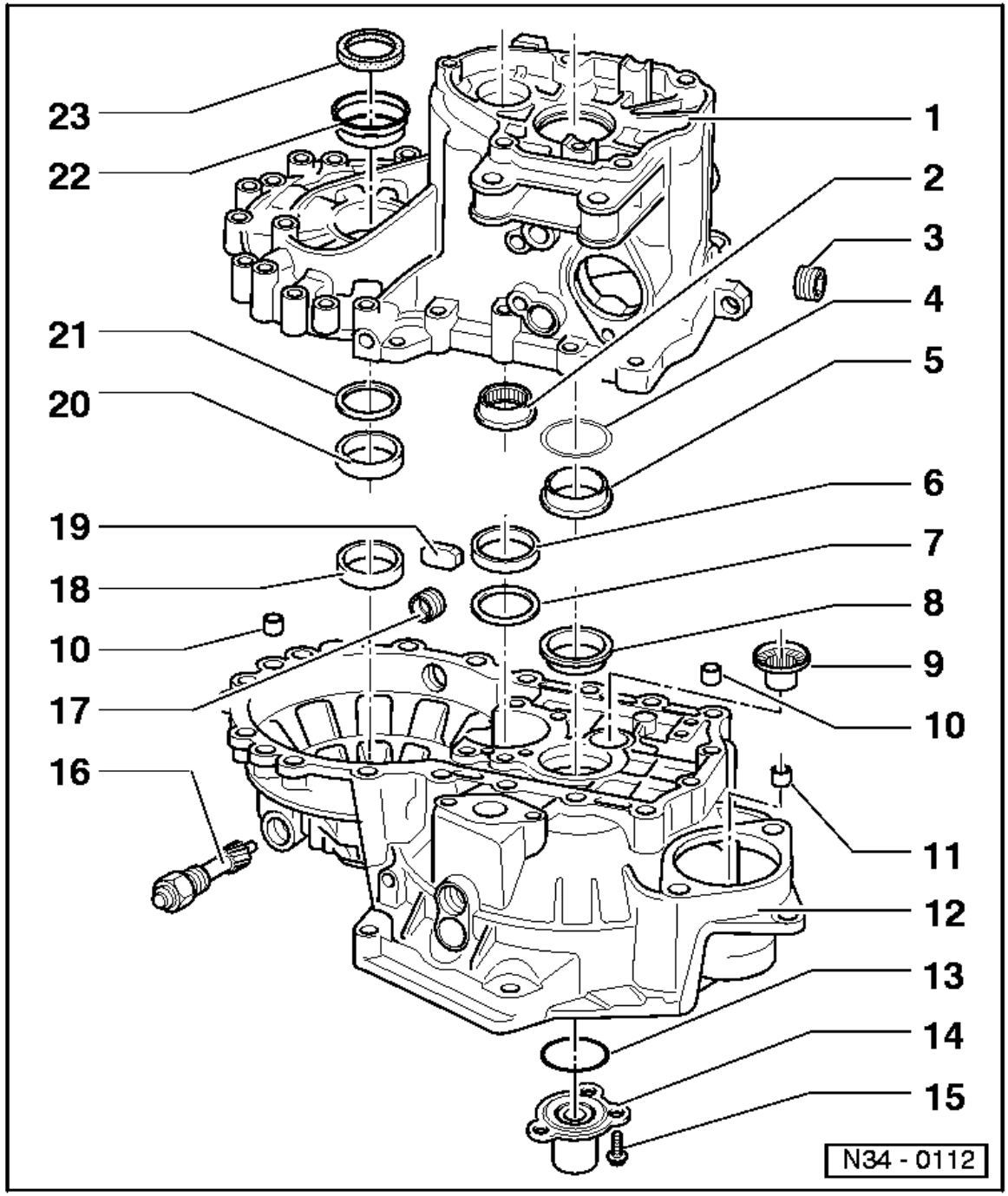

10 - Dowel sleeve
- ◆ Qty. 2

11 - Starter bush
- ◆ Pulling out => Fig.5
- ◆ Knocking in => Fig.6
- ◆ Can be replaced without removing gearbox

12 - Clutch housing
- ◆ If replaced: Adjustment overview
  => Page 39-22
- ◆ Differing gearbox to engine flanges: 4 cylinder engine
  =>Page 34-38
  6 cylinder injection engine
  =>Page 34-58

13 - O-ring
- ◆ Always renew
- ◆ Place on guide sleeve and apply multi-purpose grease

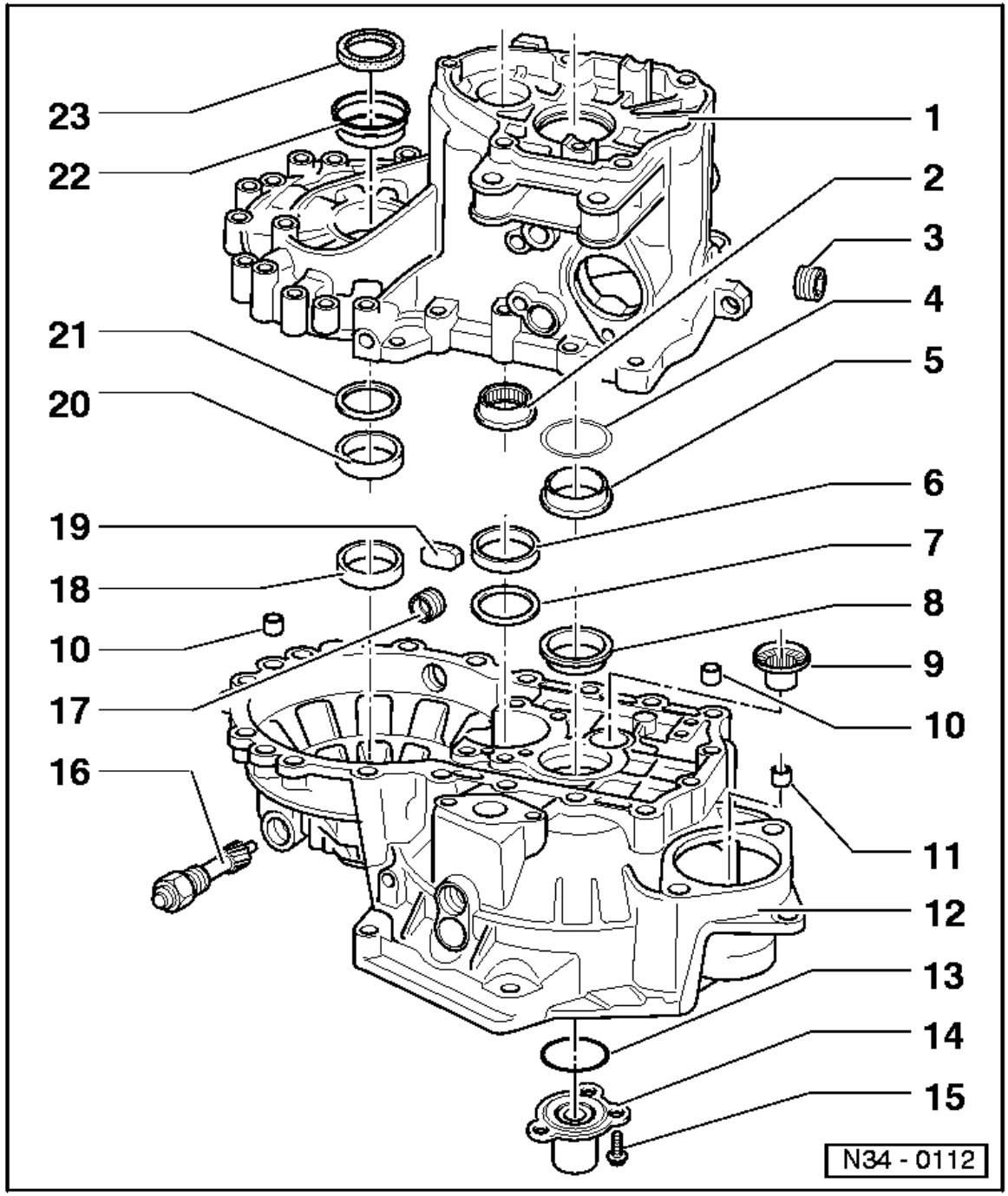

14 - Guide sleeve
- ◆ With oil seal
- ◆ Knocking-out oil seal => Fig.3
- ◆ Knocking-in oil seal => Fig.4
- ◆ Remove guide sleeve to change the oil seal

15 - Socket head bolt, 20 Nm
- ◆ Self-locking
- ◆ Always renew

16 - Speedometer drive, 30 Nm

17 - Oil drain plug, 25 Nm
- ◆ Without magnet

18 - Outer race/taper roller bearing
- ◆ For differential
- ◆ Driving out and in
  => Page 39-11
- ◆ If replaced: Adjust differential
  => Page 39-23

19 - Magnet
- ◆ Held in place by housing joint surface

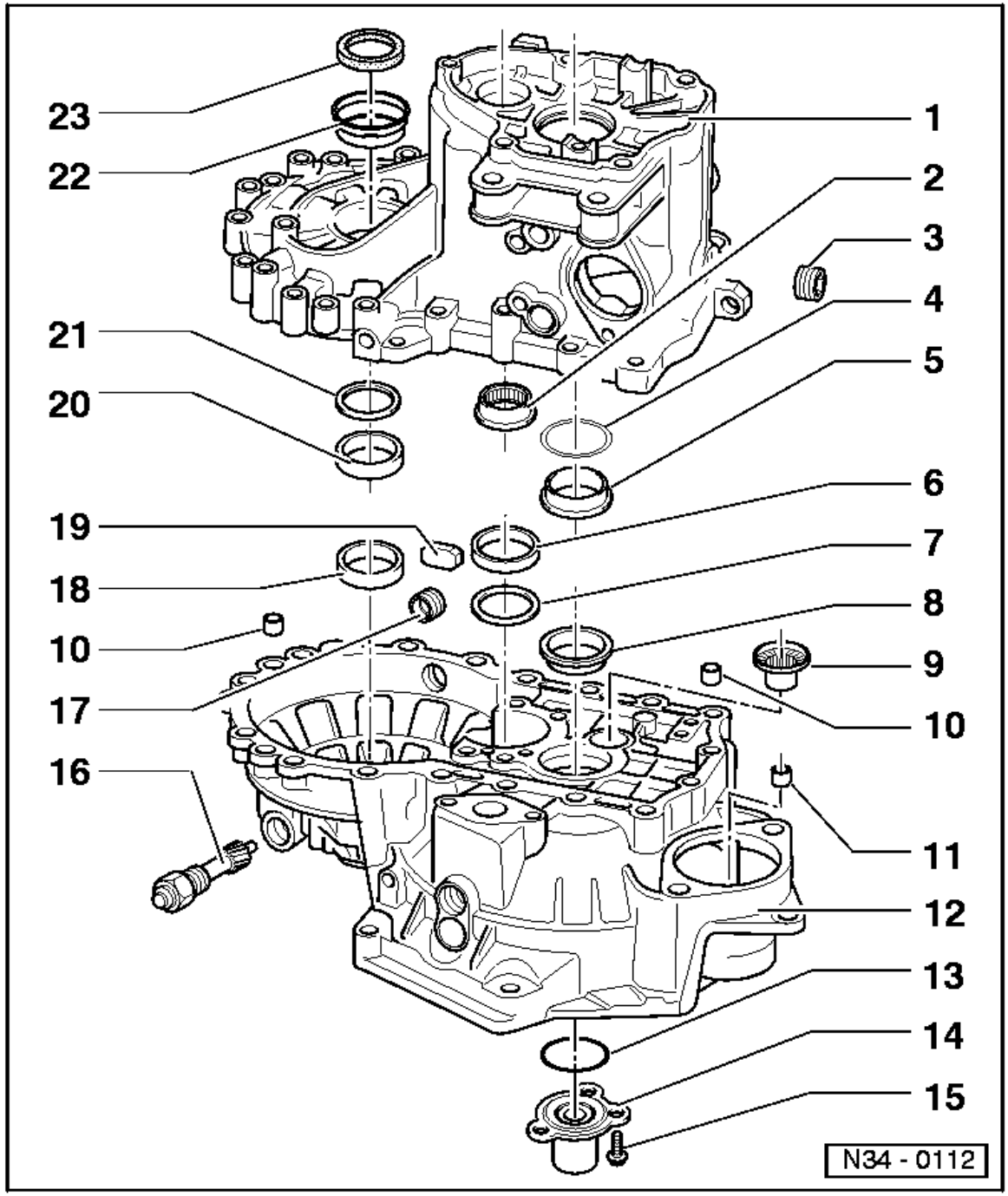

20 - Outer race/taper roller bearing
- ◆ For differential
- ◆ Driving in and out
  => Page 39-8
- ◆ If replaced: Adjust differential
  => Page 39-23

21 - Shim
- ◆ For differential
- ◆ Adjustment overview
  => Page 39-22

22 - Sleeve
- ◆ For oil seal (Item 23)
- ◆ Removing => Fig.7
- ◆ Installing => Fig.8

23 - Oil seal
- ◆ Renewing => Page 39-1

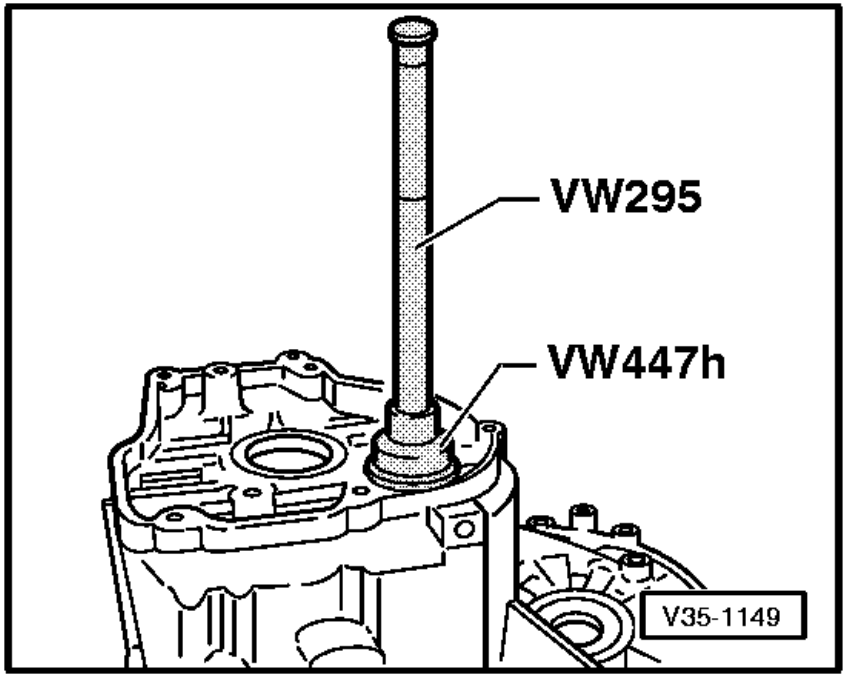

⇦ **Fig.1Driving out needle roller bearing**

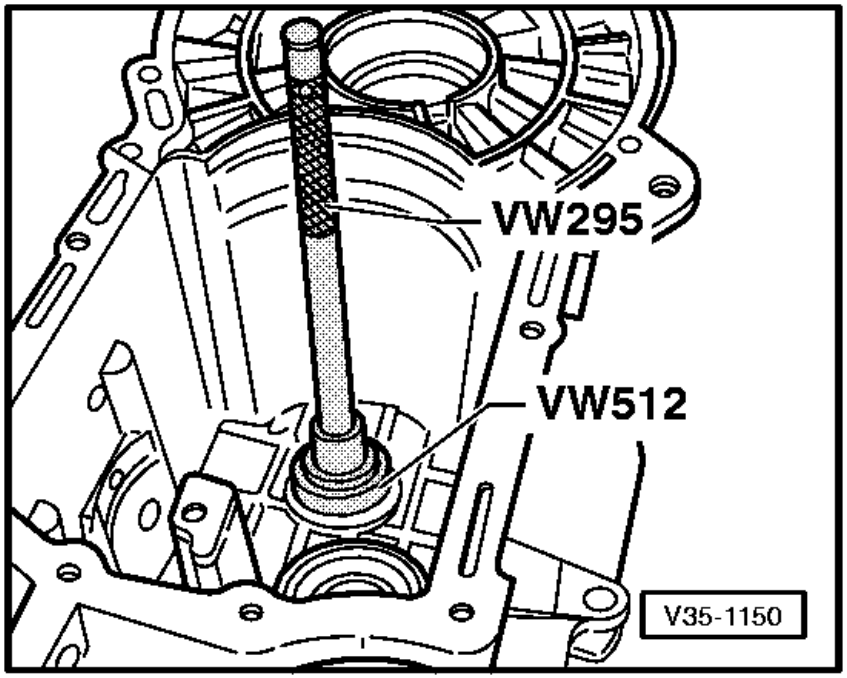

⇦ **Fig.2Knocking needle roller bearing in onto stop**

- Secure needle roller bearing in gearbox housing at three points (120° offset) with a punch.

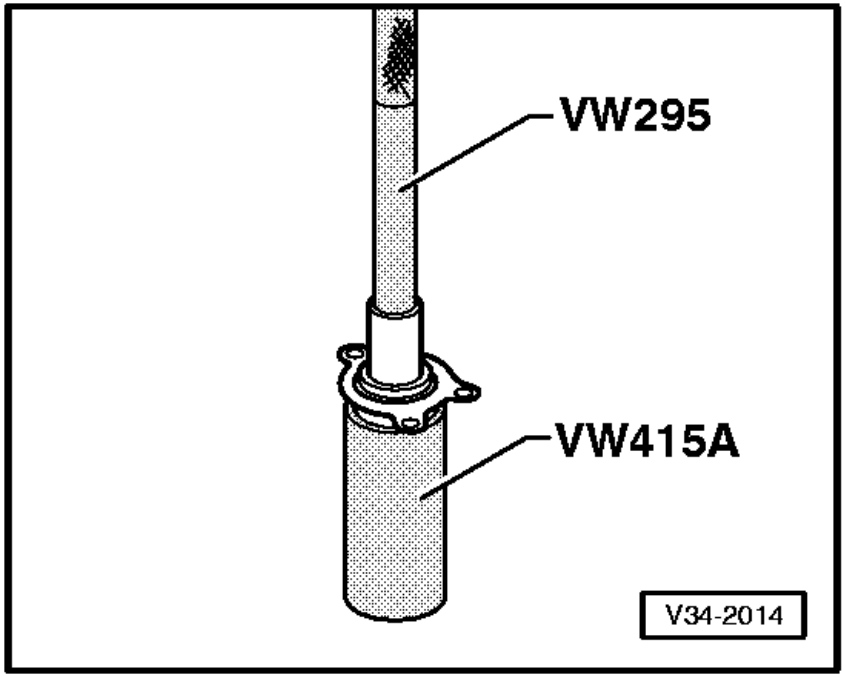

⇦ **Fig.3Driving oil seal out of guide sleeve.**

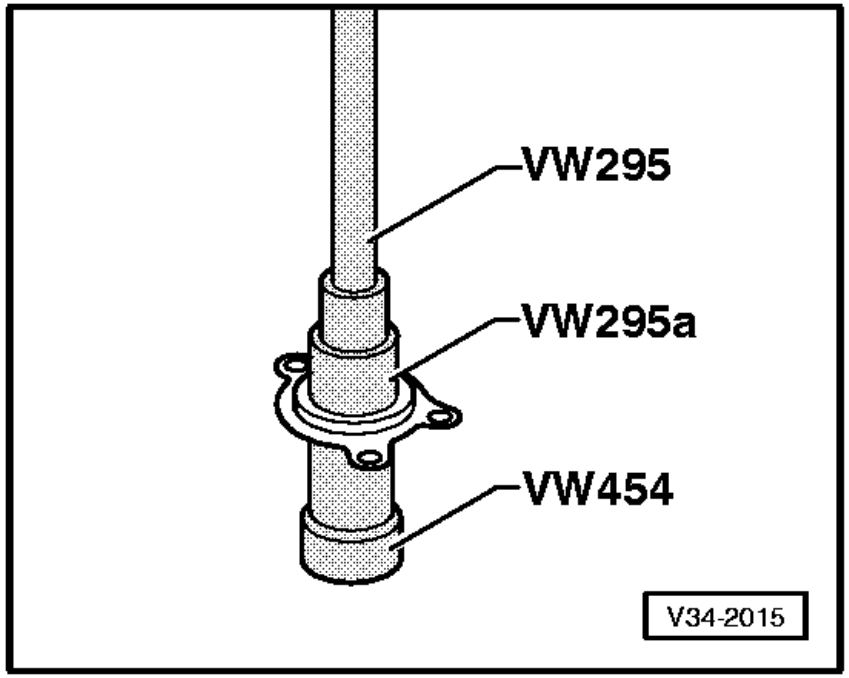

⇦ **Fig.4Driving oil seal into the guide sleeve onto stop.**

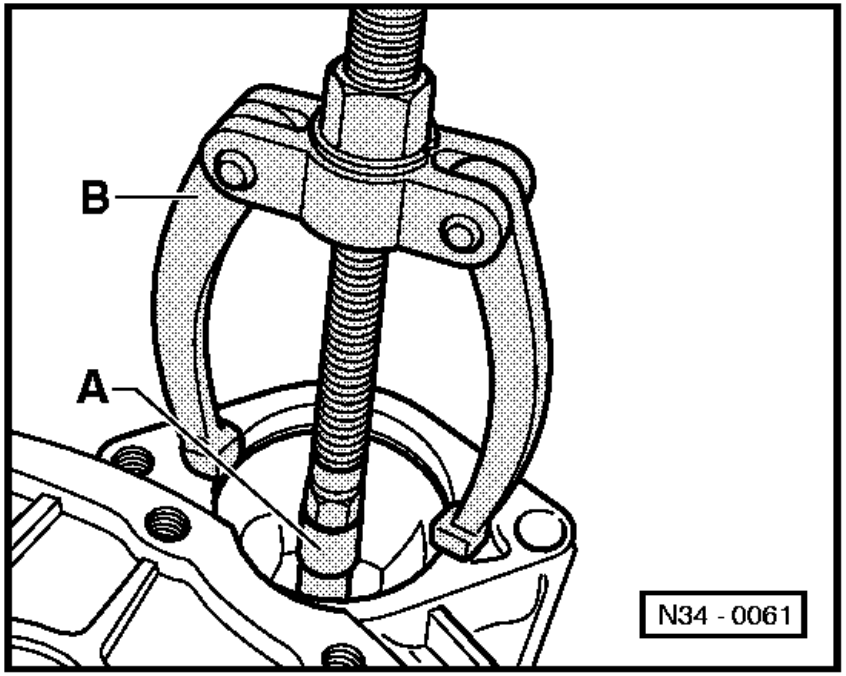

⇦ **Fig.5Pulling out starter bush.**

A - Internal extractor, e.g. Kukko 21/2, 14.5 ... 18.5 mm

B - Counter support. e.g. Kukko 22/1

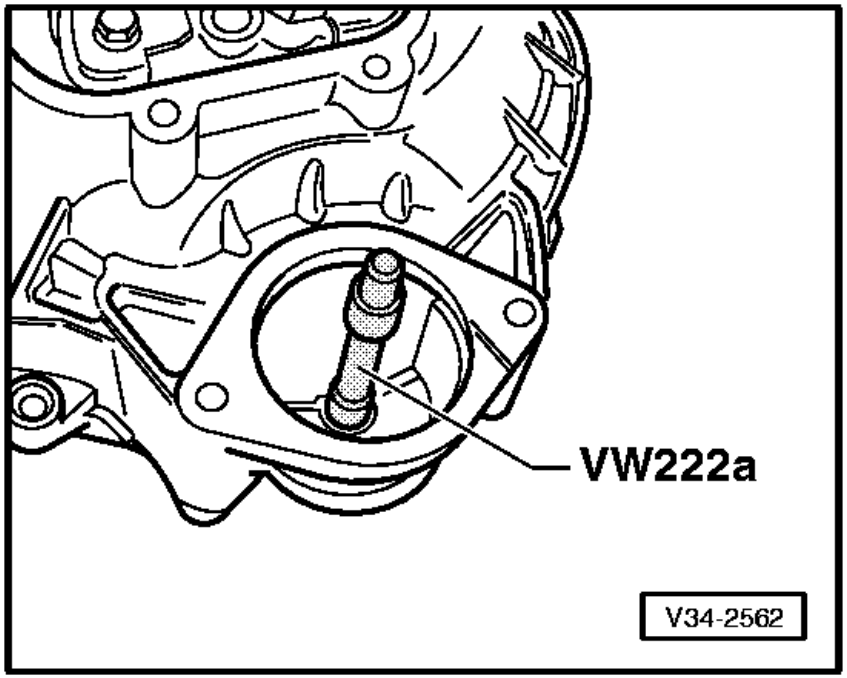

⇦ **Fig.6Driving in starter bush.**

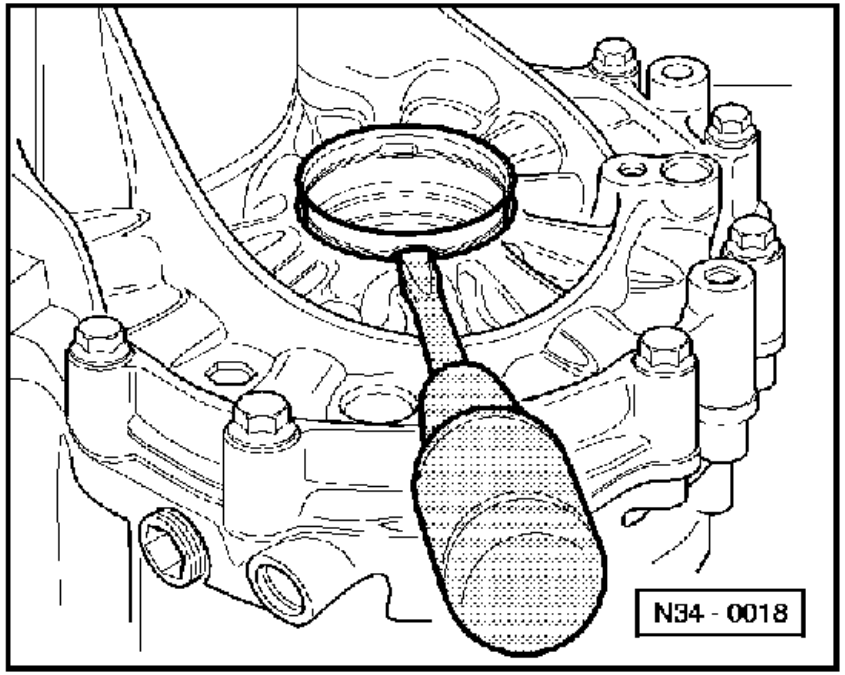

⇦ **Fig.7Lever out sleeve with screwdriver**

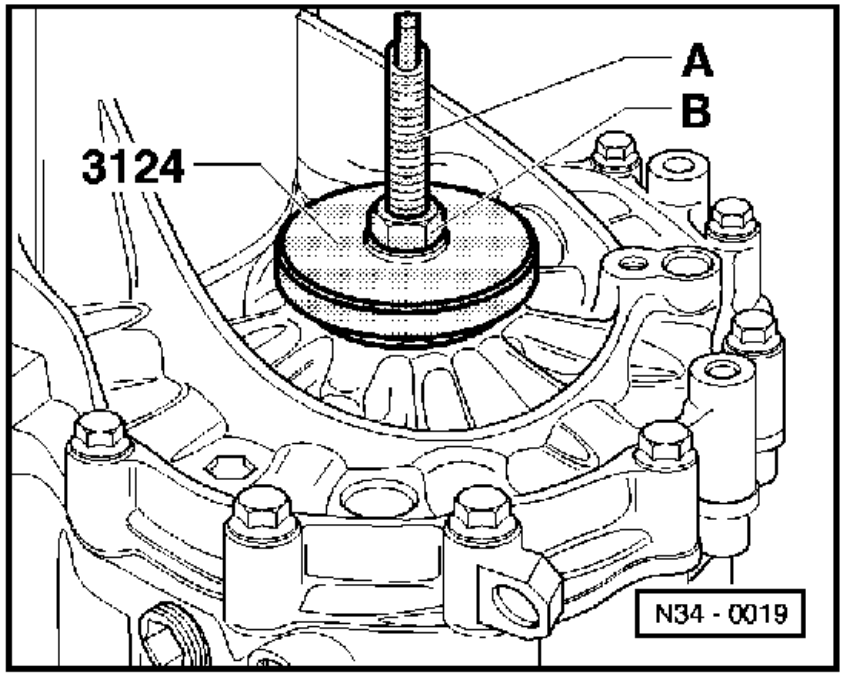

⇦ **Fig.8Pulling sleeve in**

A -	Screw threaded rod from assembly device 3066 into differential threaded piece
B -	Nut M12 with washer

- Pull sleeve in onto stop with thrust piece 3124 by turning on nut -B-.

Note:

When gearbox is dismantled press sleeve in with thrust piece 3124 onto stop.