Renewing left-hand flange shaft oil seal

Removing

- Only loosen drive shaft/wheel hub nut and wheel bolts when vehicle is standing on its own wheels.

- Remove wheel.

- Remove drive shaft

=> Running gear; Repair group 40=>

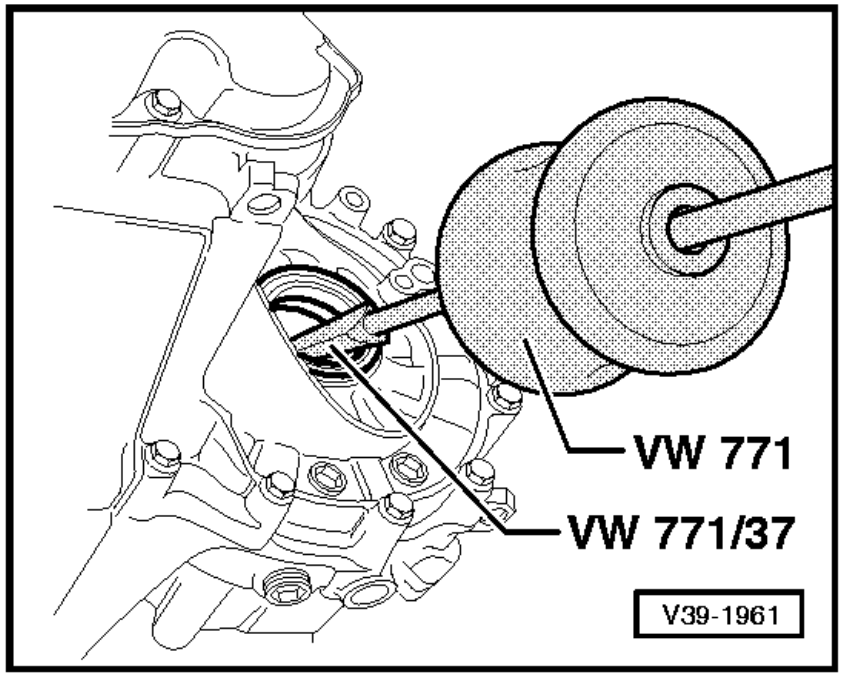

- Place drip tray underneath.

- Remove flange shaft cone head bolt with V.A.G 1669 or (commercially available) 6 mm socket, counterhold with drift.

- Remove flanged shaft with spring.

⇦ - Pull out seal.

Notes:

◆ Do not damage sleeve, otherwise leaks will occur.

◆ Replace sleeve if damaged
=> Page 34-117.

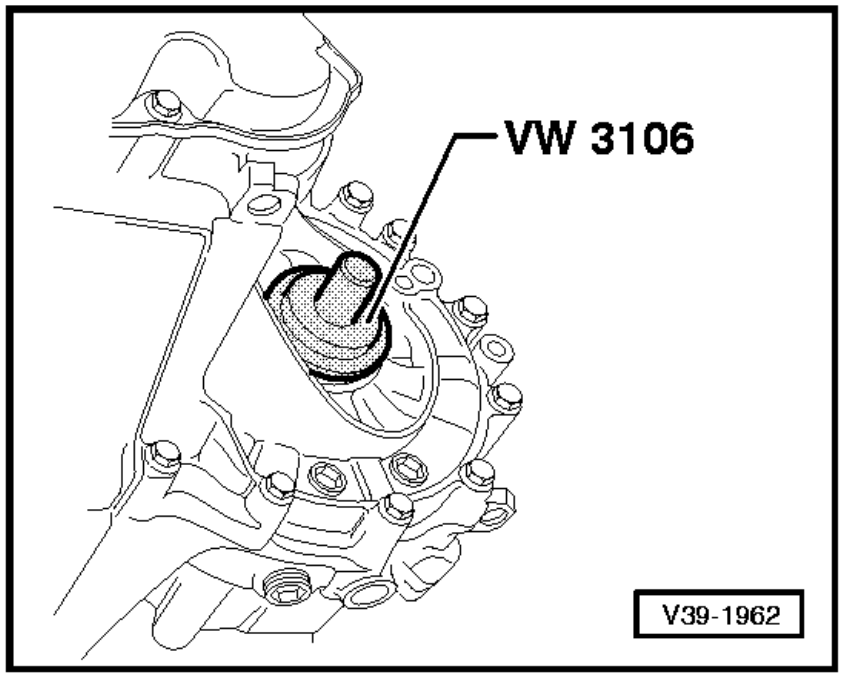

⇦ - Drive seal into sleeve onto stop, when doing this do not cant seal.

- Fill space between sealing lip and dust lip with multi-purpose grease.

- Insert drive shaft.

- Secure flange shaft with counter sunk head bolt.

- Install drive shaft.

- Fit wheel.

- Screw nut (self-locking) onto drive shaft and only when vehicle standing on its wheels tighten wheel and drive shaft.

- Checking oil in gearbox with bevel box
=> Page 34-79.

Tightening torques

Flange shaft to gearbox (cone head bolt)	25 Nm
Drive shaft to flange shaft	45 Nm
Wheel to wheel hub	110 Nm