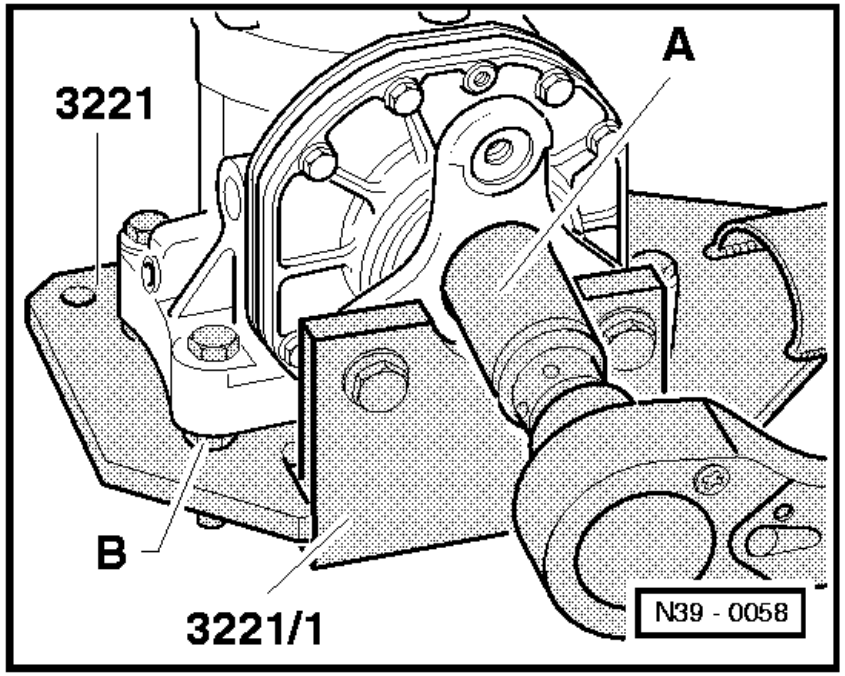

Note:

The bevel box output shaft to propshaft oil seal can only be renewed with the bevel box removed.

- Removing bevel box => Page 34-61.

⇦ - Secure bevel box in gearbox support.

B - Nut M12 x 10 (Qty. 4)

- Remove hexagon nut using socket -A-.

- Swing bevel box so that output flange points upwards.

- Remove output flange.

- Lever out seal using a screwdriver.

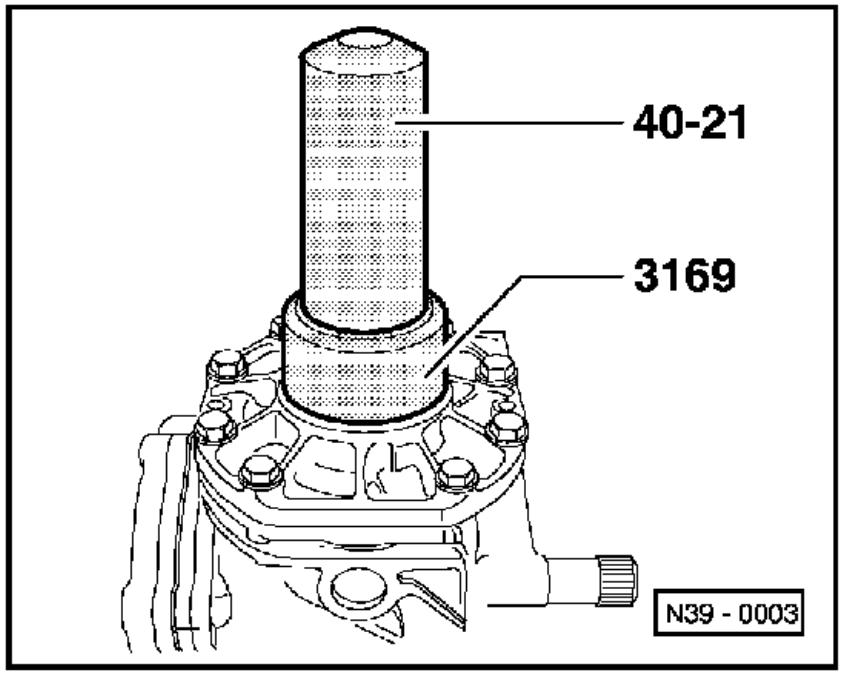

⇦ - Drive new oil seal in flush.

- Install output shaft and tighten to 350 Nm.

- Installing bevel box => Page 34-61.

- Checking oil in gearbox with bevel box
  => Page 34-79.