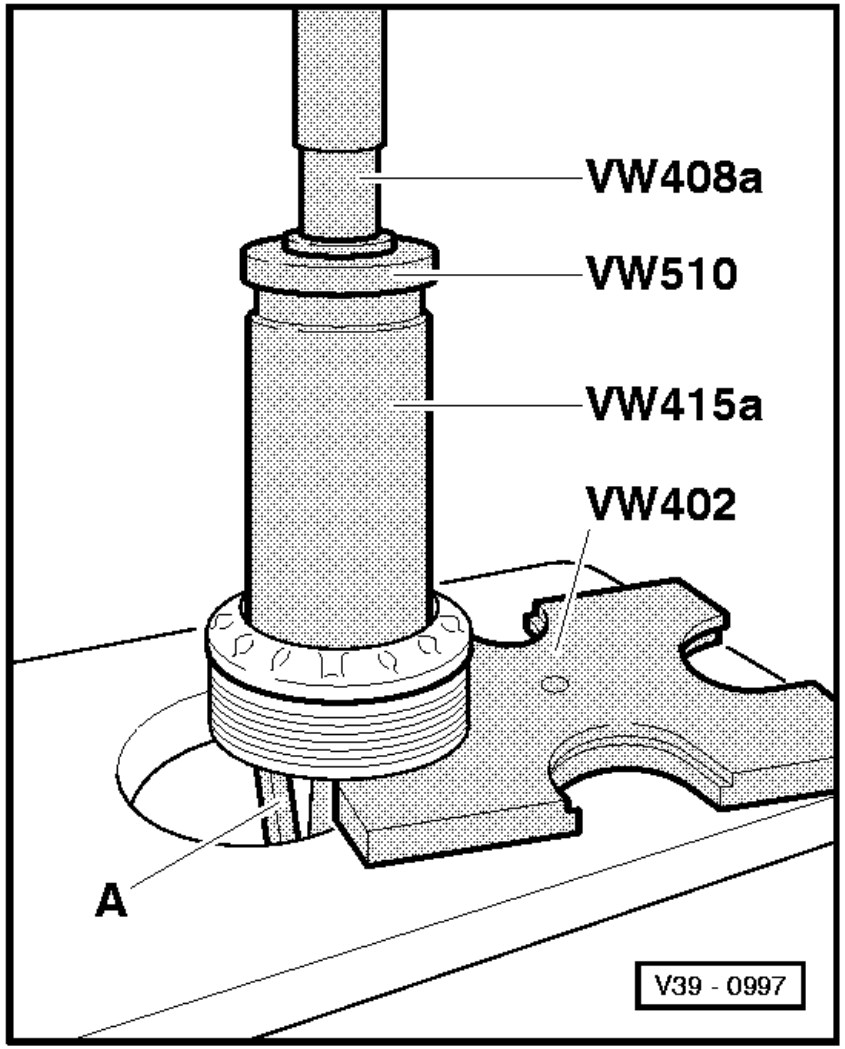

Rear axle housing has been removed from bevel gear housing => Page 39-125.

⇦ - Pressing large taper roller bearing outer race out of ring nut.

To do this expand internal puller -A- behind outer race and press out with VW 415 a.

A - Internal puller 56 ... 70 mm, e.g. Kukko 21/8

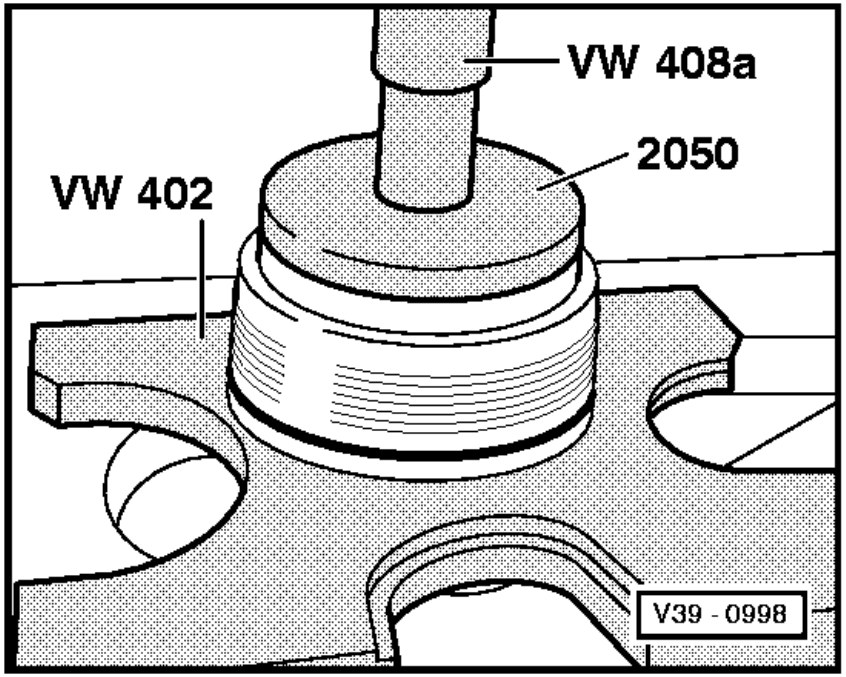

⇦ - Pressing large taper roller bearing outer race into ring nut.

⇦ - Pulling large taper roller bearing inner race from bevel gear.

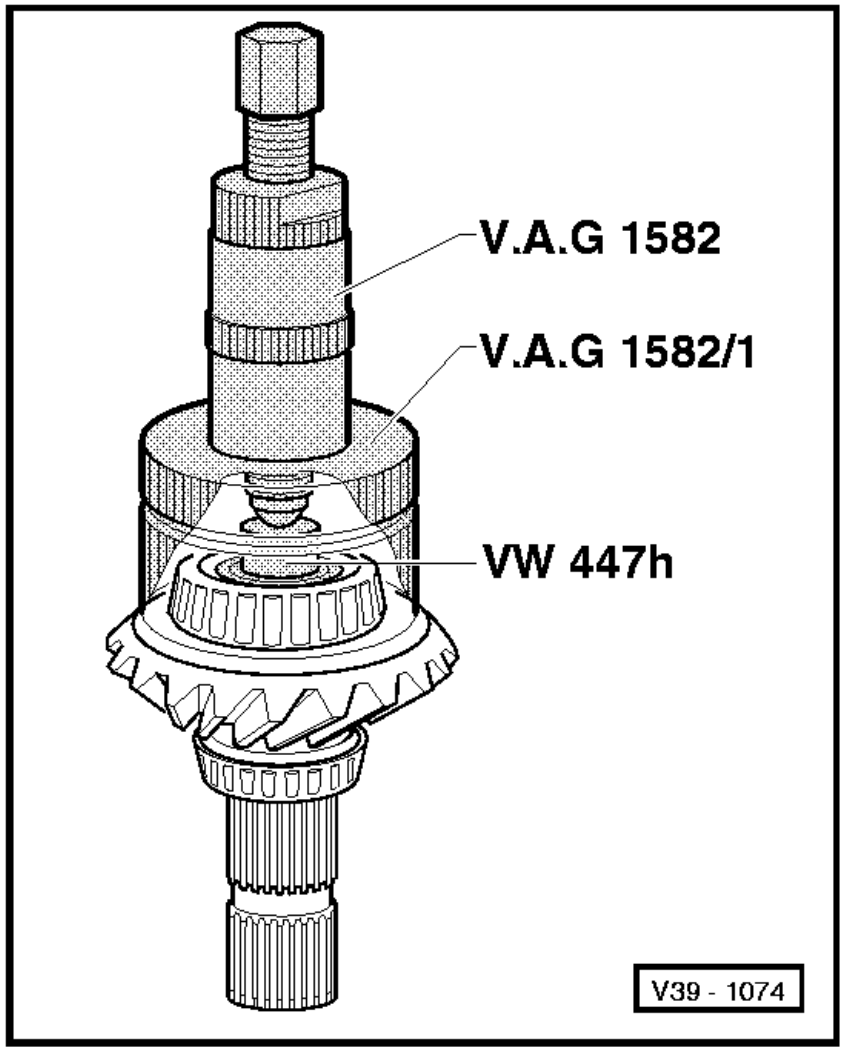

Position extractor and clamp securely behind bearing rollers. Then turn bearing and re-tension extractor.

⇦ - Pressing small taper roller bearing inner race off input shaft.

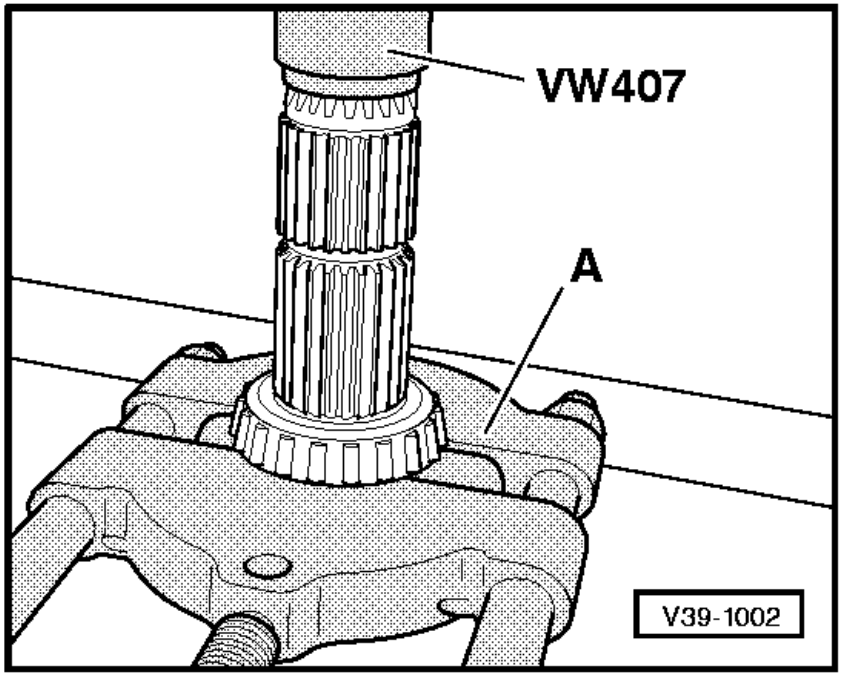

Position large separating tool -A- as illustrated so that the bearing is not damaged.

A - Separating tool 22 ... 115 mm, e.g. Kukko 17/2

⇦ - Pressing large taper roller bearing inner race onto bevel gear.

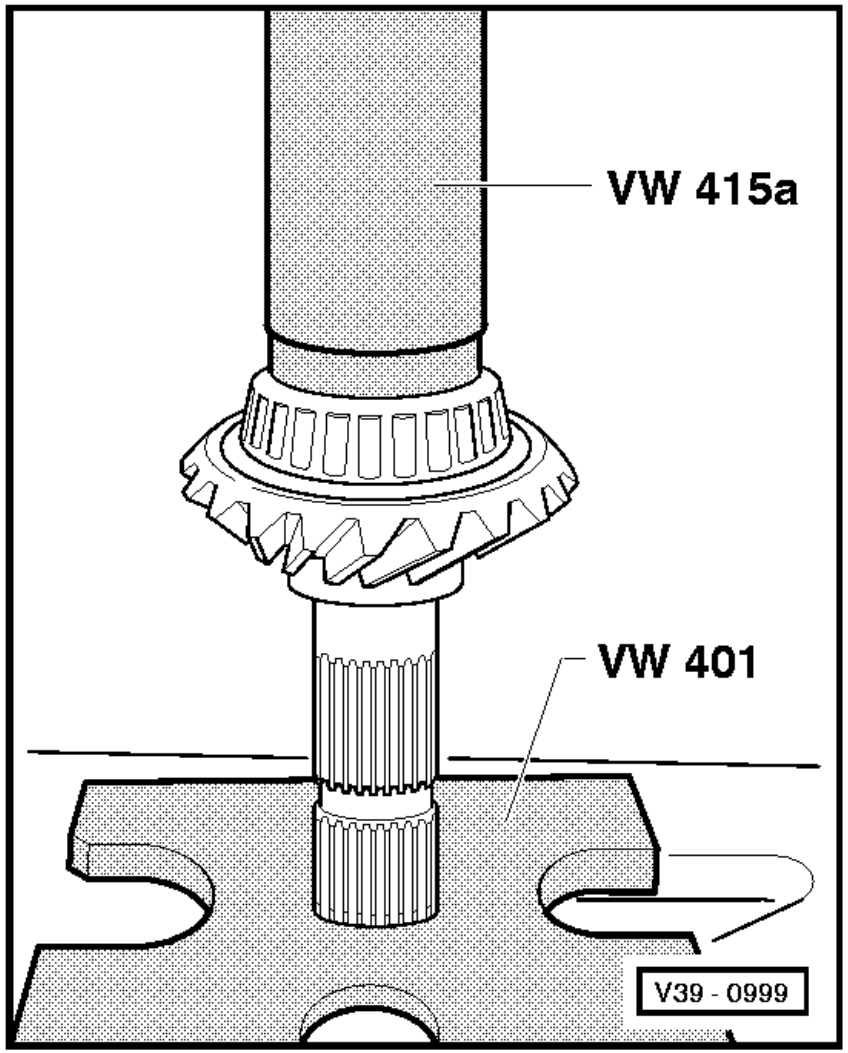

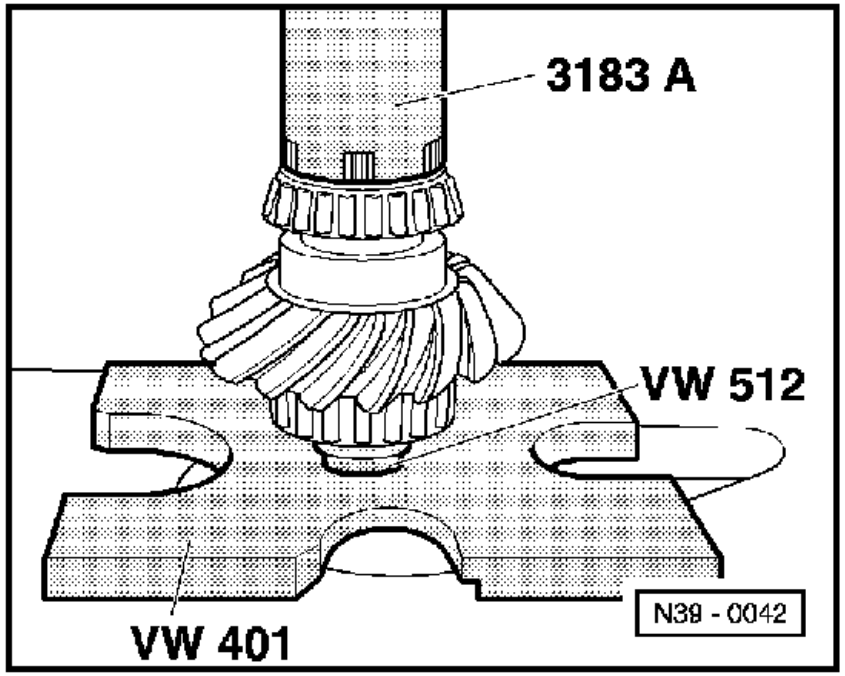

⇦ - Pressing small taper roller bearing inner race onto input shaft.

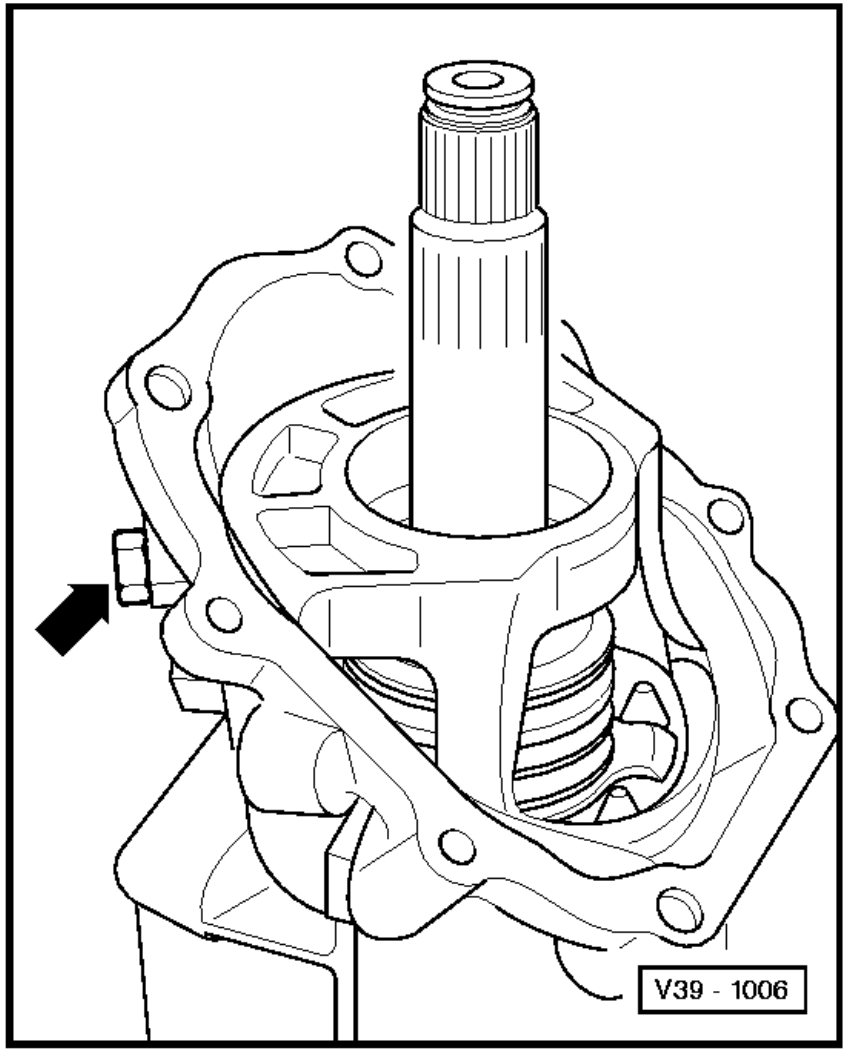

⇦ - Remove bearing support from rear axle housing, to do this remove hexagon bolts (Qty. 2, only one visible -arrow- in illustration).

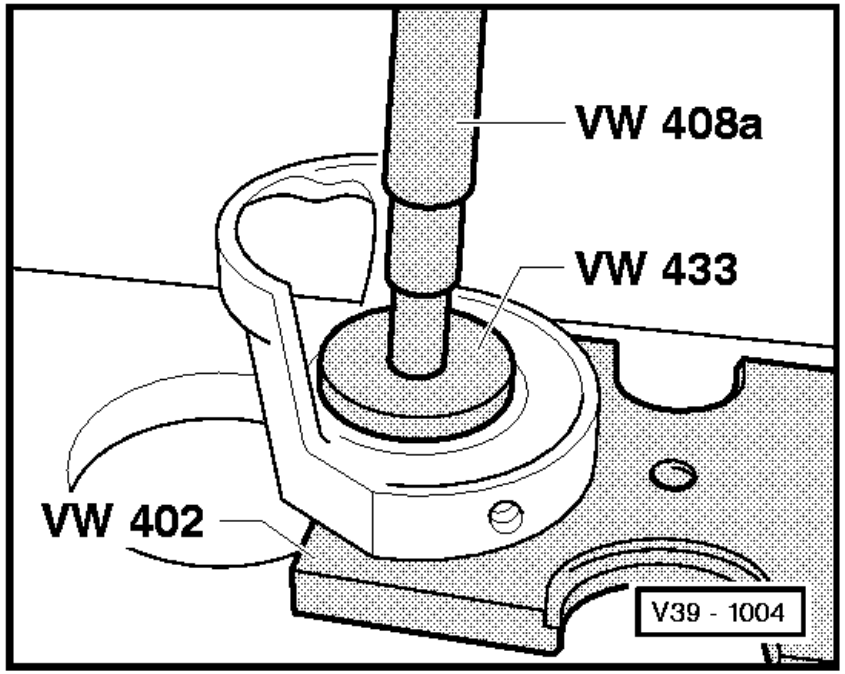

⇦ - Pressing small taper roller bearing outer race out of bearing support.

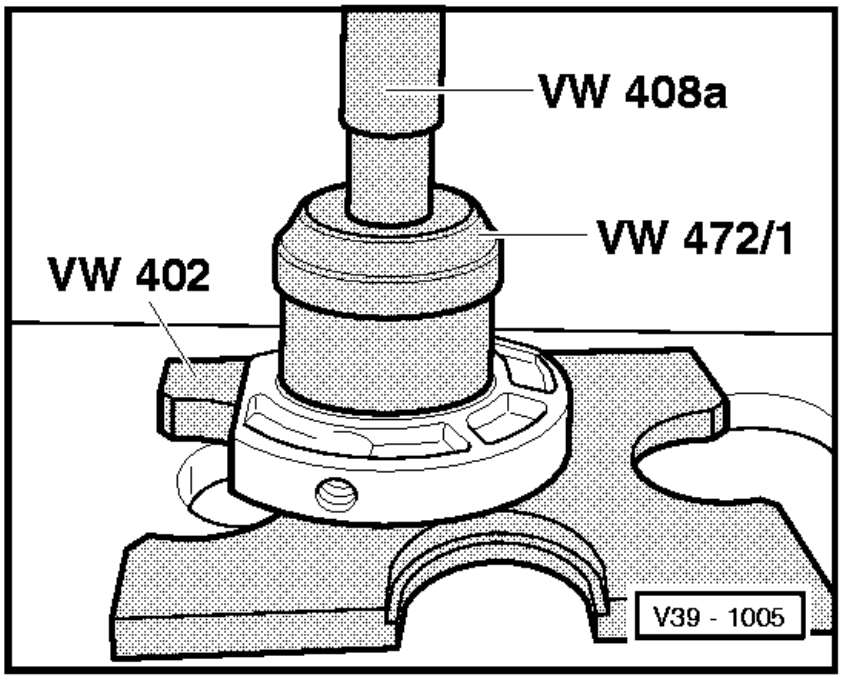

⇦ - Pressing small taper roller bearing outer race into bearing support.

First insert shim S2.