Removing

- Only loosen drive shaft/wheel hub nut and wheel bolts when vehicle is standing on its own wheels.

- Remove wheel.

- Remove drive shaft

=> Running gear; Repair group 40=>

- Remove cap by piercing cap centre with a screwdriver and levering out.

- Place drip tray underneath.

- Remove drive flange/output shaft counter sunk head bolt with V.A.G 1669 or 6 mm socket insert (commercially available) and counter hold against turning with a drift.

- Pull drive flange/output shaft out.

- Lever drive flange seal out.

Installing

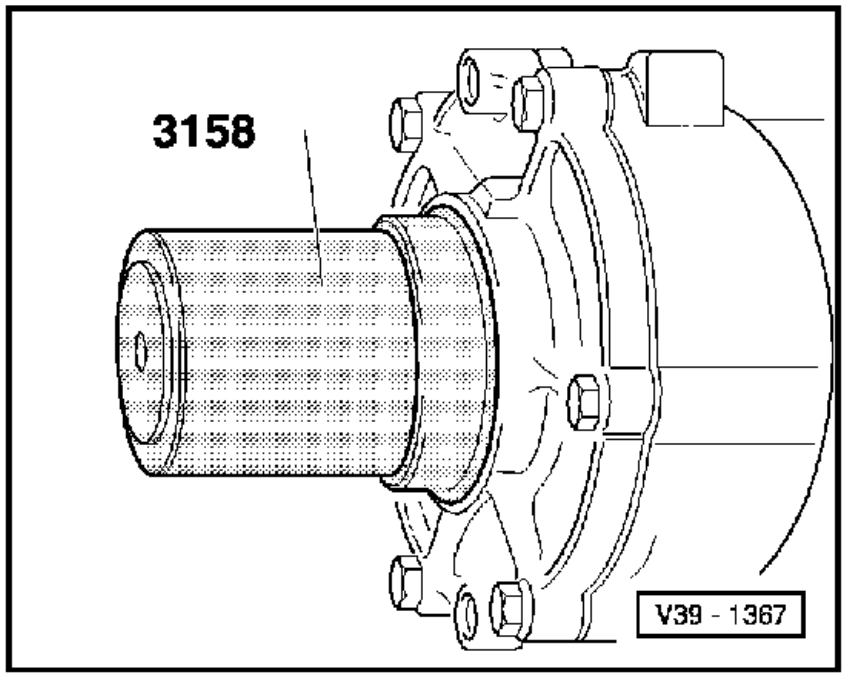

⇦ - Drive new seal in onto stop (illustration shows bevel box removed).

- Fill space between sealing lip and dust lip with multi-purpose grease.

- Insert drive flange/output shaft.

- Secure drive flange/output shaft with counter sunk head bolt.

- Press in a new cap.

- Install drive shaft.

- Fit wheel.

- Screw nut (self-locking) onto drive shaft and only when vehicle standing on its wheels tighten wheel and drive shaft.

- Checking oil in gearbox with bevel box
  => Page 34-79.

Tightening torques

Drive flange/output shaft to gearbox (counter sunk head bolt)	25 Nm
Drive shaft to drive flange	45 Nm
Wheel to wheel hub	110 Nm