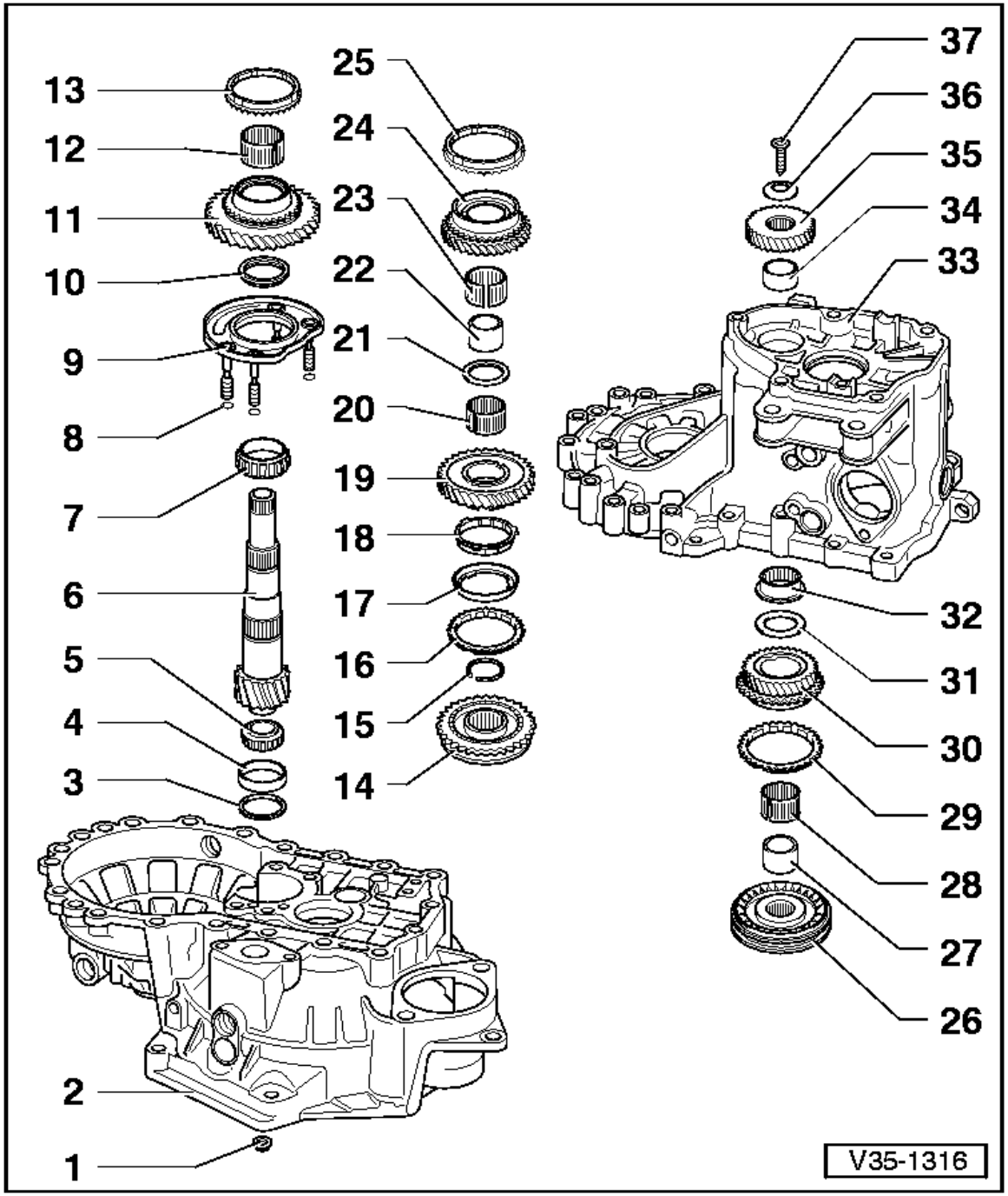

Notes:

◆ The output shaft is dismantled as follows:
- Position separating device under 2nd gear wheel (item19) and press off as described in Fig. 5.
- Remove circlip (item15).
- Position two-arm puller under bearing support (item 9) and pull off locking collar with 1st and 2nd gear synchro-hub as described in Fig.6.

◆ When installing new gear wheels or a new output shaft consult technical data
=>Page 00-3.

◆ The output shaft must be re-adjusted, if the position of the taper roller bearings is affected when exchanging parts. See adjustment overview => Page 39-22

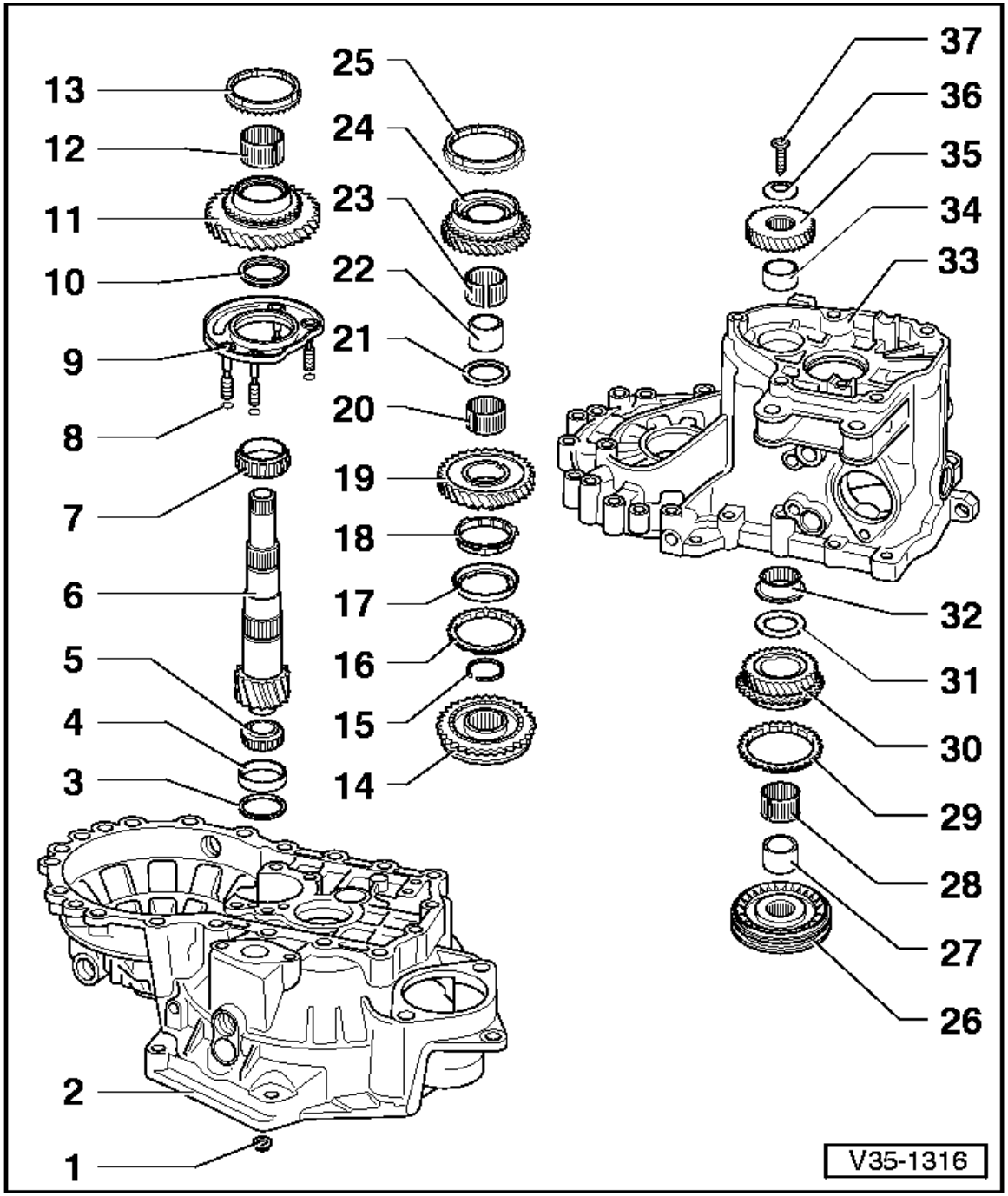

◆ Removing and installing output shaft
=> from Page 34-89.

◆ Both taper roller bearings must be renewed together as a set.

1 - Hexagon nut, 25 Nm and then turn 90°further
◆ 4 nuts for bearing support

2 - Clutch housing

3 - Shim
◆ Determining thickness => Page 35-43Adjusting output shaft

4 - Small taper roller bearing outer race
◆ Removing => Fig.1
◆ Pressing in => Fig.2

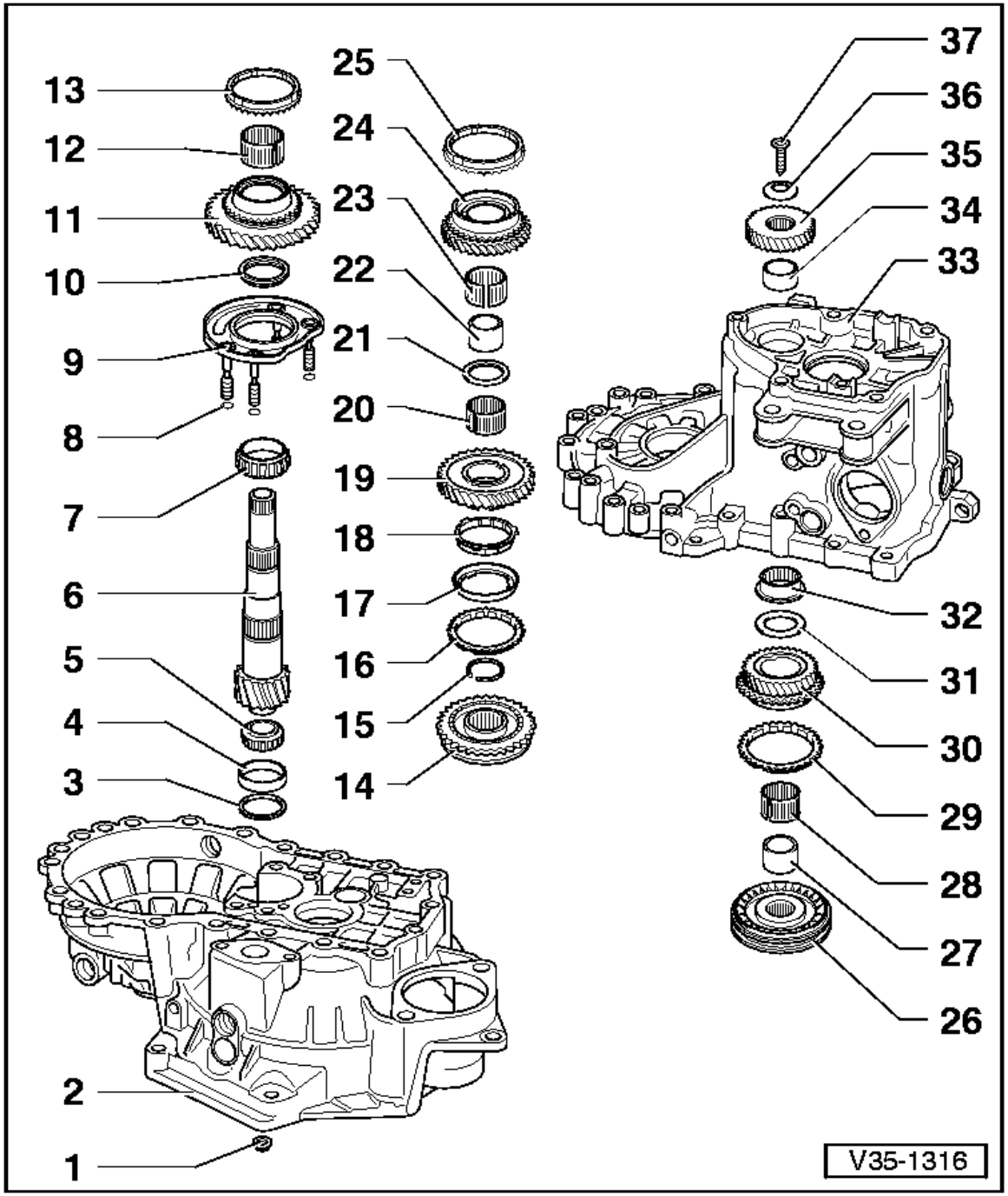

5 - Small taper roller bearing inner race

- ◆ Pulling off => Fig.3
- ◆ Pressing on => Fig.4

6 - Output shaft

- ◆ Is paired with final drive gear wheel, always renew together as a set
- ◆ Adjusting => Page 35-43

7 - Large taper roller bearing inner race

- ◆ Pulling off => Fig. 7
- ◆ Pressing on => Fig.8

8 - Sealing ring

- ◆ Place sealing rings (Qty. 4) on the bearing support bolts
- ◆ Always renew

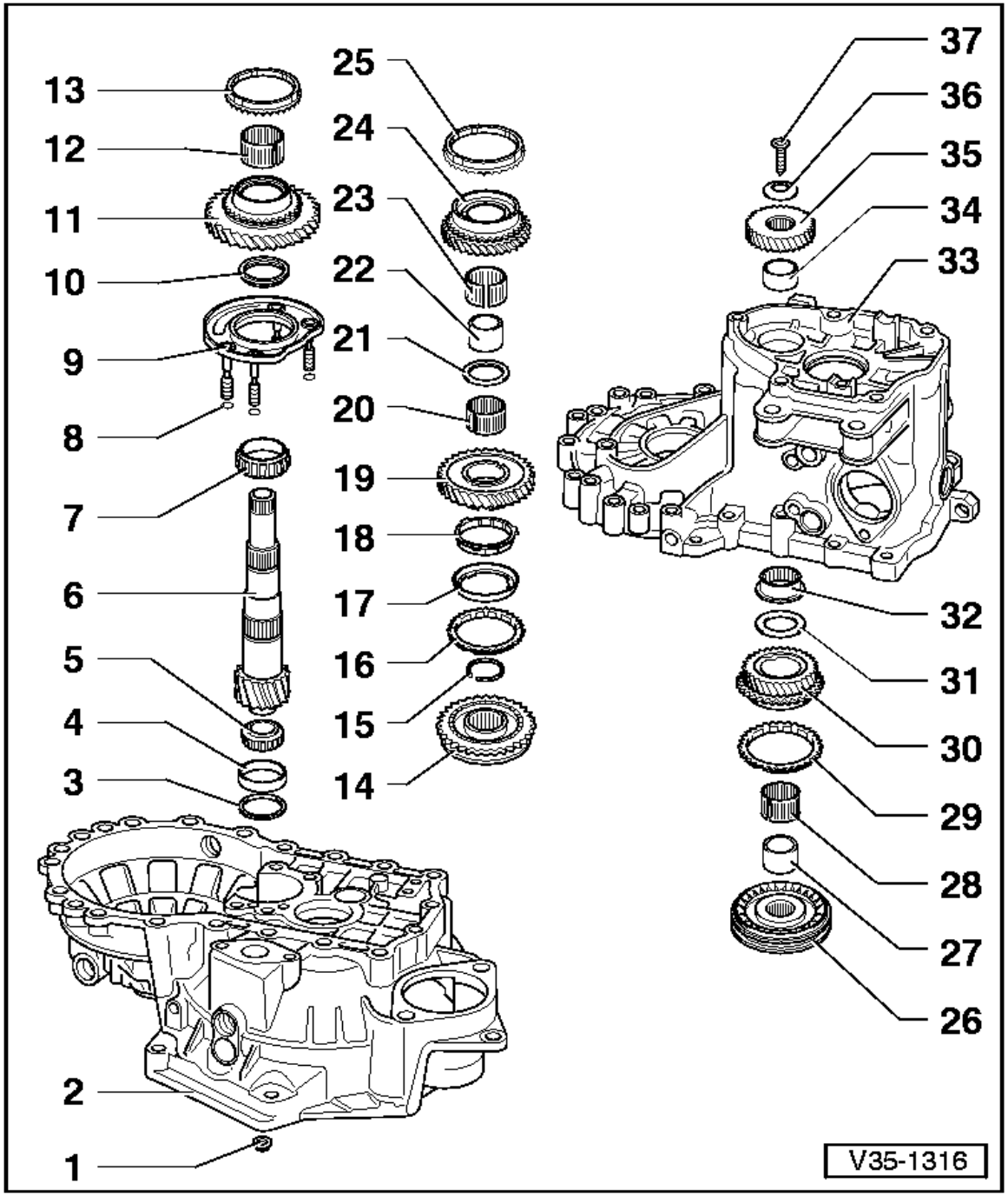

9 - Bearing support
- ◆ With large taper roller bearing outer race and bolts
- ◆ Only change outer race together with large taper roller bearing and bearing support

10 - Thrust washer
- ◆ Shoulder on thrust washer faces taper roller bearing

11 - 1st gear wheel

12 - Needle roller bearing
- ◆ For 1st gear

13 - 1st gear synchro-ring
- ◆ Checking for wear => Fig.9
- ◆ Identification => Fig.14

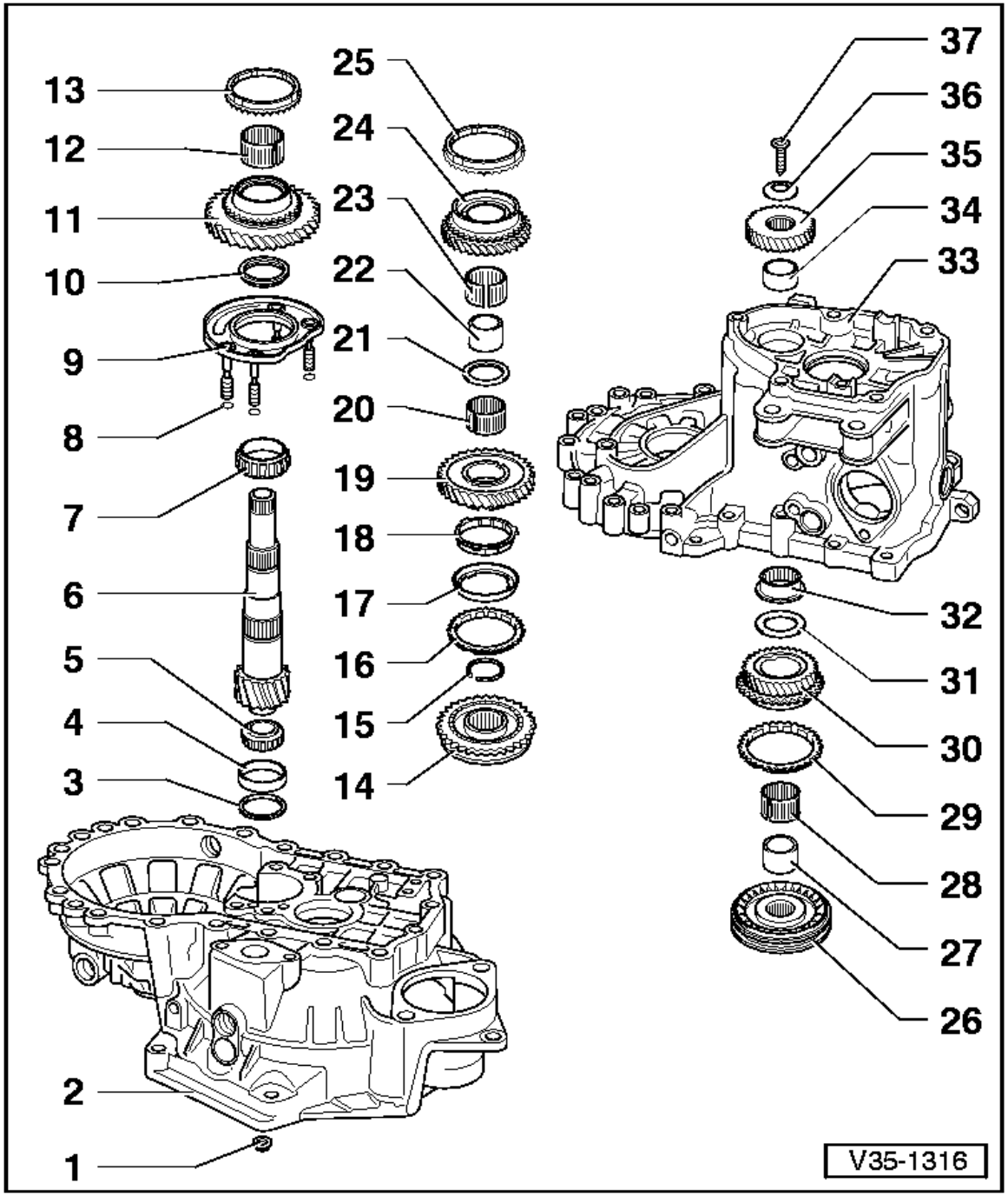

14 - 1st and 2nd gear locking collar with synchro-hub

- Pull off via bearing support after removing the circlip (item15) => Fig.6
- Dismantling => Fig.10
- Assembling locking collar/synchro hub => Fig.10and Fig.11
- Installation position => Fig.12
- Pressing on => Fig.13

15 - Circlip

16 - 2nd gear synchro-ring

- Identification => Fig.14
- Checking for wear => Fig.16
- Assemble so that the recesses locate in the locking collar (item14) locking pieces

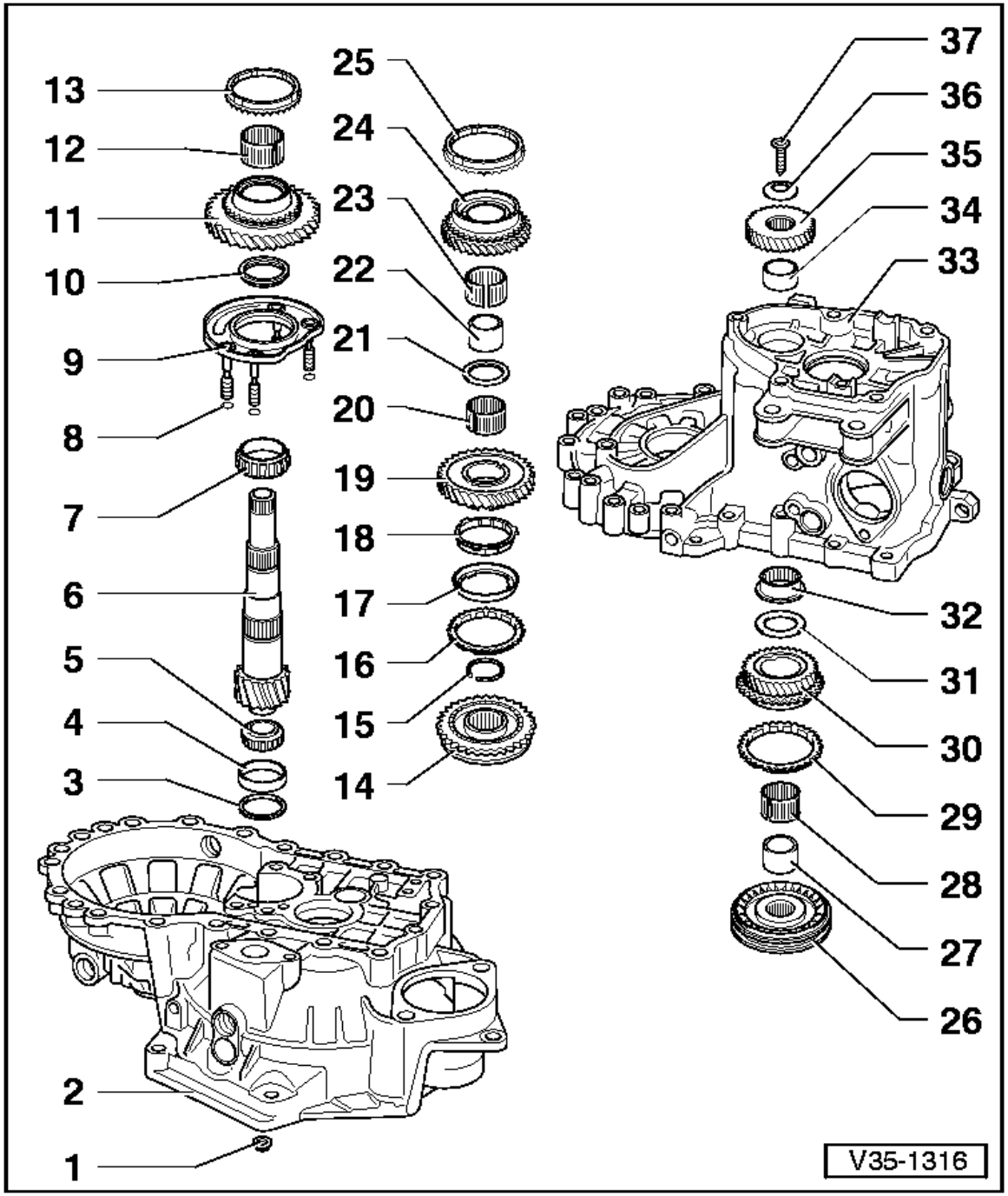

17 - Outer ring
- ◆ Insert in the synchro-ring (item16), installation position => Fig.17
- ◆ Renew if scored

18 - Synchro-ring
- ◆ (Inner ring)
- ◆ Checking for wear => Fig.18
- ◆ Check lugs for scoring
- ◆ Installation position => Fig.19

19 - 2nd gear wheel
- ◆ Installation position => Fig.20

20 - Needle roller bearing
- ◆ For 2nd gear

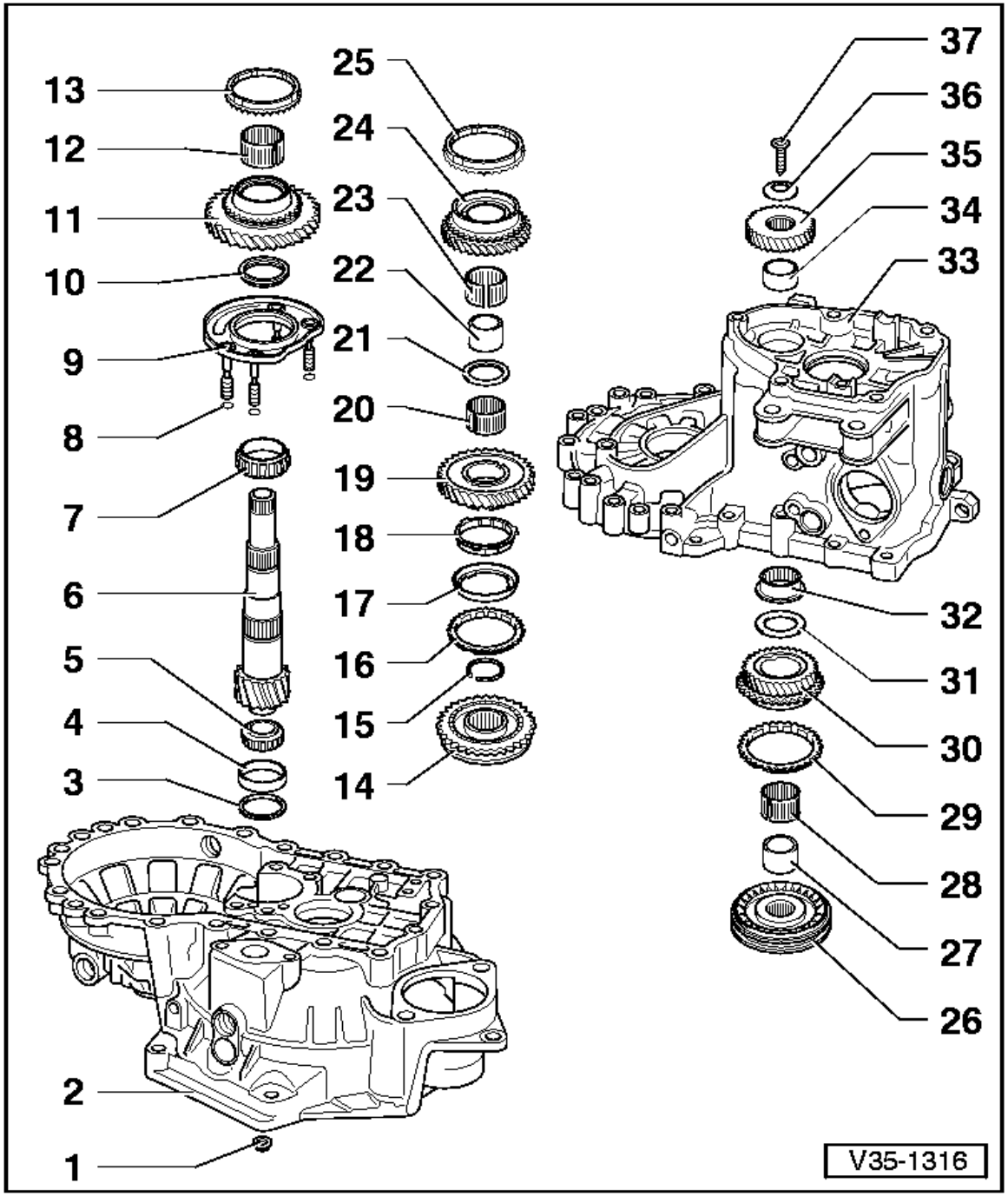

21 - Thrust washer

22 - Sleeve for 3rd gear needle roller bearing
- ◆ Pressing off with 2nd gear wheel
  => Fig.5
- ◆ Pressing on => Fig.21

23 - Needle roller bearing
- ◆ For 3rd gear

24 - 3rd gear wheel

25 - 3rd gear synchro-ring
- ◆ Checking for wear
  => Fig.9

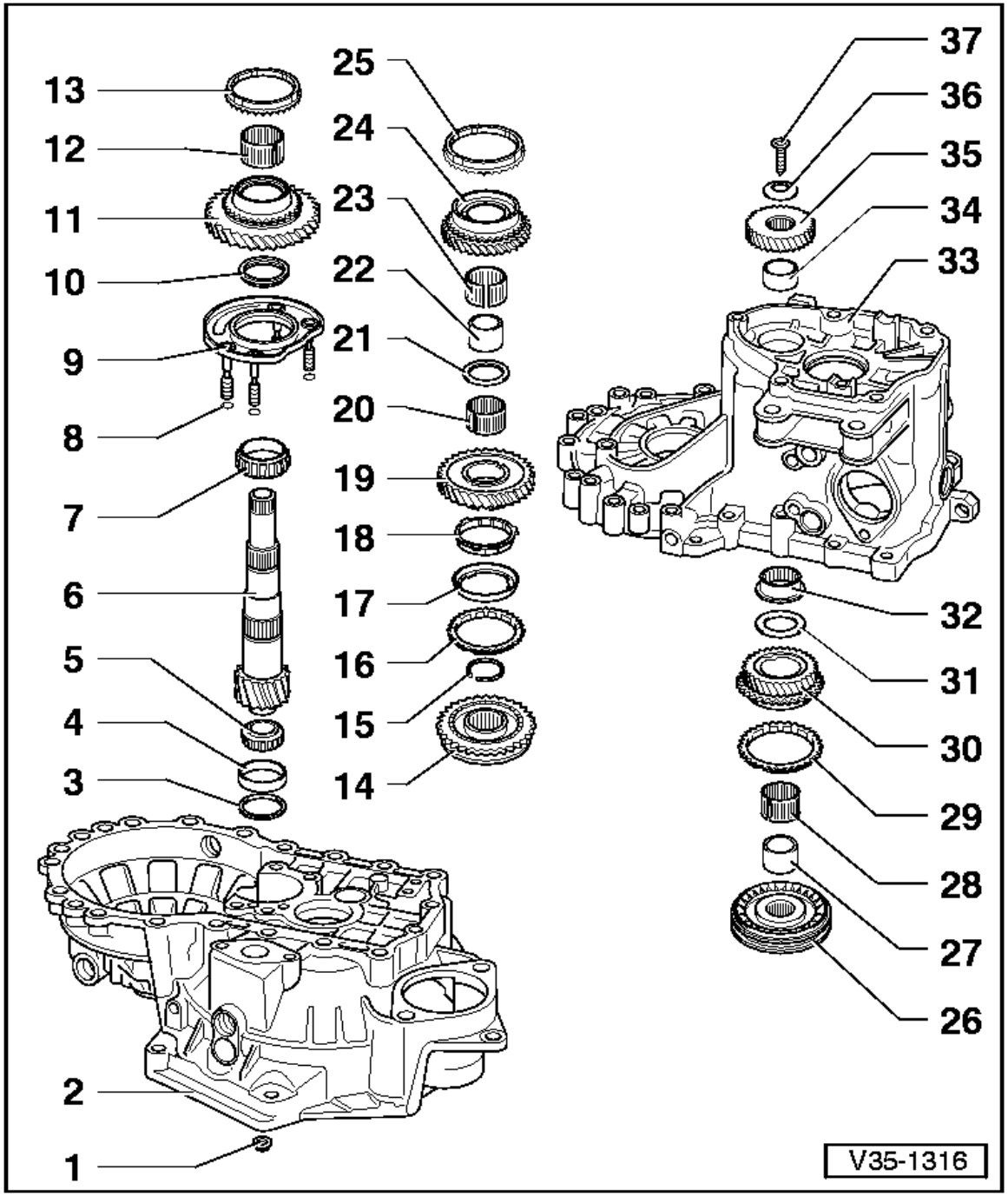

26 - Locking collar with 3rd and 4th gear synchro-hub

- ◆ Press off with 2nd gear wheel (item 19) and 3rd gear wheel (item 24) => Fig.5
- ◆ Dismantling => Fig.22
- ◆ Installation position locking collar/synchro-hub => Fig.24
- ◆ Assembling locking collar/synchro-hub => Fig.22and Fig.23
- ◆ Pressing on => Fig.25

27 - Sleeve

- ◆ For needle roller bearing
- ◆ Press off with locking collar and 3rd and 4th gear synchro -hub (item 26) => Fig.5
- ◆ Pressing on => Fig.26

28 - Needle roller bearing

- ◆ For 4th gear

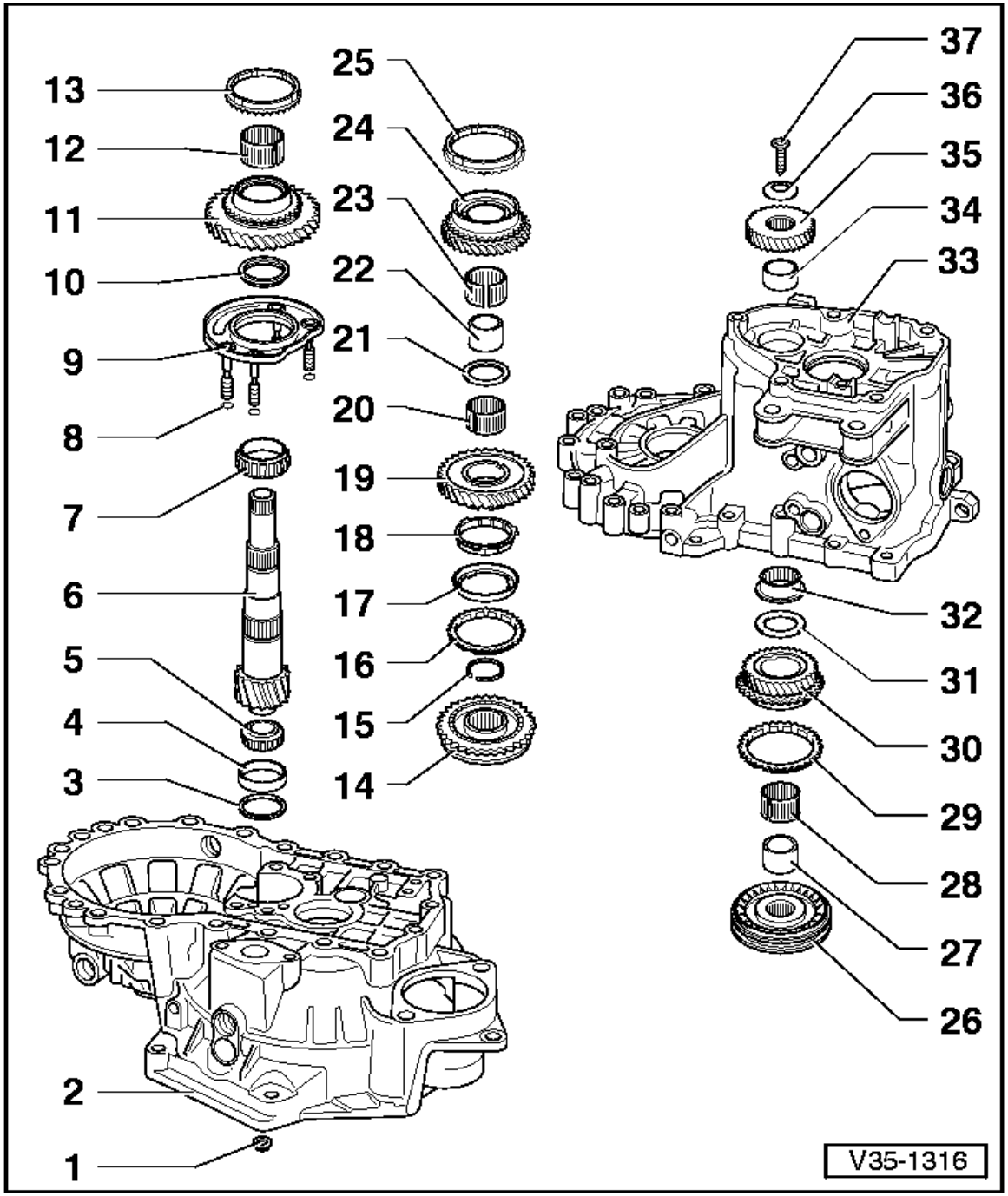

29 - 4th gear synchro-ring
- ◆ Checking for wear
  => Fig.9

30 - 4th gear wheel

31 - Thrust washer

32 - Needle roller bearing
- ◆ For output shaft
- ◆ Removing and installing
  => Page 34-114

33 - Gearbox housing

34 - Sleeve
- ◆ For output shaft needle roller bearing
- ◆ Pressing off => Fig.5
- ◆ Pressing on => Fig.27

35 - 5th gear wheel
- ◆ Removing and installing
  => from Page 34-89

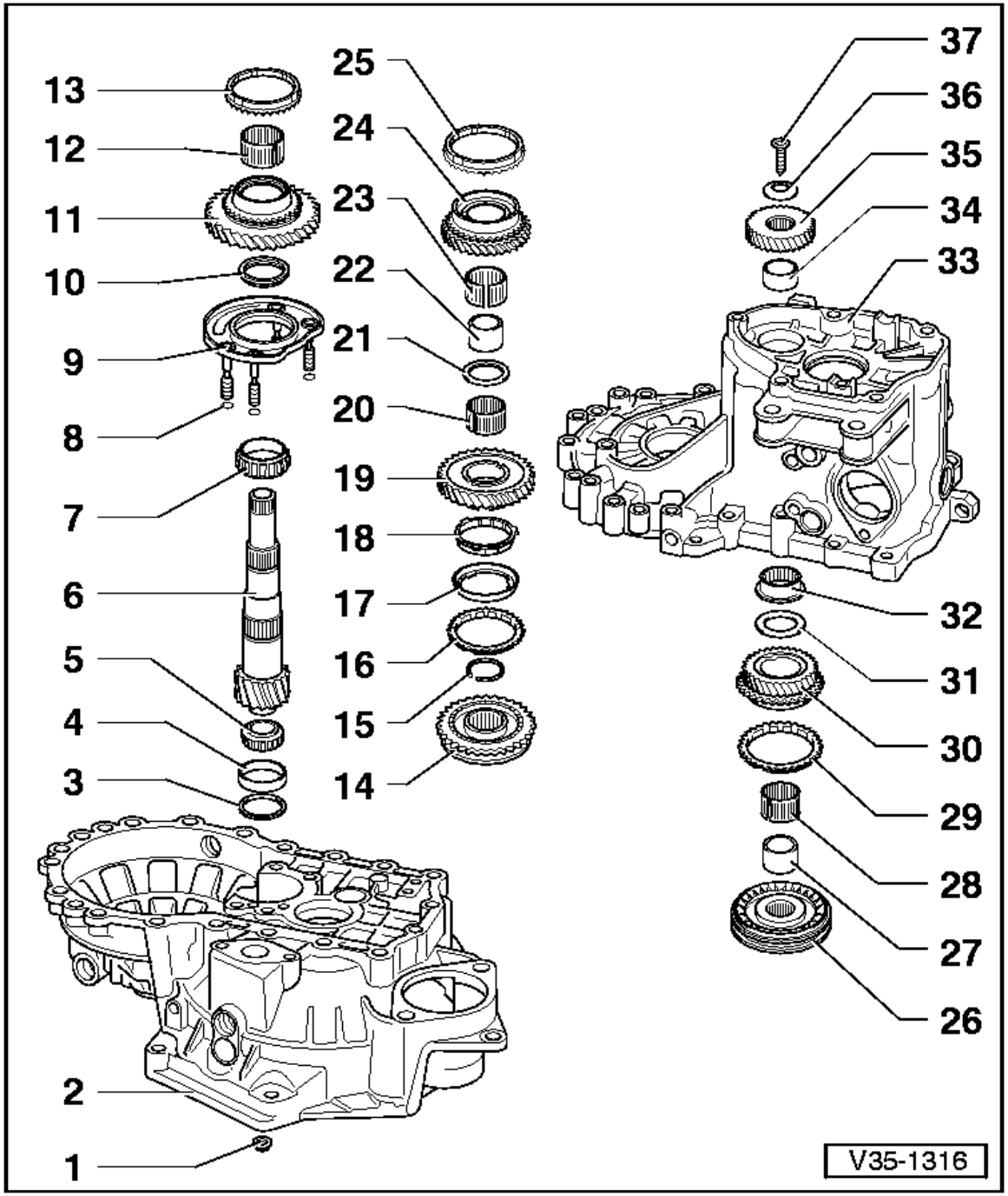

36 - Saucer spring washer

◆ Installation position => Page 34-105

37 - Torx socket head bolt M10, 80 Nm

◆ Fitted portion on bolt head holds saucer spring washer in position

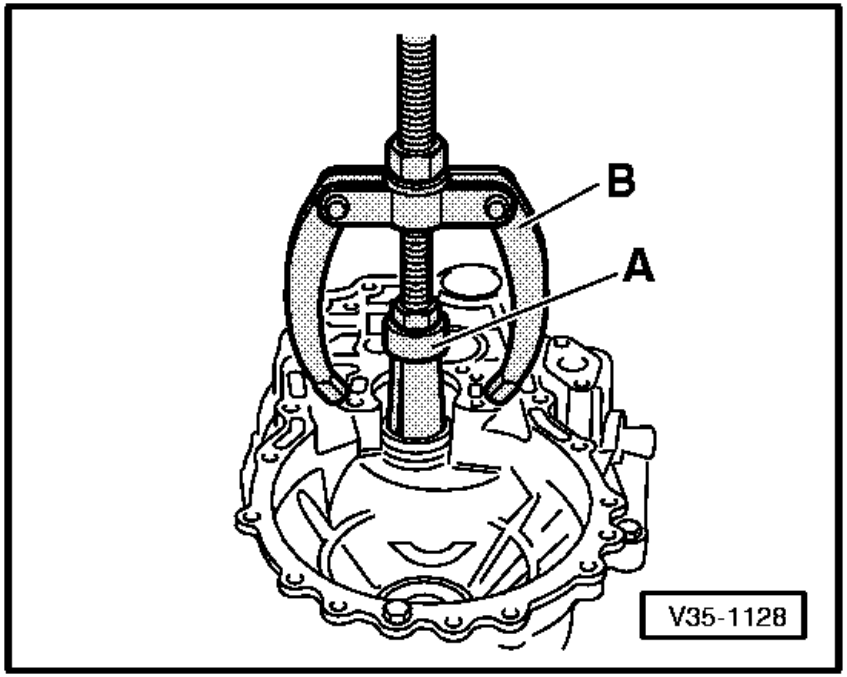

⇦ **Fig.1Pulling out small taper roller bearing outer race**

A - Internal extractor 37 ... 46 mm, e.g. Kukko 21/6

B - Counter support, e.g. Kukko 22/2

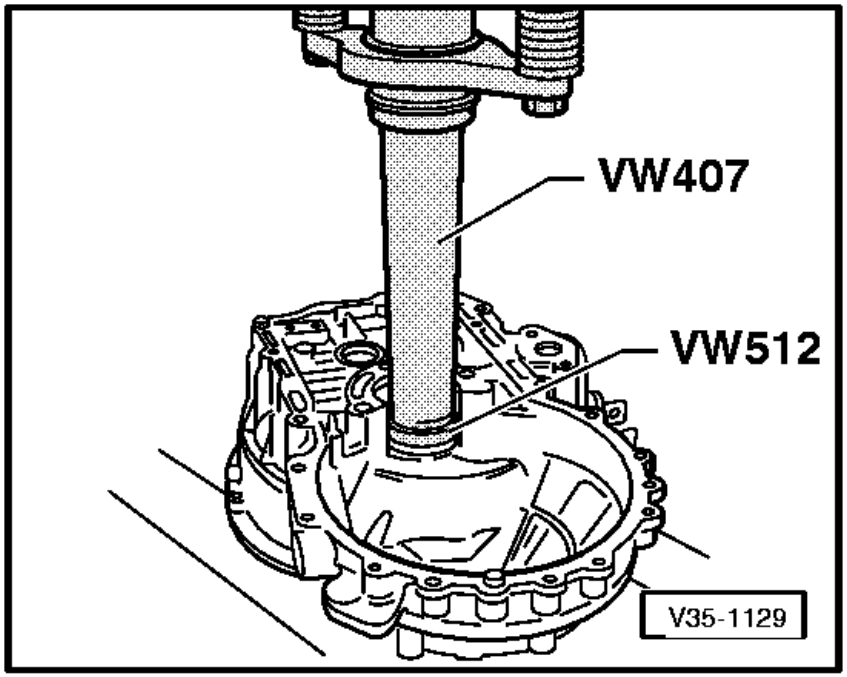

⇦ **Fig.2Pressing in small taper roller bearing outer race**

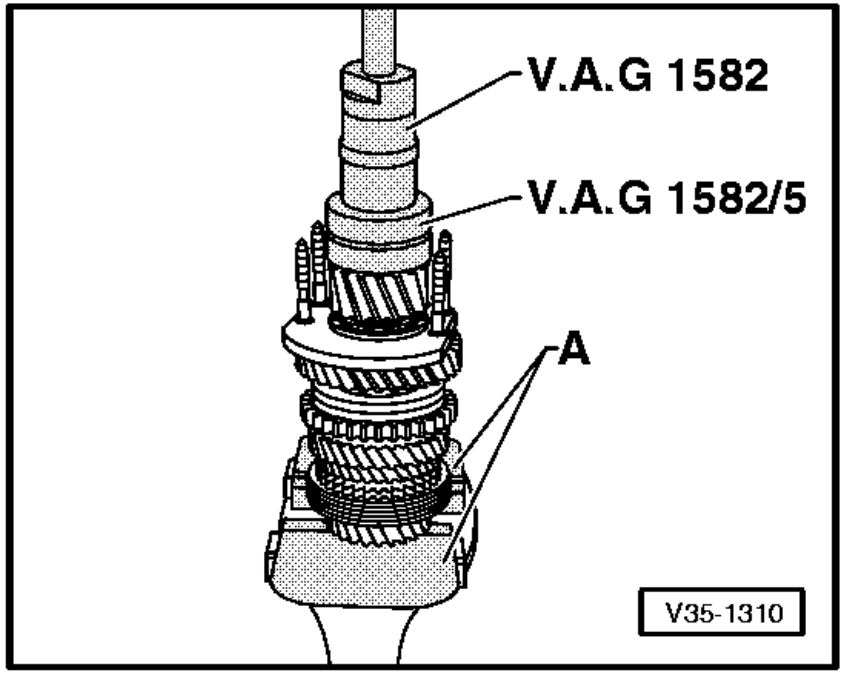

⇦ **Fig.3Pulling off small taper roller bearing inner race**

A - Vice clamps/vice

- Fit gripping device and tension behind bearing rollers, then turn bearing and retension gripping device.

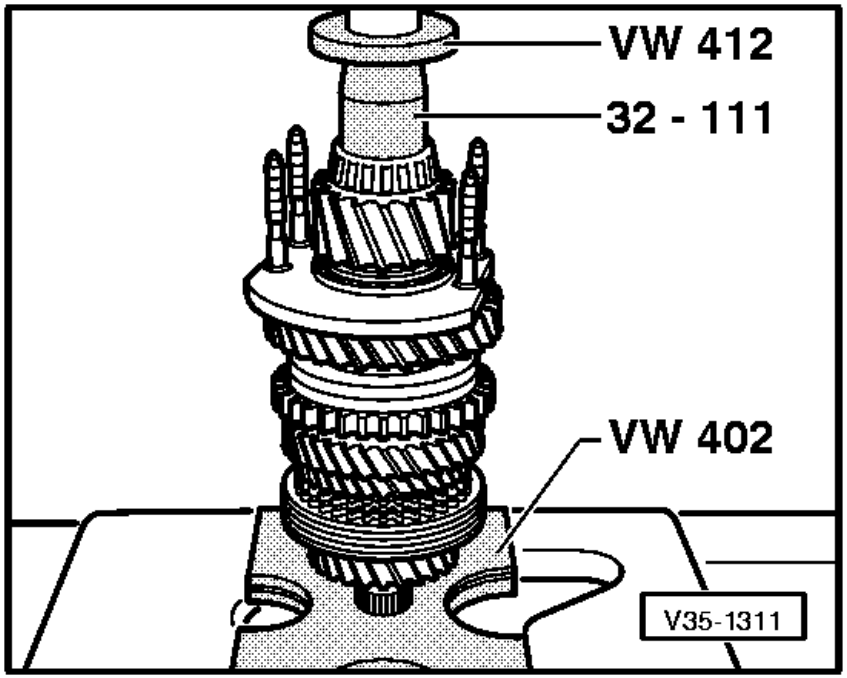

⇦ **Fig.4Pressing on small taper roller bearing inner race**

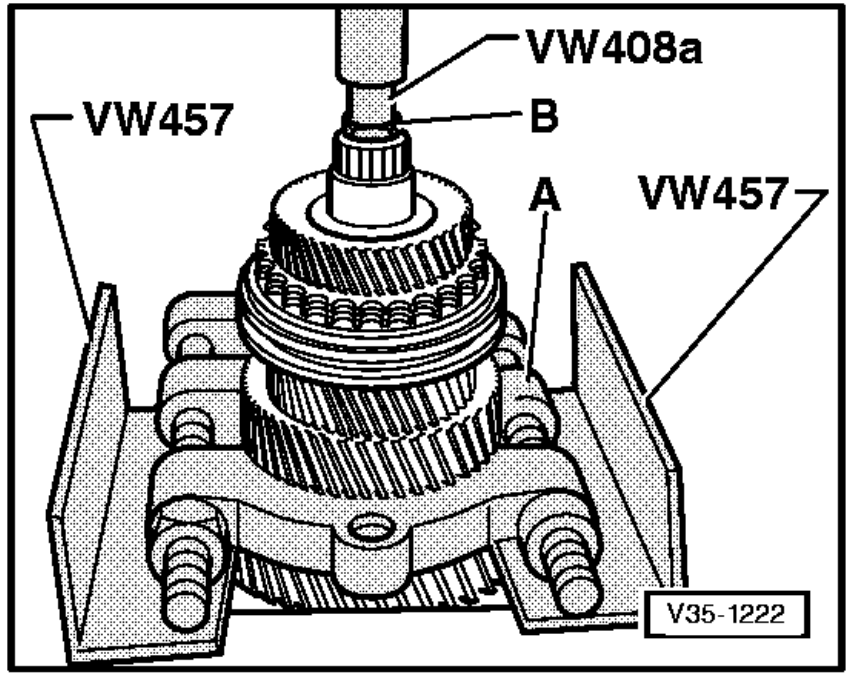

⇦ **Fig.5Pressing off 3rd and 4th gear synchro-hub/locking collar, 2nd, 3rd and 4th gear wheels with gearbox housing needle roller bearing sleeve**

A - Separating device 22 ... 115 mm, e.g. Kukko 17/2

B - Hexagon bolt 17 mm AF - M10 x 20

Note:

Support separating appliance so that the 1st and 2nd gear locking collar is not pulled off at the same time.

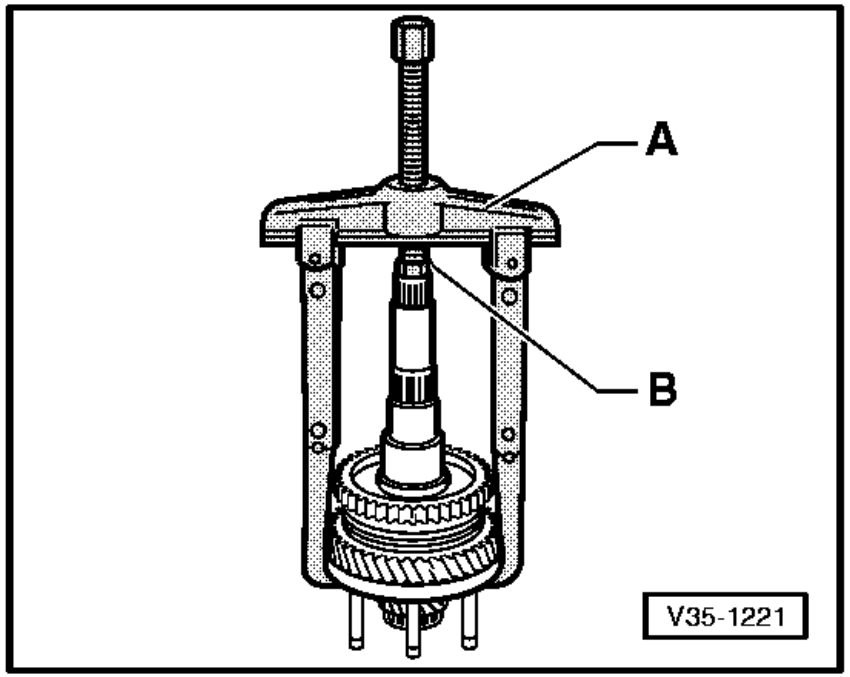

⇦ **Fig.6Pulling off locking collar with synchro-hub via bearing support**

A - Two-arm puller, e.g. Kukko 20/10 with
250 mm reach hooks

B - Hexagon bolt 17 mm AF - M10 x 20

Note:

Remove circlip before pulling off individual components.

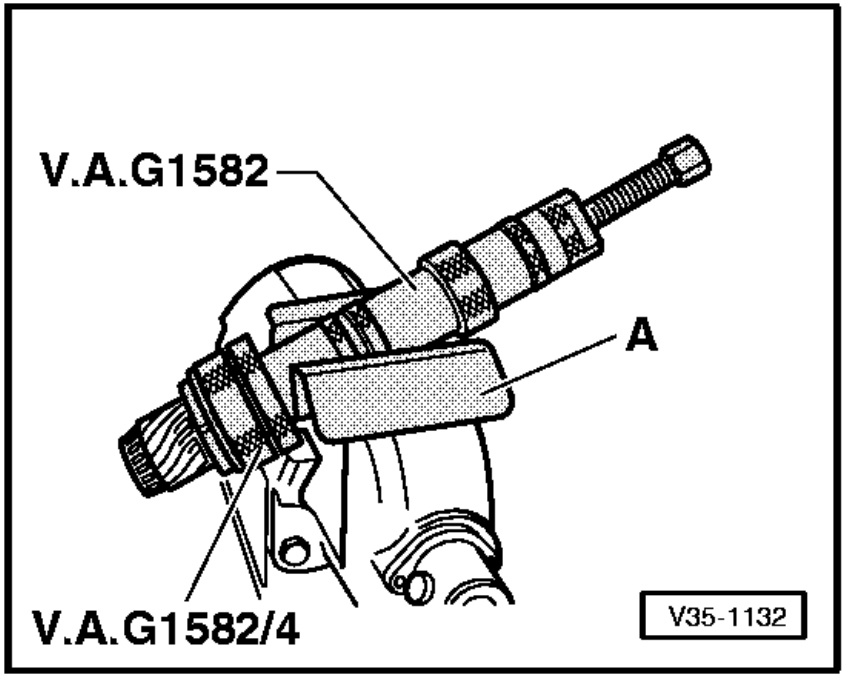

⇦ **Fig.7Pulling off large taper roller bearing inner race**

A - Vice clamps

- Before fitting puller insert a M 10 x 20 hexagon bolt in the output shaft drilling.

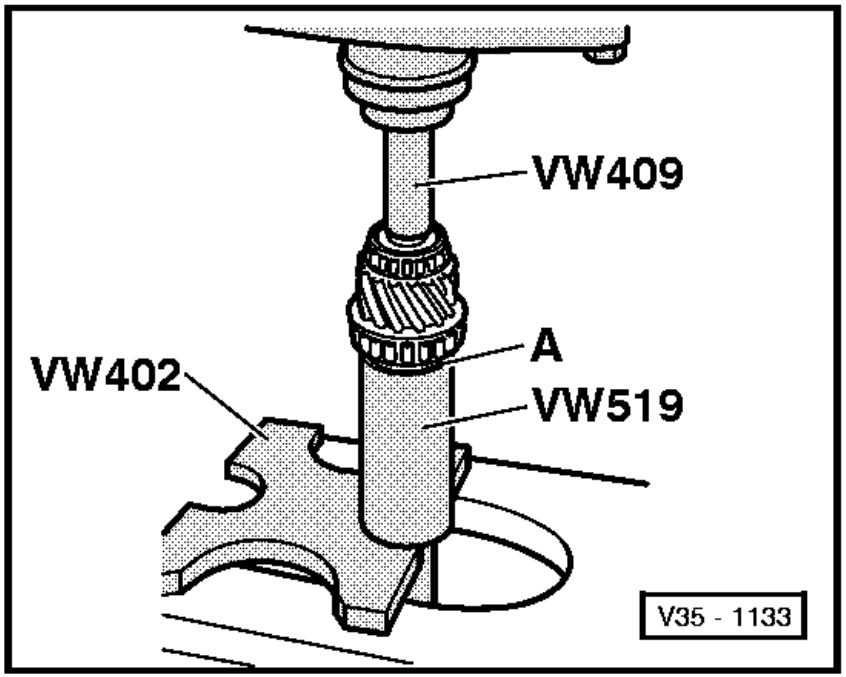

⇦ **Fig.8Pressing on large taper roller bearing inner race**

A - Thrust washer

- Fit thrust washer before pressing on the inner race. The shoulder faces the inner race.

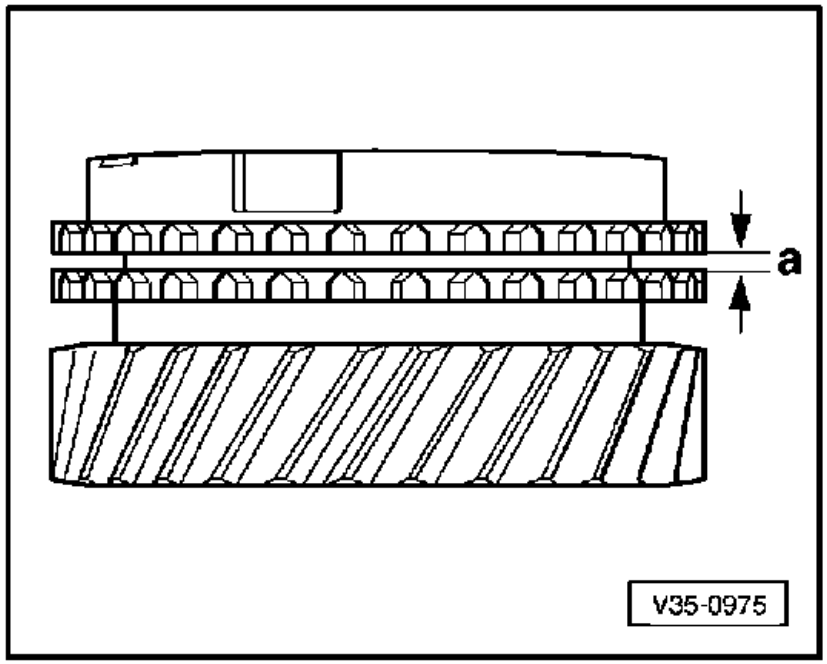

⇦ **Fig.9Checking synchro-ring for wear**

- Press synchro-ring onto the gear wheel cone and measure gap "a" with feeler gauge.

Gap "a"	New dimension	Wear limit
1st gear 3rd gear 4th gear	1.0 ... 1.7 mm 1.0 ... 1.7 mm 1.0 ... 1.7 mm	0.5 mm

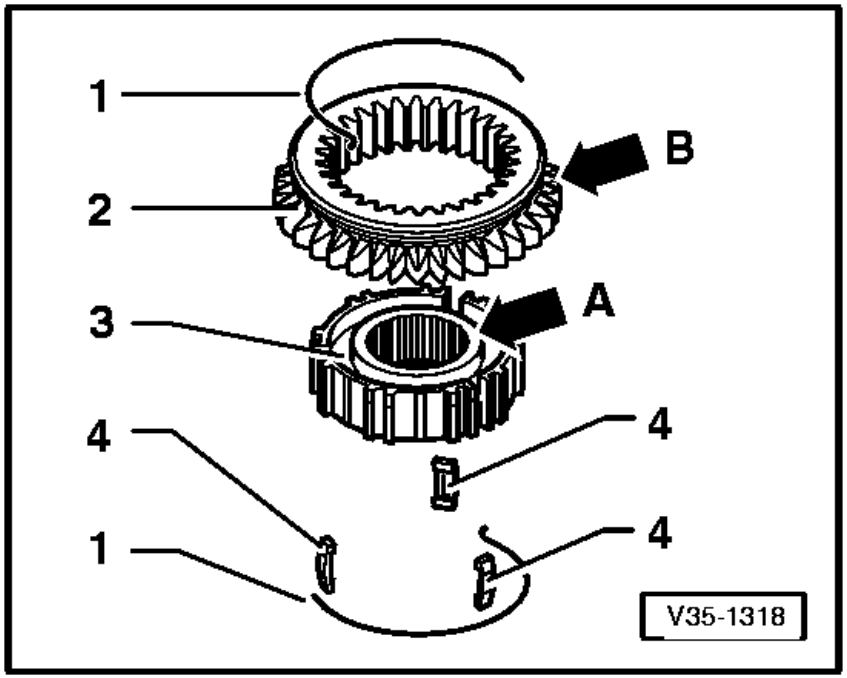

⇦ **Fig.10Dismantling and assembling 1st and 2nd gear locking collar and synchro-hub**

1 -Spring

2 -Locking collar

3 -Synchro-hub

4 -Locking piece

- Slide locking collar over synchro-hub.

The wide shoulder of the synchro-hub (arrow A) and the outer splines of the locking collar (arrow B) face opposite directions after assembly. Recesses for locking pieces on synchro -hub and locking collar must align.

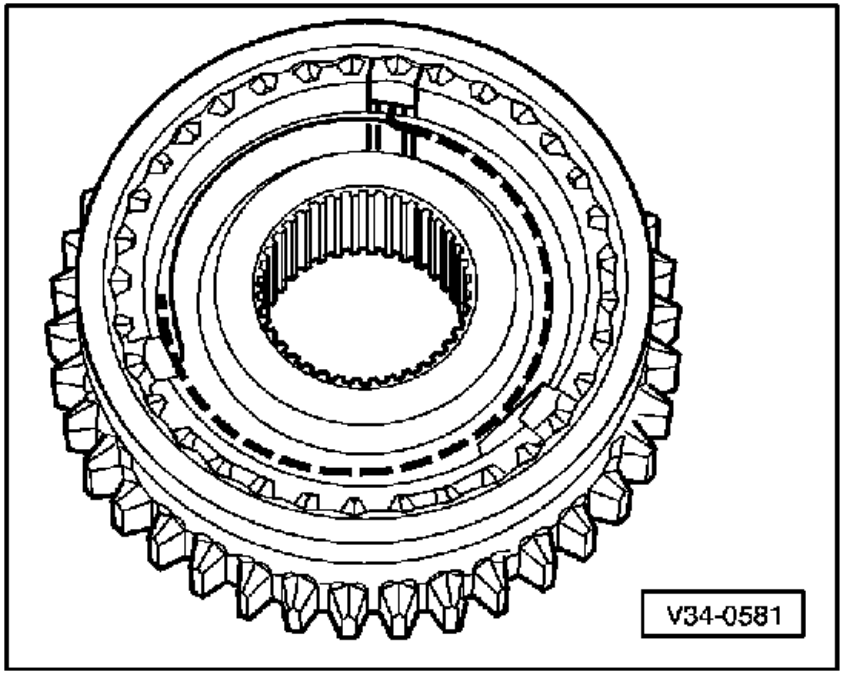

⇦ **Fig.11Assembling 1st and 2nd gear locking collar/synchro-hub**

● Locking collar is pushed over synchro-hub.

- Insert locking pieces and install springs 120° off-set. The angled end of the spring must locate in the hollow locking piece.

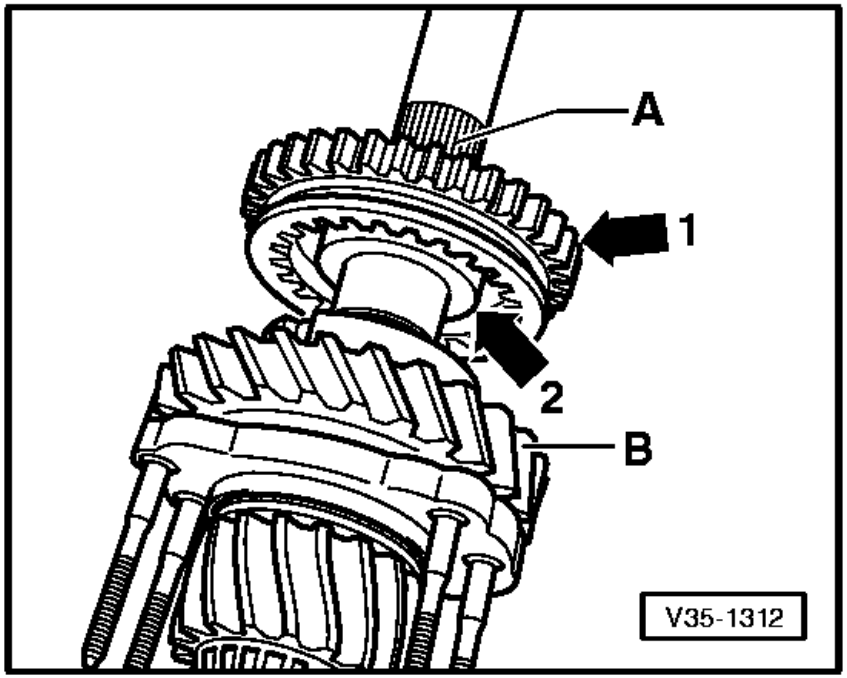

⇦ **Fig.12Installation position 1st and 2nd gear locking collar/synchro-hub**

The locking collar splines (arrow 1) point to splines for 3rd/4th gear synchro-hub -A-.

The wide shoulder of the synchro-hub (arrow 2) then faces to 1st gear -B-.

⇦ **Fig.13Pressing on 1st and 2nd gear locking collar/synchro-hub**

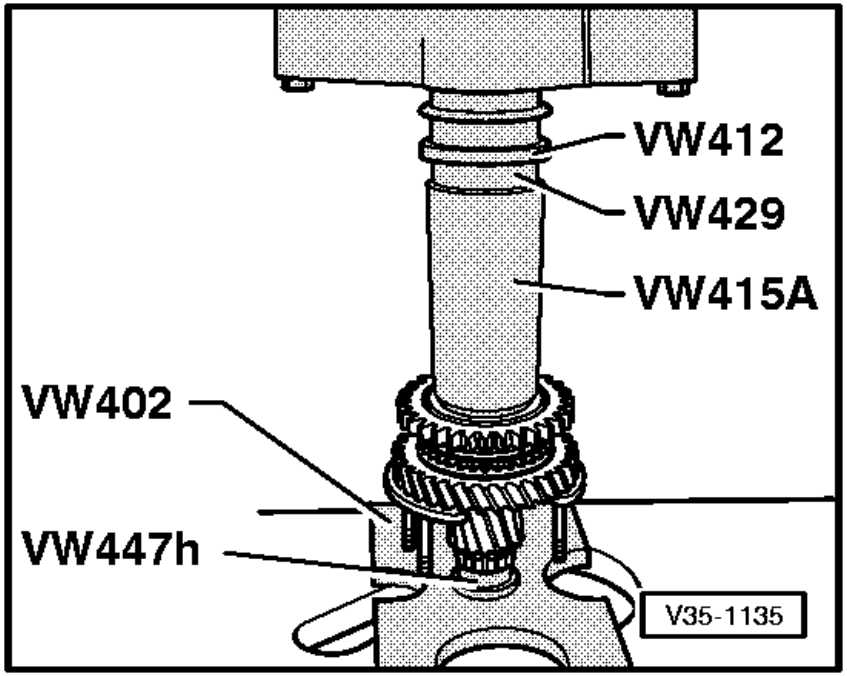

Note:

Before pressing on, place 1st gear synchro-ring on 1st gear wheel.

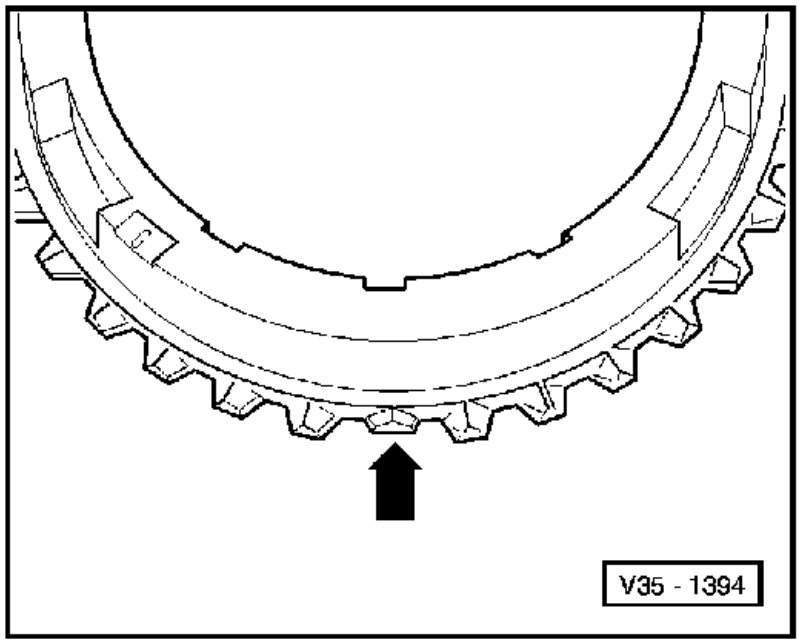

⇦ **Fig.14Identifying 1st and 2nd gear synchro-rings**

- 1st gear synchro-ring - 3 x ground down half teeth (arrow)
- 2nd gear synchro-ring - 3 x ground down half teeth (arrow) or 2 x ground down half teeth

Only the 2nd gear synchro-ring with 2 x ground down half teeth is available as a spare part.

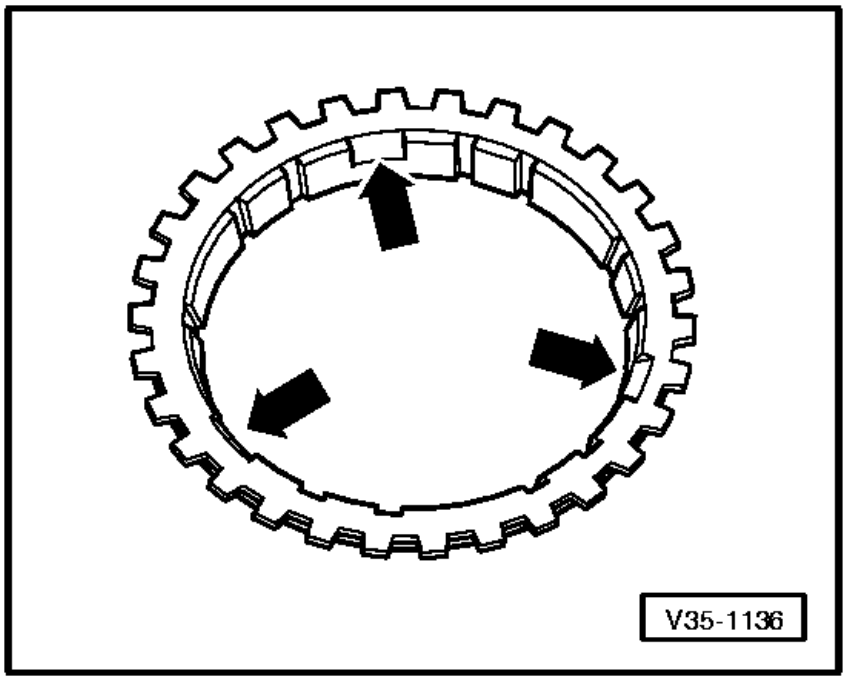

⇦ **Fig.15Distinguishing 1st and 2nd gear synchro-rings**

- ◆ 1st gear synchro-ring - no recesses
- ◆ 2nd gear synchro-ring - three recesses (arrows)

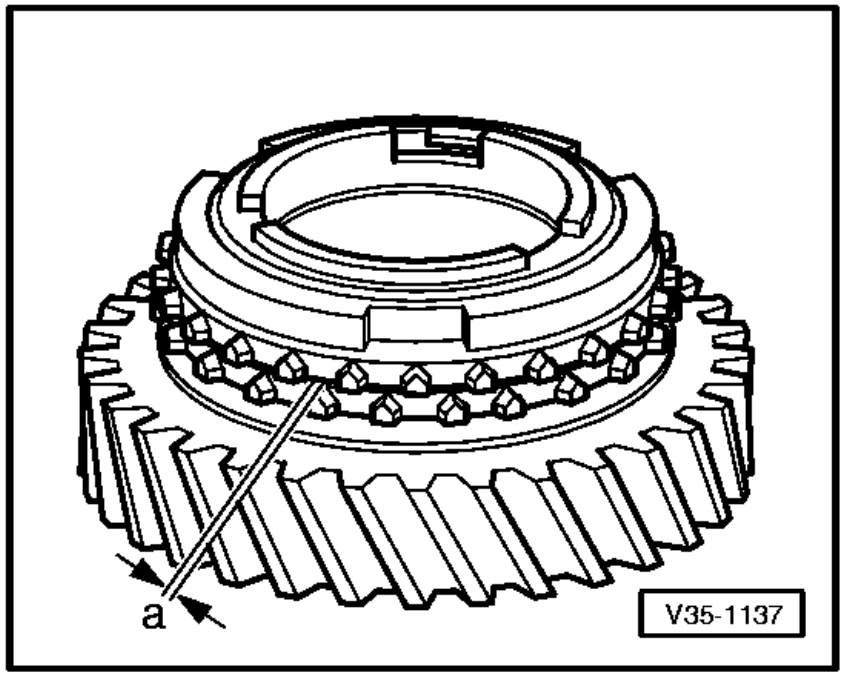

⇦ **Fig.16Checking 2nd gear synchro-ring for wear**

- Press synchro-ring, outer-ring and inner-ring onto gear wheel cone and measure gap "a" with feeler gauge.

Gap "a"	New dimension	Wear limit
2nd gear	1.2 ... 1.8 mm	0.5 mm

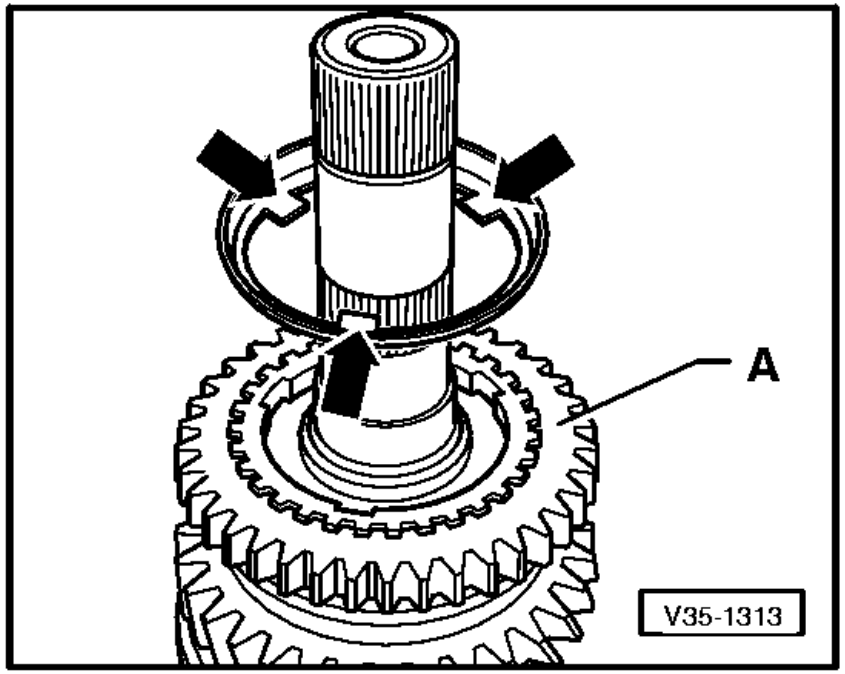

⇦ **Fig.17Installation position outer-ring**

The lugs (arrows) face to 1st gear -A-

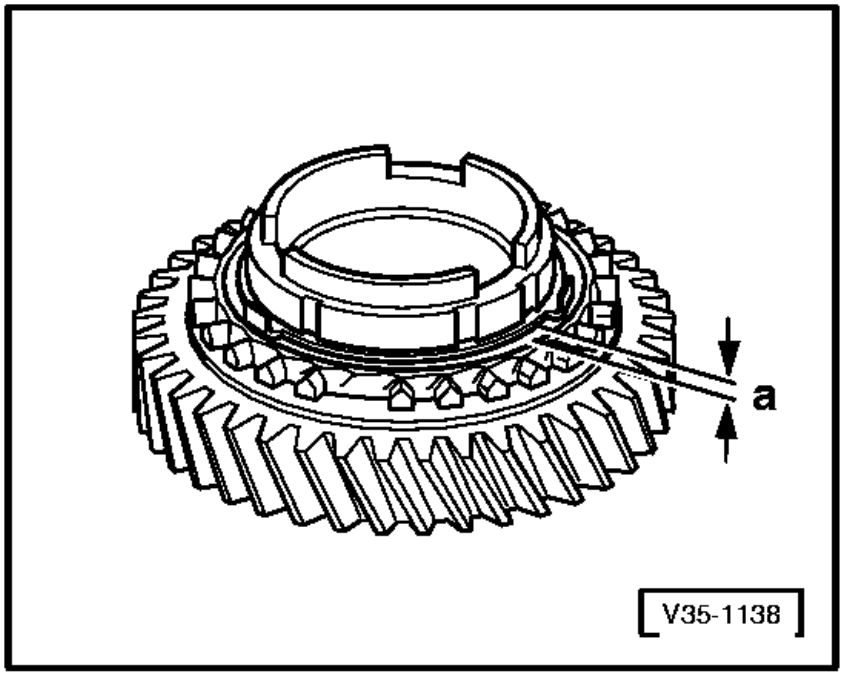

⇦ **Fig.18Checking inner-ring for wear**

- Press inner-ring onto 2nd gear wheel cone and measure gap "a" with a feeler gauge.

Gap "a"	New dimension	Wear limit
2nd gear	0.75 ... 1.25 mm	0.3 mm

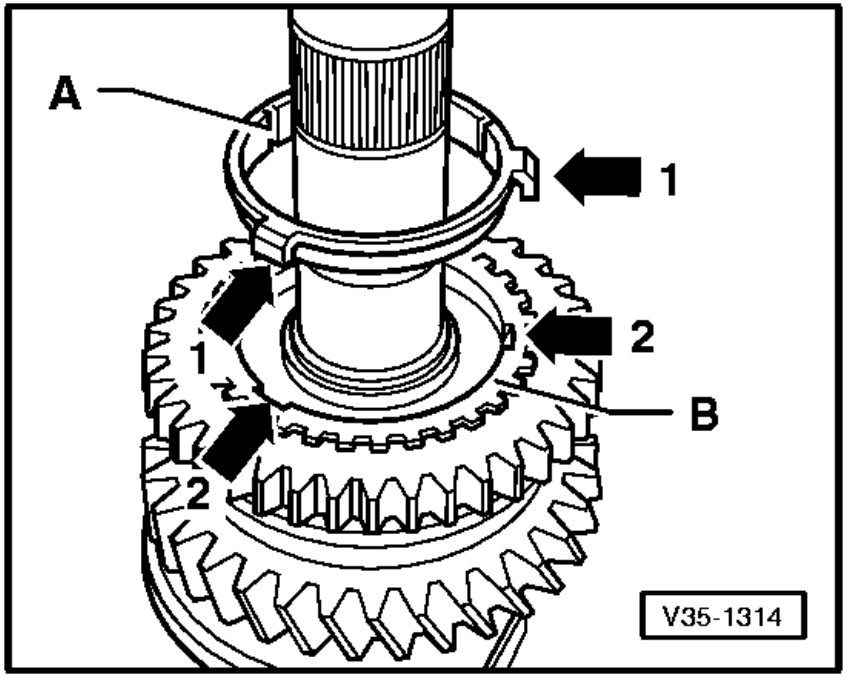

⇦ **Fig.19Installation position synchro-ring (inner-ring) -A-**

The lugs (arrow 1) locate in the recesses (arrow 2) in the synchro-ring -B-.

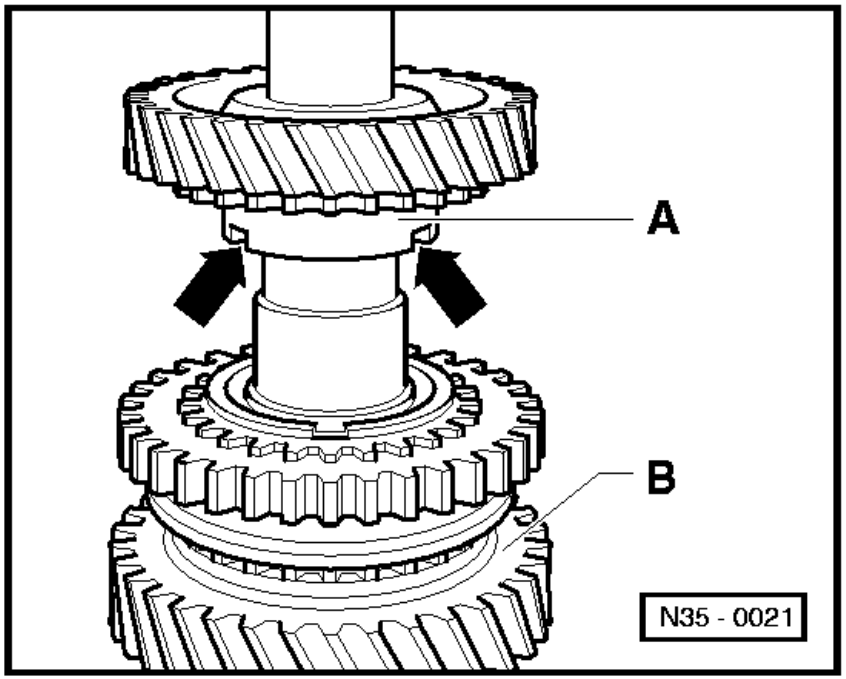

⇦ **Fig.20Installation position 2nd gear wheel**

The higher shoulder -A- faces to 1st gear -B-. The recesses in the shoulder (arrows) locate in the lugs of the outer-ring (arrows => Fig.17)

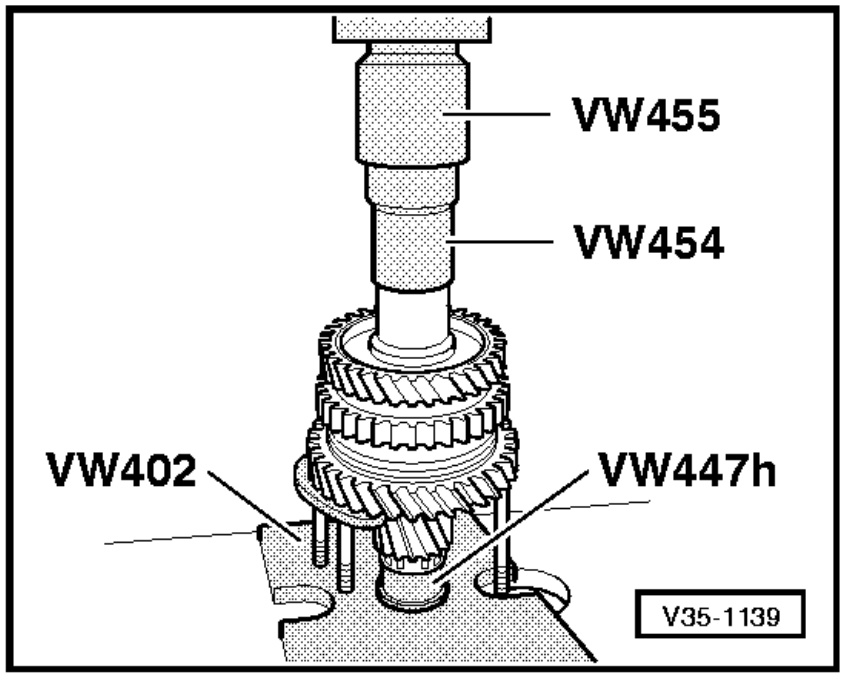

⇦ **Fig.21 Pressing on needle roller bearing sleeve for 3rd gear**

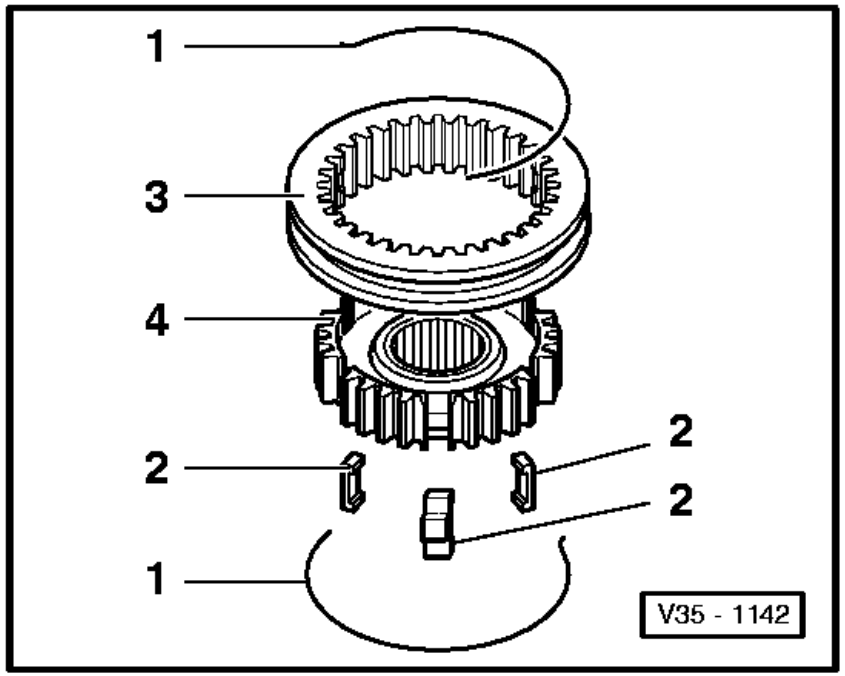

⇦ **Fig.22Dismantling and assembling 3rd and 4th gear locking collar and synchro-hub**

1 -Spring

2 -Locking piece

3 -Locking collar

4 -Synchro-hub

- Slide locking collar over synchro-hub.

The recesses for locking pieces in synchro-hub and locking collar must align.

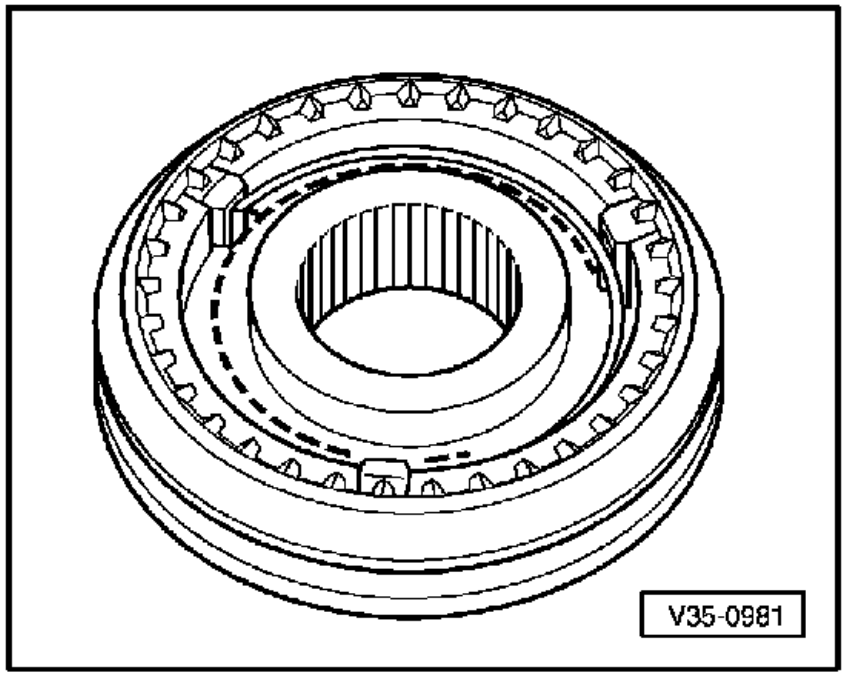

⇦ **Fig.23Assembling 3rd and 4th gear locking collar/synchro-hub**

The locking collar has been pushed over the synchro-hub.

- Insert locking pieces and install springs 120° off-set. The angled end of the spring must locate in the hollow locking piece.

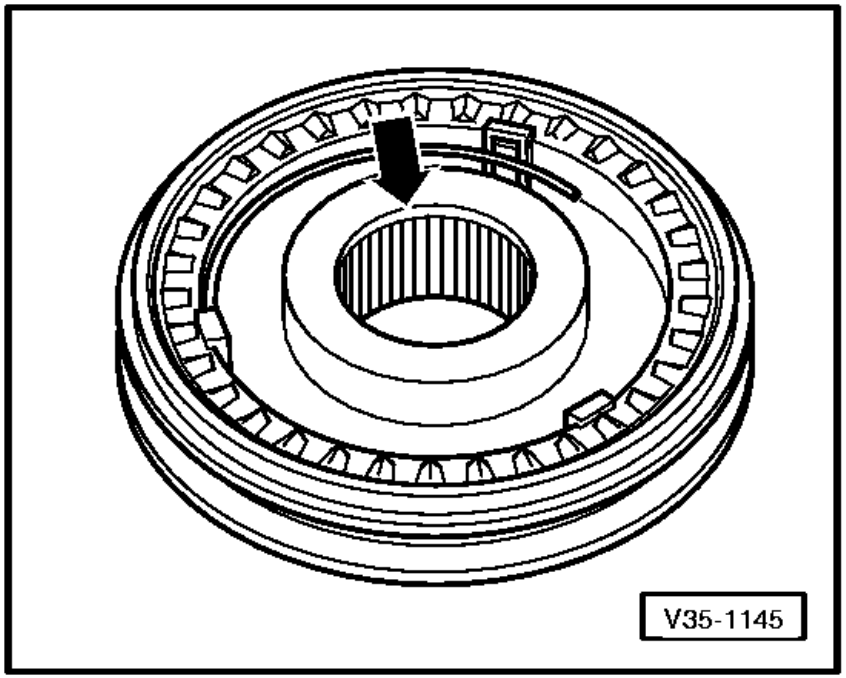

⇦ **Fig.24Installation position 3rd and 4th gear locking collar/synchro-hub**

Chamfer (arrow) faces to 4th gear.

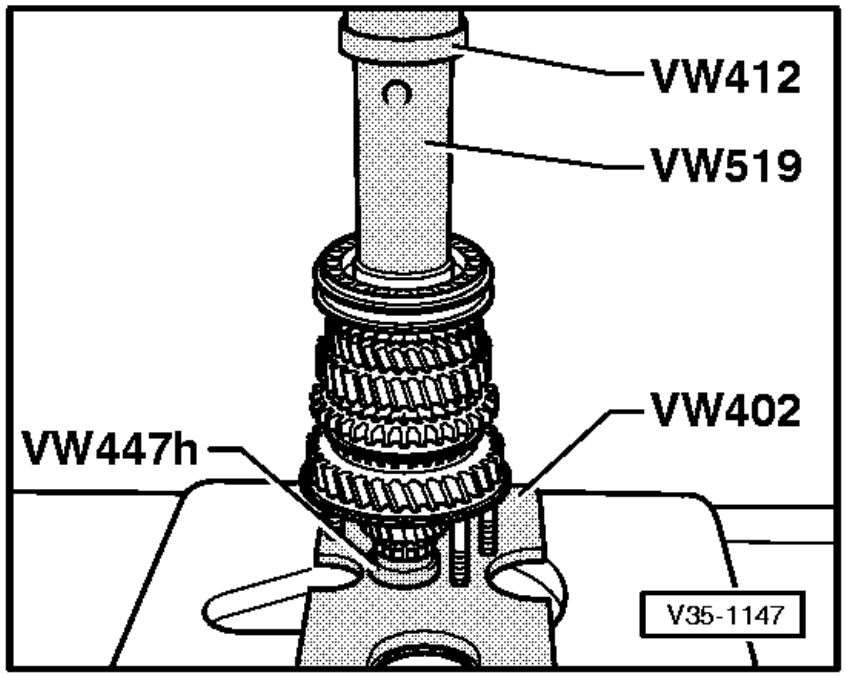

⇦ **Fig.25Pressing on 3rd and 4th gear synchro-hub with locking collar** -

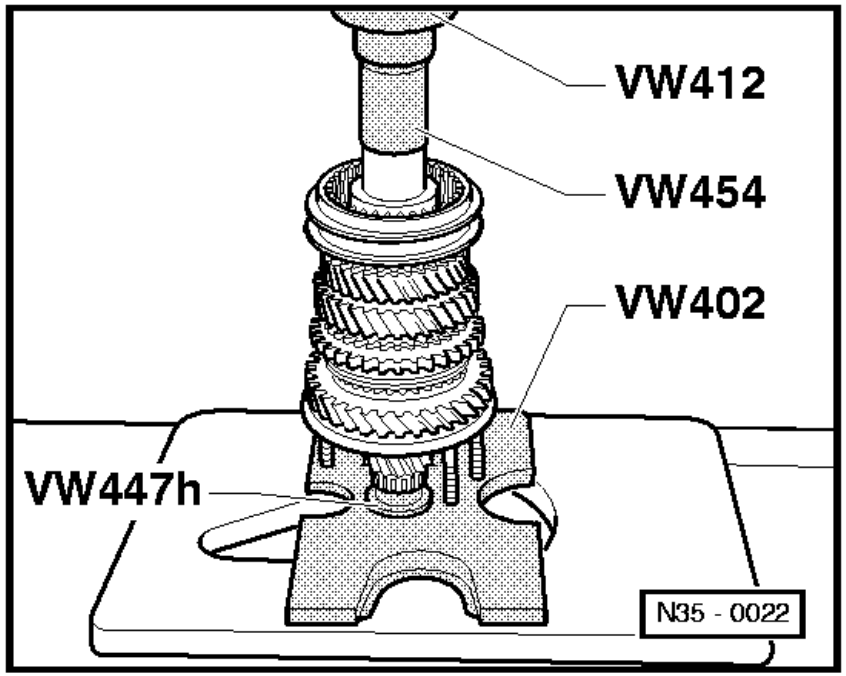

⇦ **Fig.26Pressing on sleeve for 4th gear needle roller bearing**

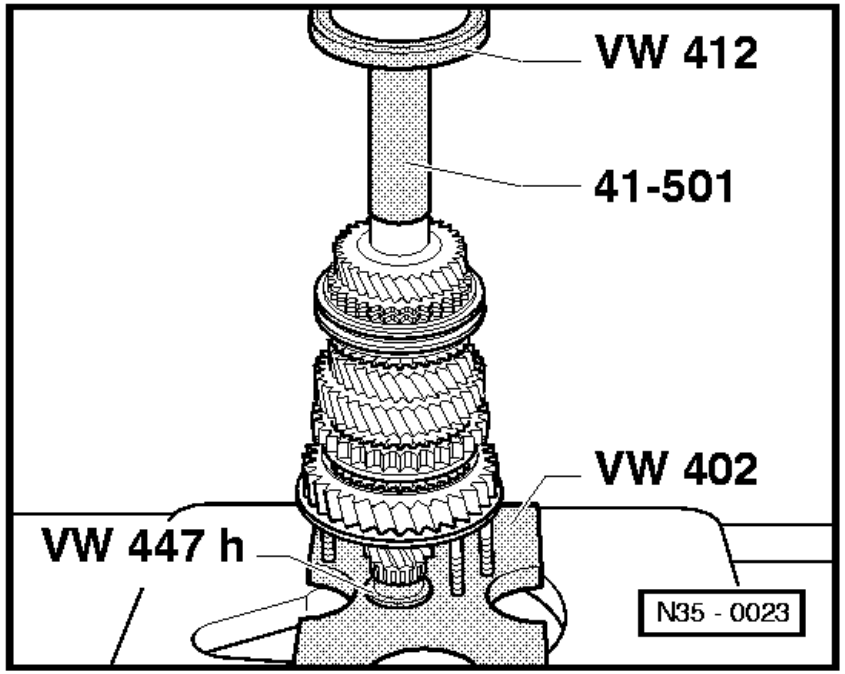

⇦ **Fig.27Pressing on sleeve for output shaft needle roller bearing**