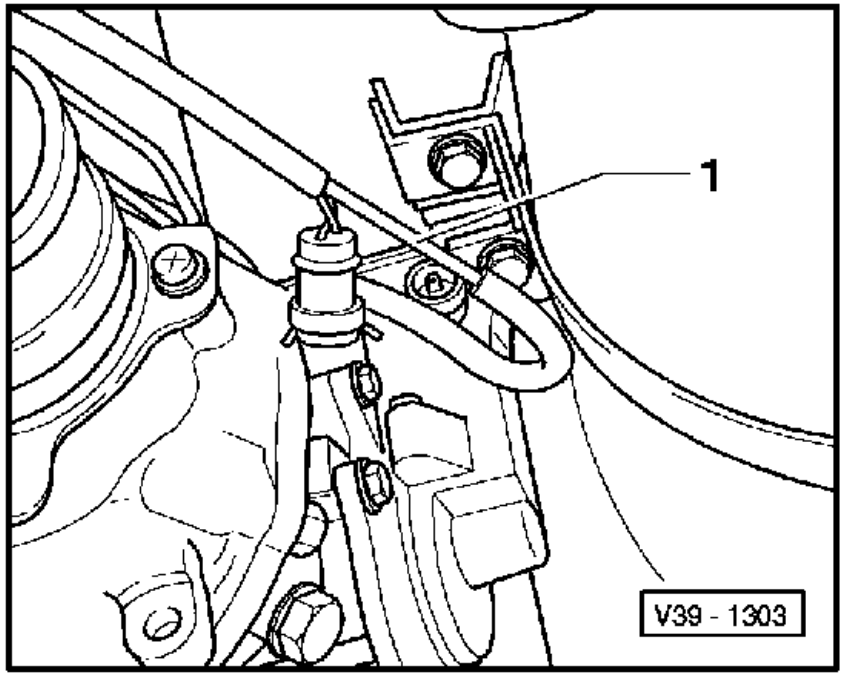

Removing

⇦ - Pull vent pipe -1- out of wiring loom insulation sleeve.

- Pull connector off positioning element.

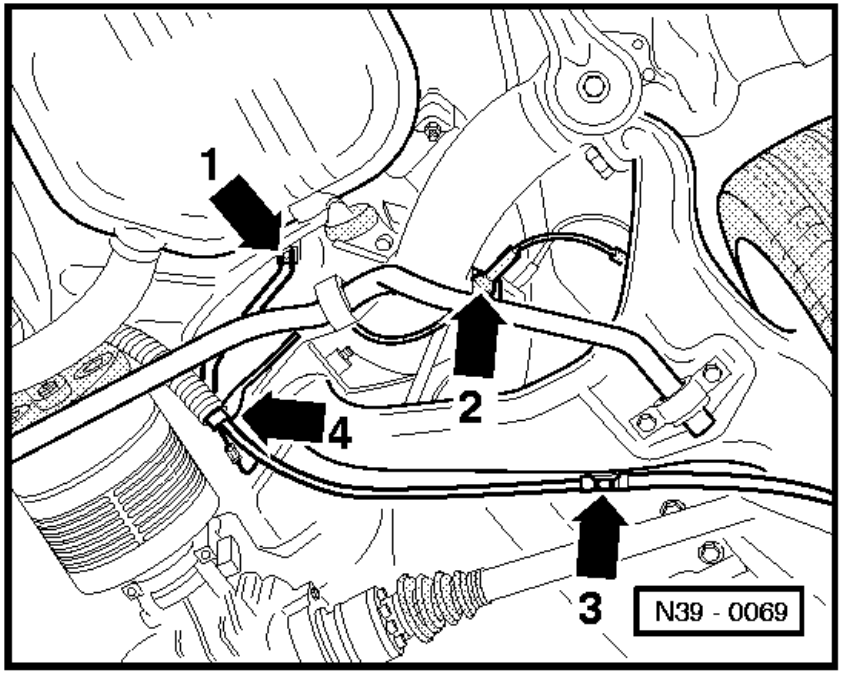

⇦ - Release brake pipe from vehicle floor clip (arrow 1).

- Pull ABS sensor wiring from its retainer (arrow 2).

- Unhook hand brake cables from retainers (arrow 3 and arrow 4).

- Unhook exhaust system from axle.

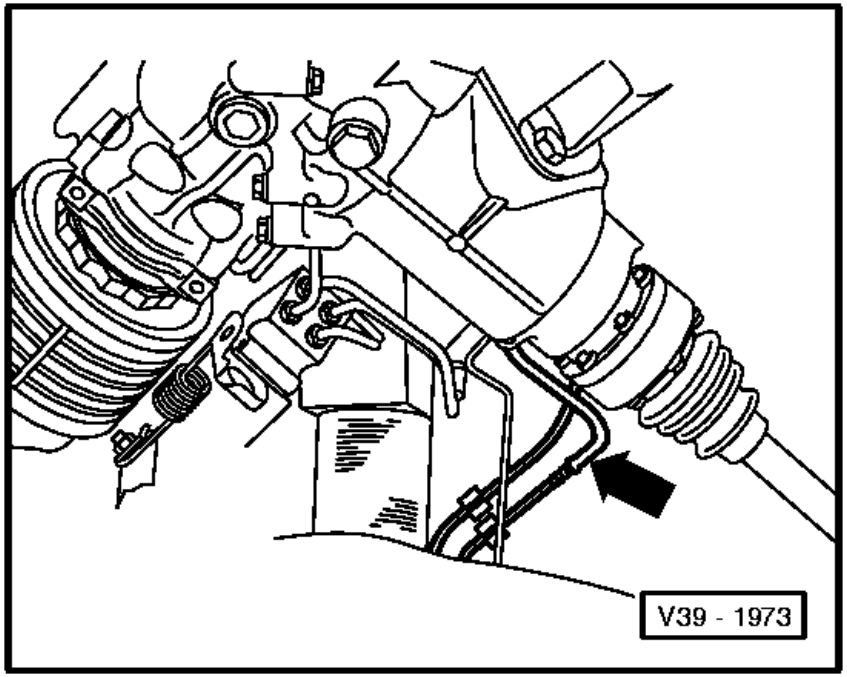

⇦ - Pull off vacuum hose (arrow).

- Separate propshaft from viscous coupling flange.

- Separate drive shafts from final drive flange.

- Remove rear wheels.

- Place gearbox jack V.A.G 1383 A under final drive and support final drive.

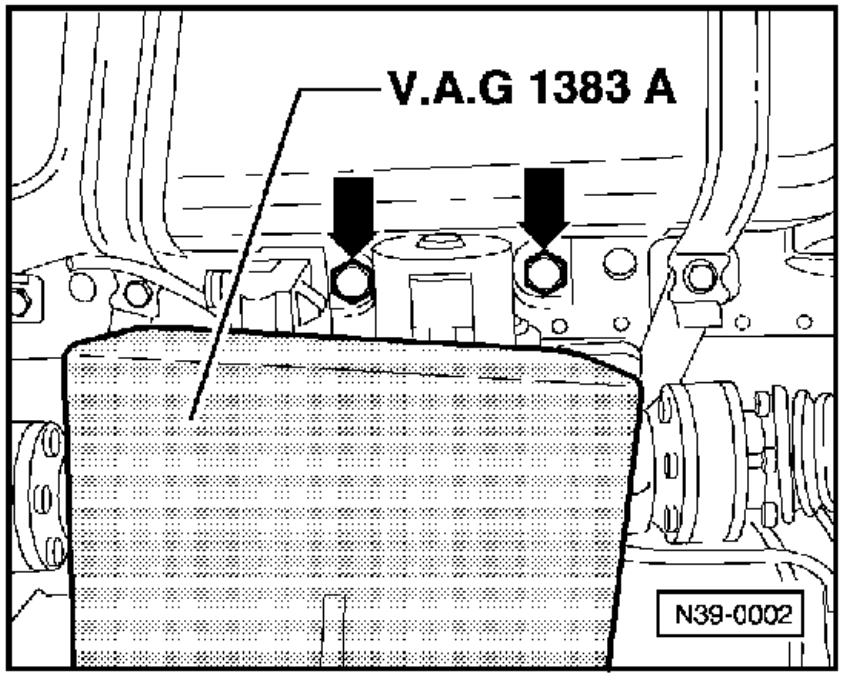

⇦ - Remove bolts securing final drive mounting bracket to cross member (arrows).

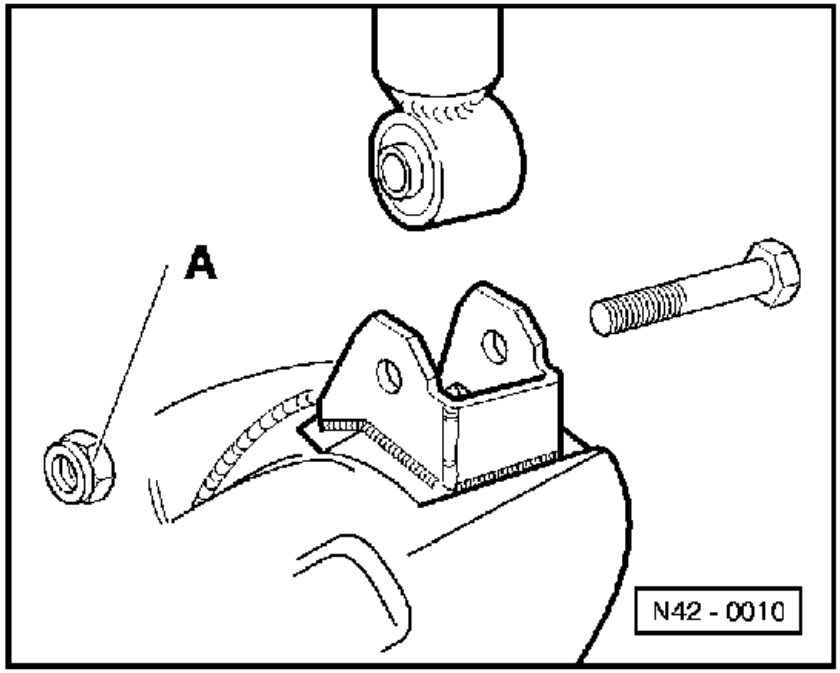

⇦ - Remove trailing arm from suspension strut. Always renew self-locking hexagon nut -A-.

- Press drive shafts off flanges and allow to hang down.

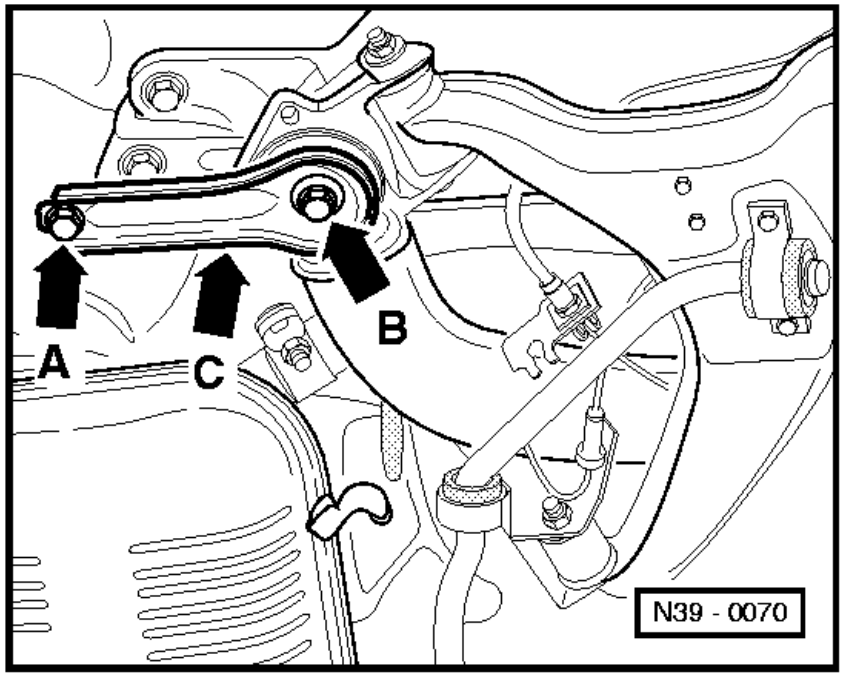

⇦ - Loosen bolt (arrow A) and remove bolt (arrow B).

- Turn supports (arrow C) to one side.

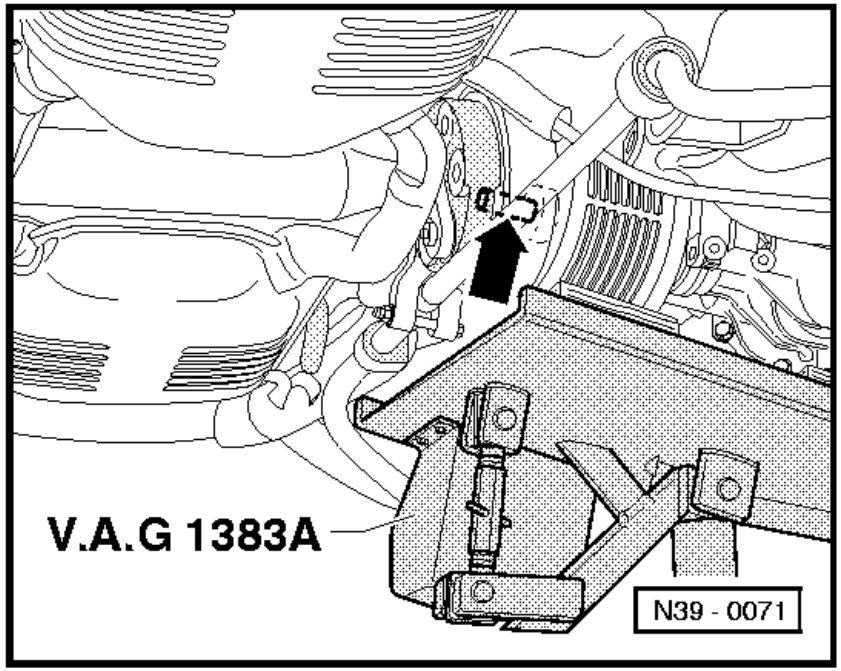

⇦ - Lower rear axle approx. 20 cm using gearbox jack V.A.G 1383 A.

Notes:

◆ Whilst lowering, ensure that the viscous coupling centralising nut (arrow) is not canted in the propshaft and that the propshaft seal is not damaged.

◆ Adjust gearbox jack plate angle so that when lowering, the rear of the final drive lowers first.

◆ Do not damage brake pipes.

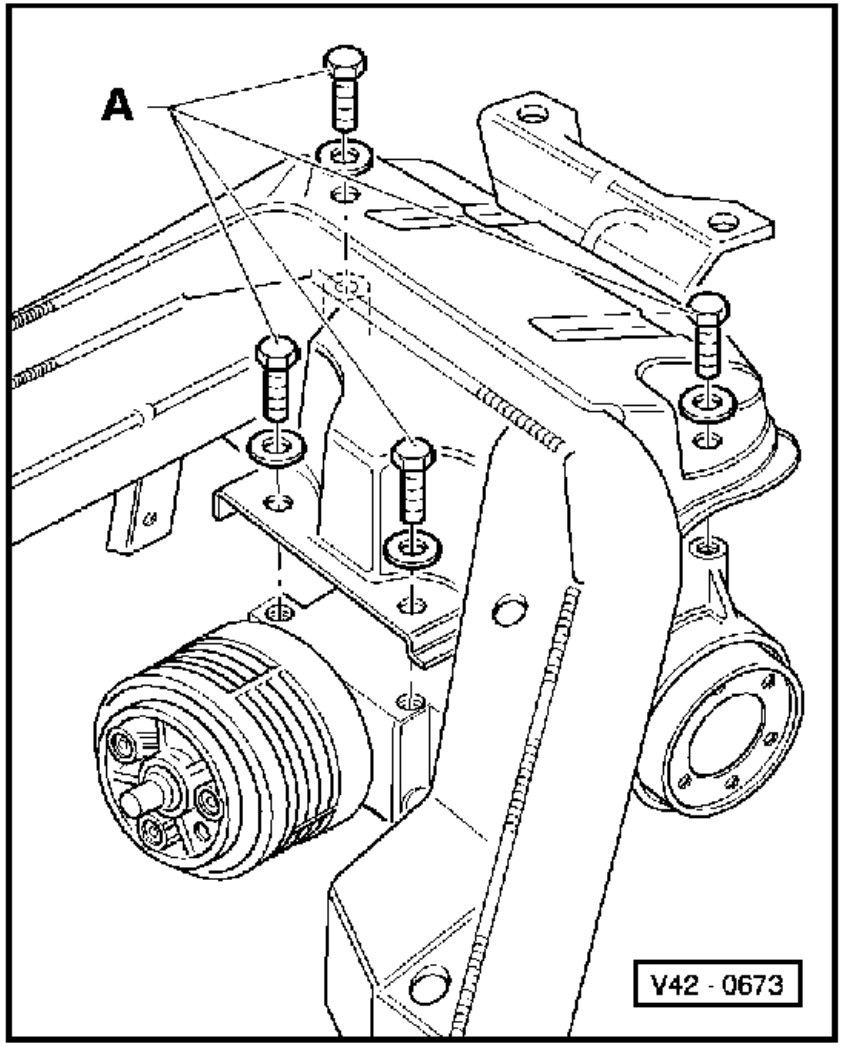

⇦ - Remove securing bolts -A- on top of final drive/axle.

- Lower final drive.

Notes:

◆ The trailing arm can be attached to the suspension strut again and the axle to the bodywork but in each case only hand tight.

- A 2nd mechanic is required when securing the axle to the body.

◆ If the vehicle has to be moved with the propshaft disconnected then secure propshaft to prevent damage.

Installing

Installation is carried out in the reverse sequence, when doing this note the following:

◆ Before securing the axle, ensure that the upper final drive securing bolts are tightened to correct torque.

◆ Before securing trailing arm to suspension strut guide drive shaft onto flange.

- Checking rear final drive oil
=> Page 39-111.

Tightening torques

Drive shaft to final drive	45 Nm
Propshaft to viscous coupling	60 Nm
Final drive mounting to cross member	85 Nm
Axle to body	130 Nm
Support to axle	60 Nm
Trailing arm to suspension strut	65 Nm
Top of final drive to axle	45 Nm