Necessary to readjust the bevel gear when:

◆ Bevel gear housing

◆ Rear axle housing

◆ Bevel gear taper roller bearings

◆ Input shaft

◆ Bearing support

or

◆ Gear set

are renewed.

Adjustment overview => Page 39-161

Adjusting bevel gear taper roller bearing preload (friction torque)

Shaft bevel gear installed.

- Calculate shaft bevel gear bearing frictional torque (if not already known).

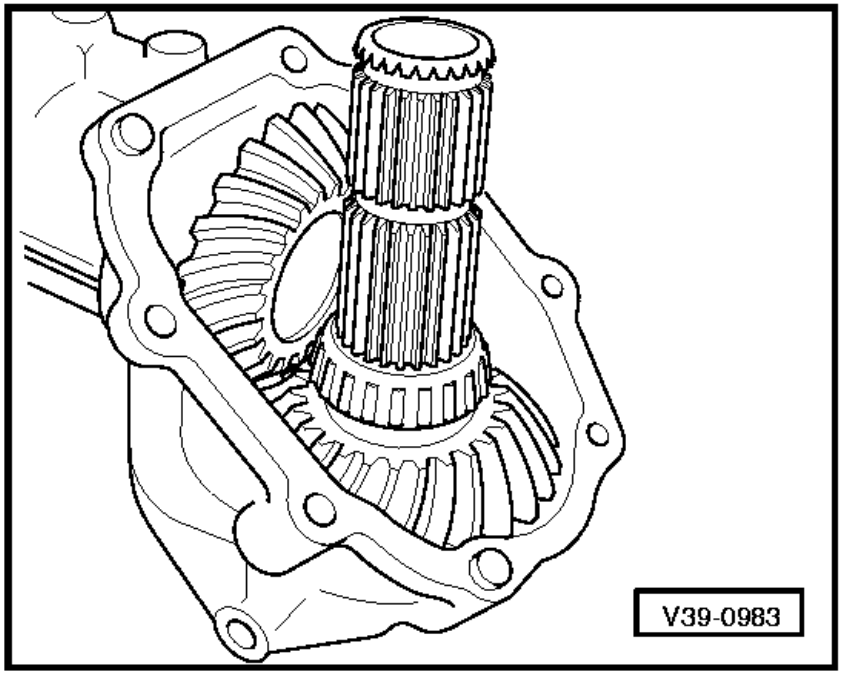

⇦ - Insert bevel gear and input shaft with taper roller bearing inner races.

- Press bevel gear small taper roller bearing outer race along with a 1.2 mm shim (Part No. 113 517 211 A) into bearing support using press piece VW 472/1.

- Install bearing support in rear axle housing.

Note:

When tightening hexagon bolt push bearing support down against shoulder in rear axle housing.

- Push on rear axle housing without differential and tighten hexagon bolts to torque setting.

- Install ring nut without O-ring and without seal.

Determining total friction torque

Following bevel gear mounting frictional torques are to be added to the determined shaft bevel gear mounting friction torques:

new bearings	used bearings[1])
200 ... 250 Ncm	30 ... 50 Ncm

[1])run at least 50 km (30 miles)

Example:

Shaft bevel gear friction torque (used bearings)	40 Ncm
Bevel gear friction torque (new bearings)	+ 220 Ncm
Total friction torque	260 Ncm

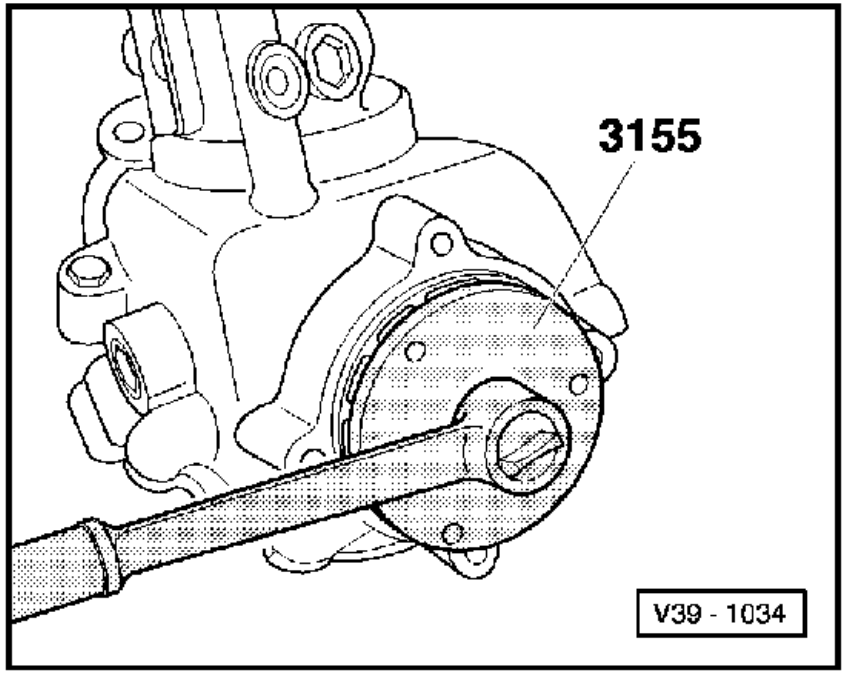

⇦ - Tighten ring nut until the calculated total friction torque is achieved. Check friction torque continuously.

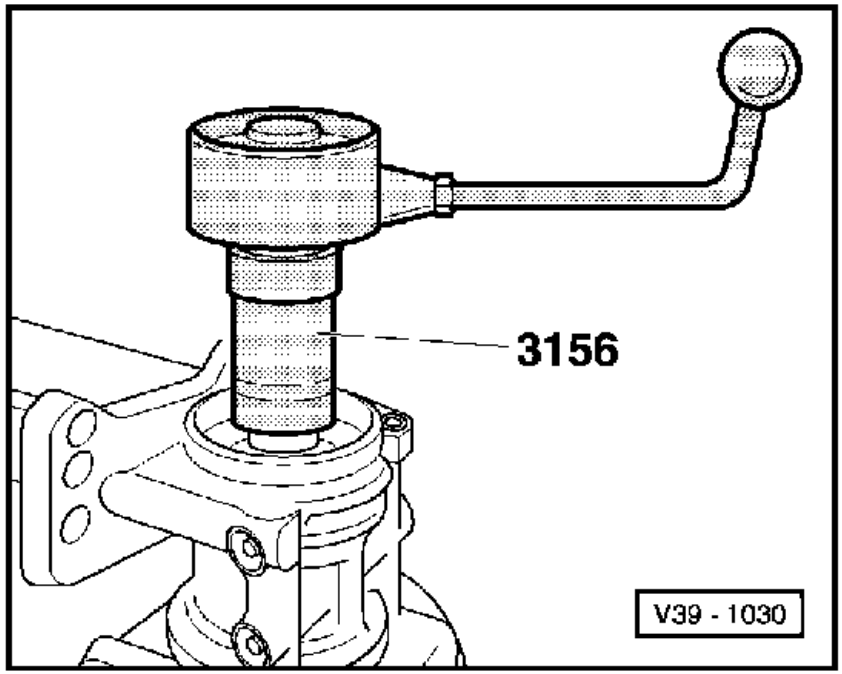

⇦ - Measure friction torque.

- Note total friction torque set. It is not necessary to measure the installed depth of the ring nut (S1).

Adjusting backlash

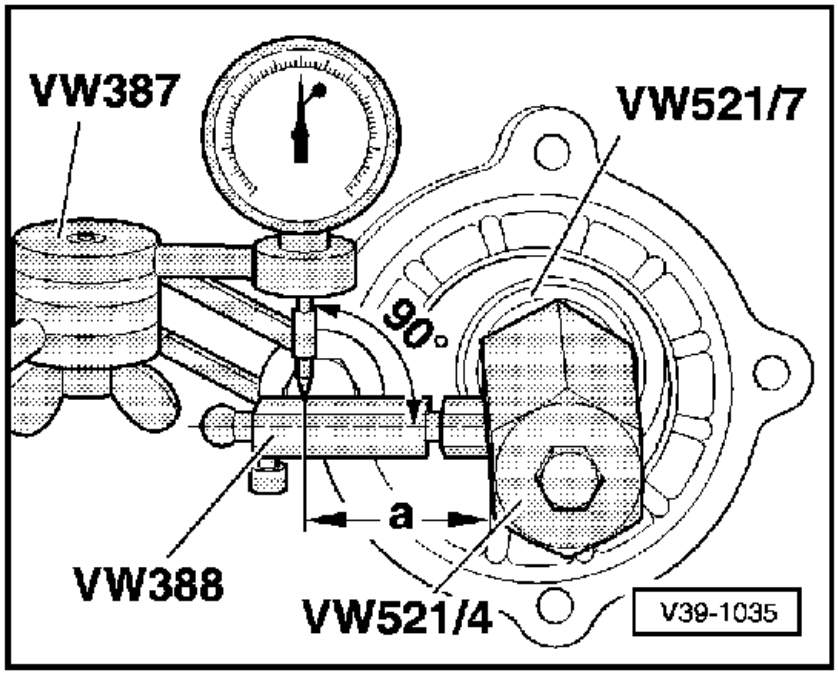

Bevel gear with a 1.2 mm thick shim installed on the S2 side.
Total friction torque set.

⇦ - Assemble measuring tools.
  - Dial gauge extension approx. 25 mm long.
  - Dimension "a" = 39 mm.
  - Screw measuring lever VW 388 in so that the dial gauge extension is at right angles to the measuring surface.

- Turn bevel gear on to stop. Set dial gauge to zero, turn bevel gear back and measure play. Note value.

- Loosen clamping sleeve locking screw and, after turning bevel gear through a further 90°repeat complete measuring process a further three times. Add the four measured values together and calculate average backlash.

Calculating average backlash

Example:

	1st measurement	0.45 mm
+	2nd measurement	0.44 mm
+	3rd measurement	0.45 mm
+	4th measurement	0.46 mm
Total		1.80 mm

Average backlash = 1.80 mm /4
= 0.45 mm.

Note:

The relationship backlash to bevel gear with input shaft displacement is almost a ratio of 1:1. Therefore the calculated average backlash can be used directly for calculating S2.

Determining shim S2 thickness

	-	average backlash
	+	Lift (constant value)

Lift = 0.20 mm

Example:		
	Fitted shim	1.20 mm
-	average backlash	0.45 mm
		0.75 mm
+	Lift (constant)	0.20 mm
S2	=	0.95 mm

The following adjustment shims are available:

Size (mm)	Part No.
0.15	113 517 201A
0.20	113 517 202A
0.30	113 517 203A
0.40	113 517 204A
0.50	113 517 205A
0.60	113 517 206A
0.70	113 517 207A
0.80	113 517 208A
0.90	113 517 209A
1.00	113 517 210A
1.20	113 517 211A

- Remove rear axle housing, remove bearing support and press taper roller bearing outer race out. Remove 1.2 mm shim.

- Insert determined S2 and reinstall outer race.

Carrying out check measurement

- Install rear axle housing with installed bearing support to bevel gear housing.

- Tighten ring nut until the total friction torque is set.

- Measure backlash, it must be between 0.15 - 0.25 mm.

After installing components and after installing rear axle housing to bevel gear housing tighten ring nut to the position marked during control measurement.