Dismantling and assembling gearbox housing cover, gearbox housing, selector mechanism, input shaft, output shaft (pinion shaft), differential and selector forks

Dismantling

- Drain gearbox oil.

On vehicles with 6 cylinder injection engine:

Remove bevel box as follows:

- Remove cap by piercing cap centre with a screwdriver and levering out.

⇦ - Remove drive flange counter sunk head bolt with V.A.G 1669 or 6 mm socket insert cone (commercially available) and counter hold against turning with a drift.

- Pull drive shaft with drive flange out carefully and note spring behind drive flange.

- Remove bevel box/gearbox connecting bolts (arrows -A- and -B-).

- Press bevel box off gearbox.

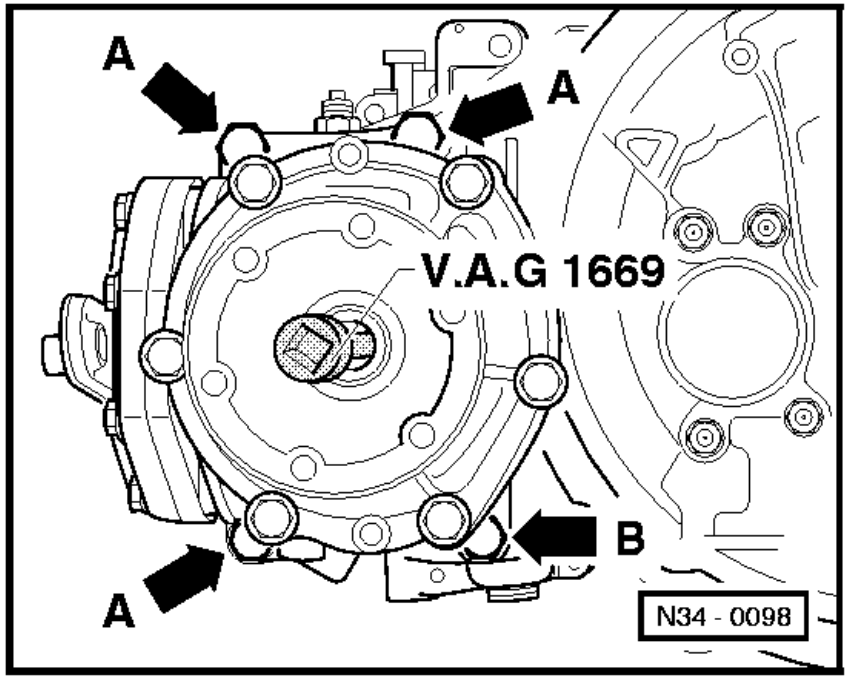

On vehicles with 6 cylinder injection engine: ---

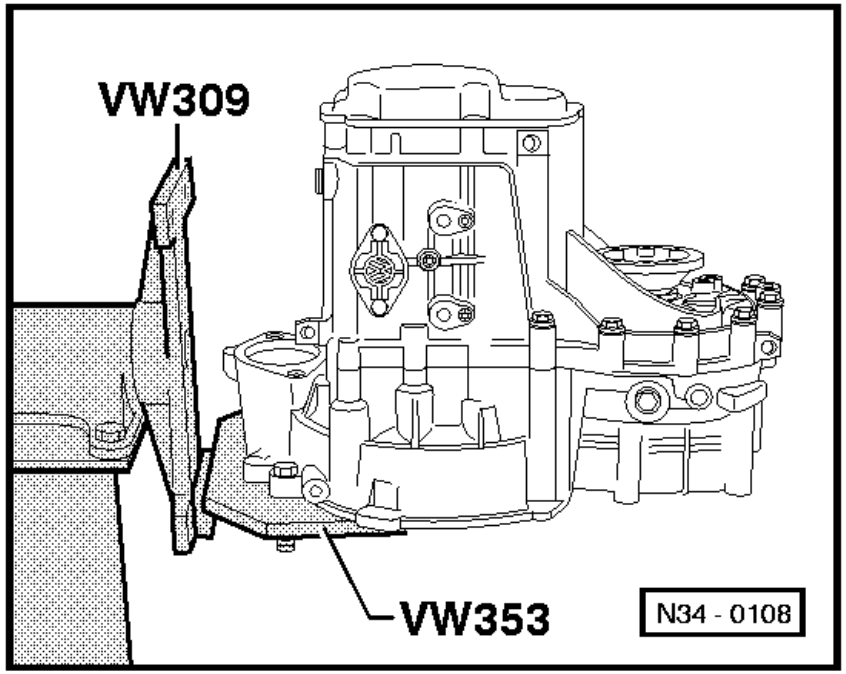

⇦ - Secure gearbox in assembly stand.

On vehicles with 4 cylinder engine:

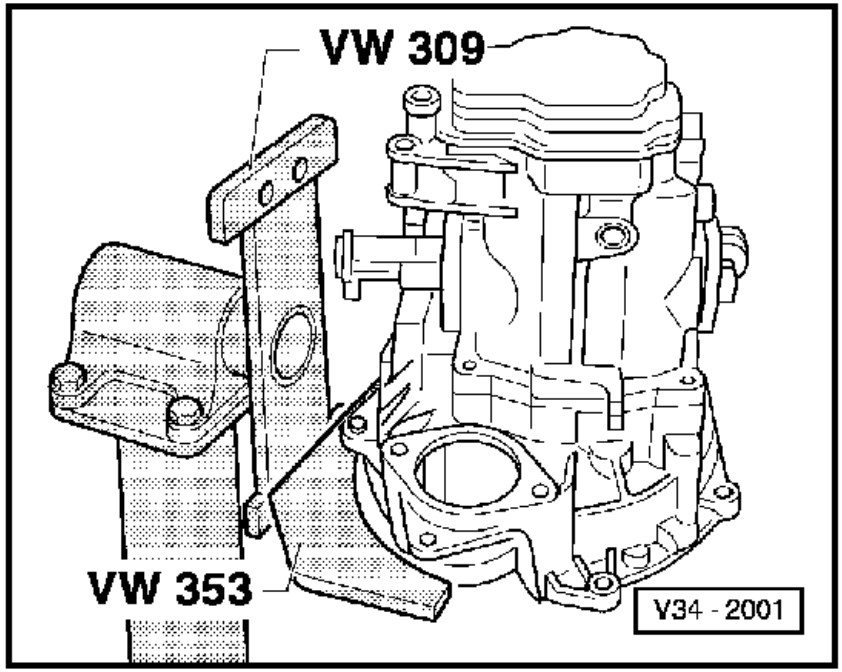

⇦ - Secure gearbox in assembly stand.

- Remove clutch release lever and release bearing => Page 30-15.

- Remove guide sleeve => Page 30-15.

⇦ - Remove gearbox housing cover (arrow).

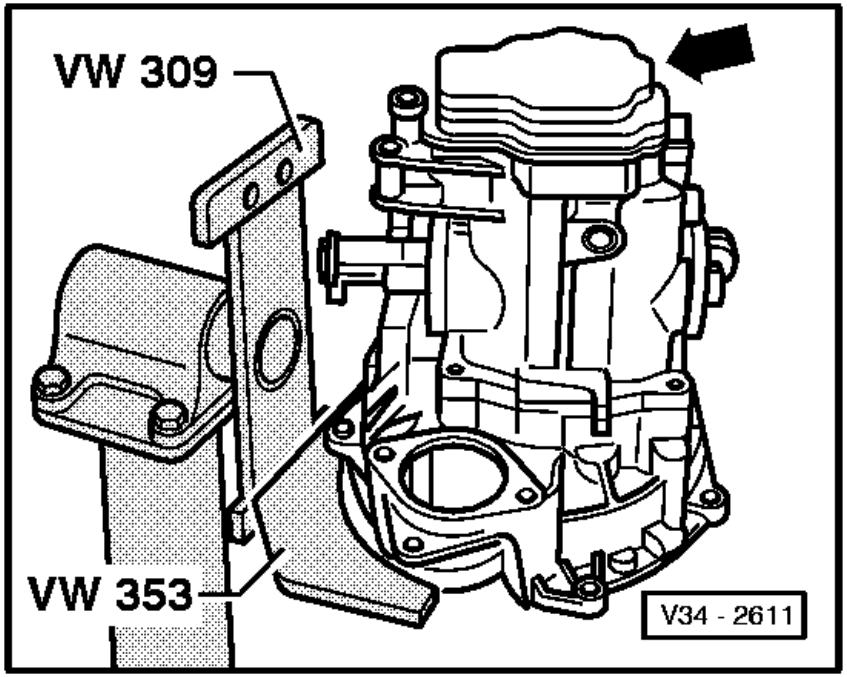

⇦ - Remove 5th gear selector fork (arrow)

Note:

Before lifting the locking collar, take off spring and lock body. Then afterwards replace locking collar on syncro-hub again, but without selector fork.

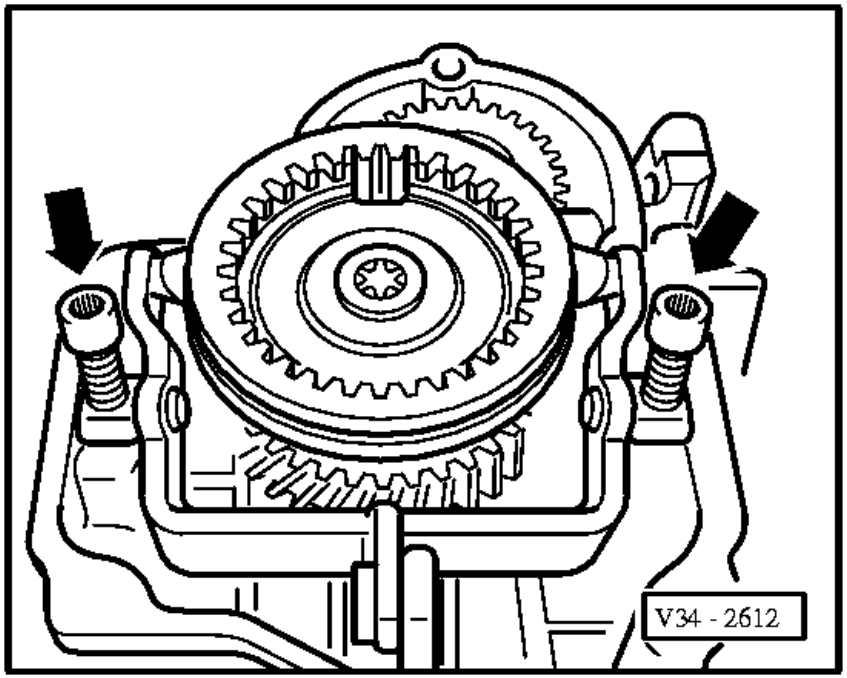

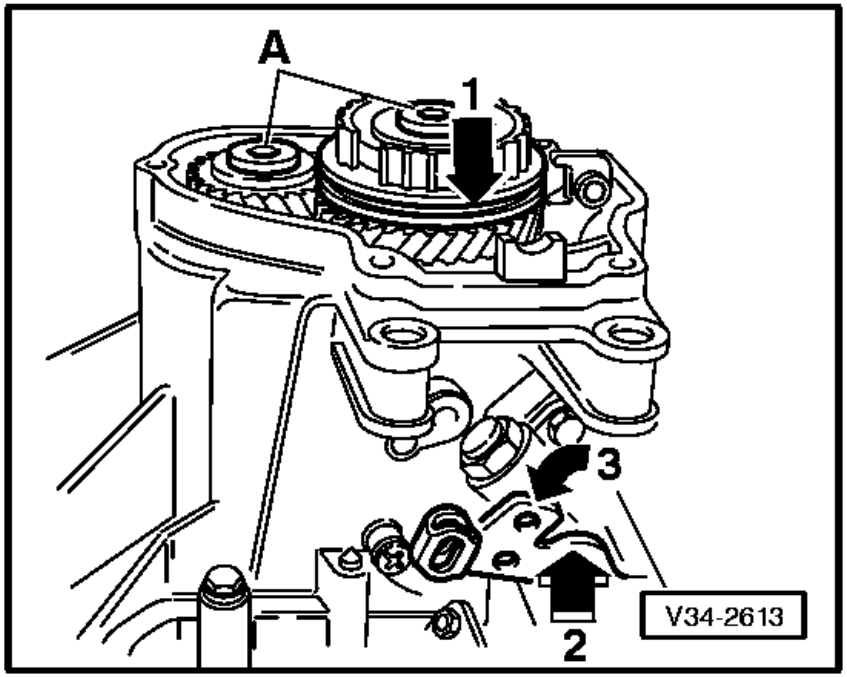

⇦ - Remove bolts -A- for synchro-hub and 5th gear, to do this select 1st gear (arrows 2 and 3) and 5th gear (arrow 1).

- After engaging both gears the input shaft and output shaft are locked, synchro-hub and gear wheel cannot turn. Both bolts can now be loosened.

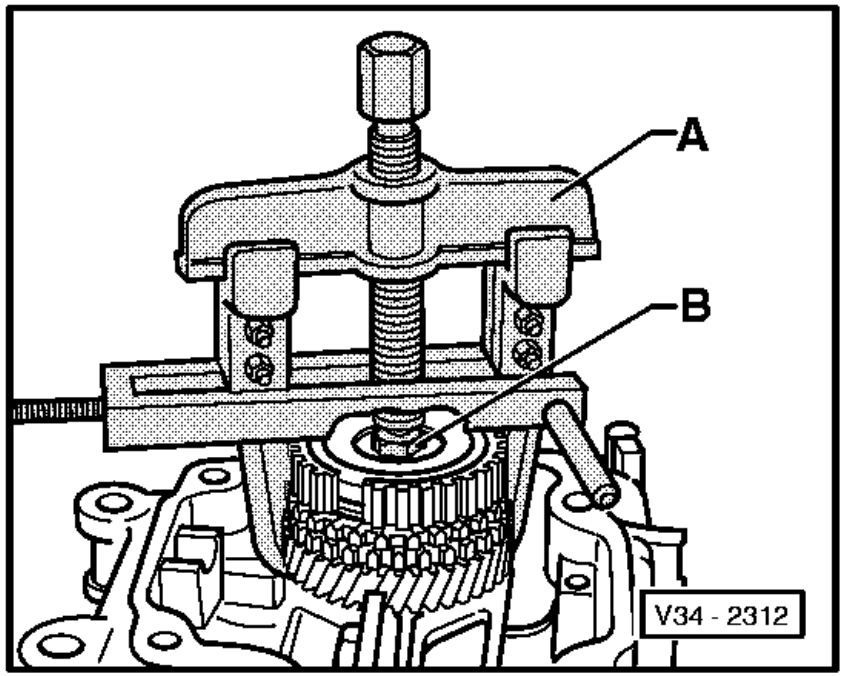

⇦ - Pull off synchro-hub with 5th gear wheel and take off needle roller bearing.

A - Two arm puller e.g. Kukko 20/10 with Matra V/170 hooks.

B - Hexagon bolt M10 x 20

⇦ - Pull off 5th gear wheel

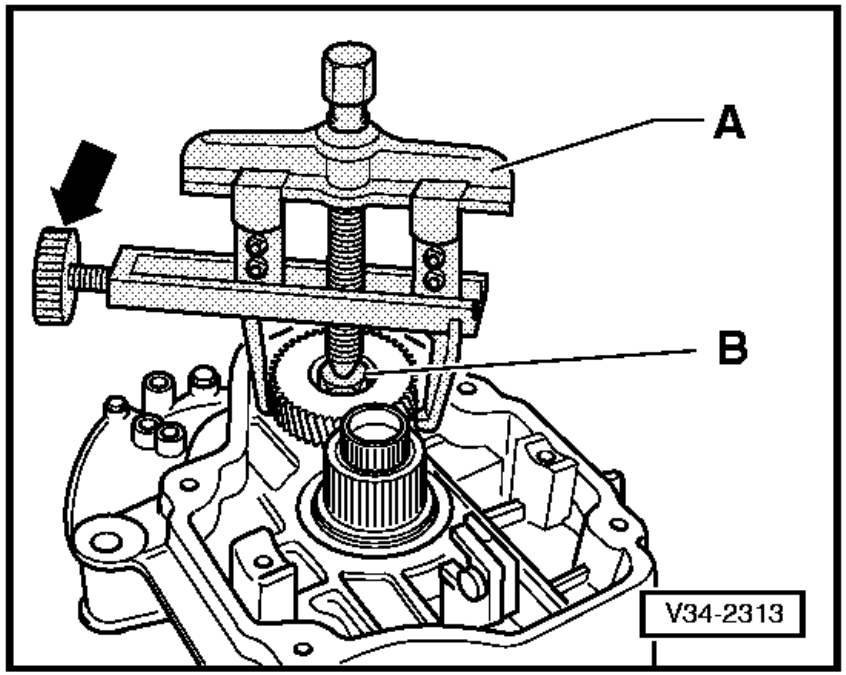

A - Two arm puller e.g. Kukko 20/10 with Matra V/170 hooks.

B - Hexagon bolt M10 x 20

Removal sequence:

- Assemble two arm puller and centralize by turning screw (arrow).
- Pull gear wheel off with two arm puller, first heat with hot air blower V.A.G 1416 if necessary.

Note:

When pulling off the gear wheel ensure that the hooks do not bend outwards, if necessary tighten screw (arrow). Check 5th gear wheel for damage after removal.

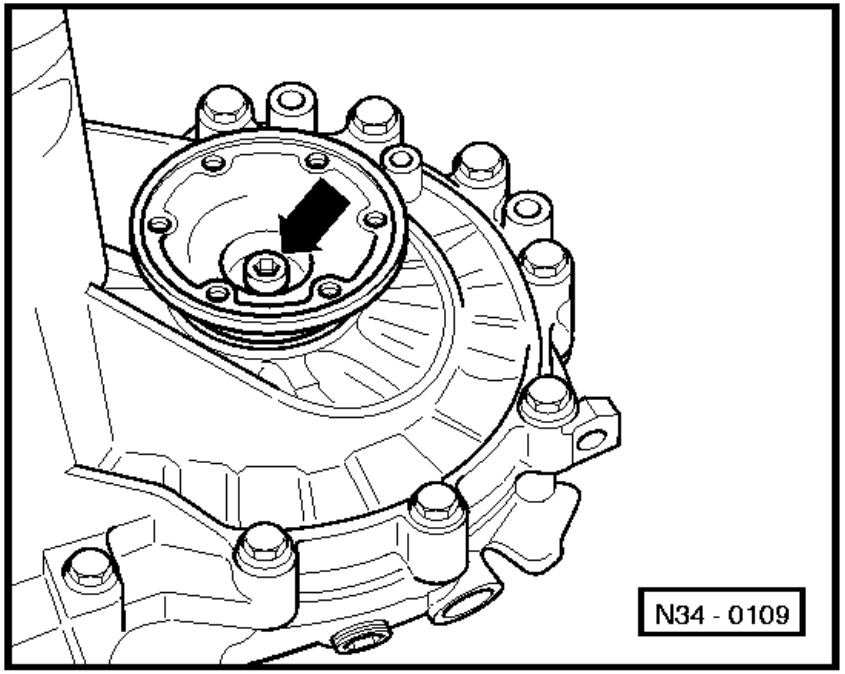

⇦ - Remove left-hand flange shaft, to do this remove counter sunk head bolt (arrow).

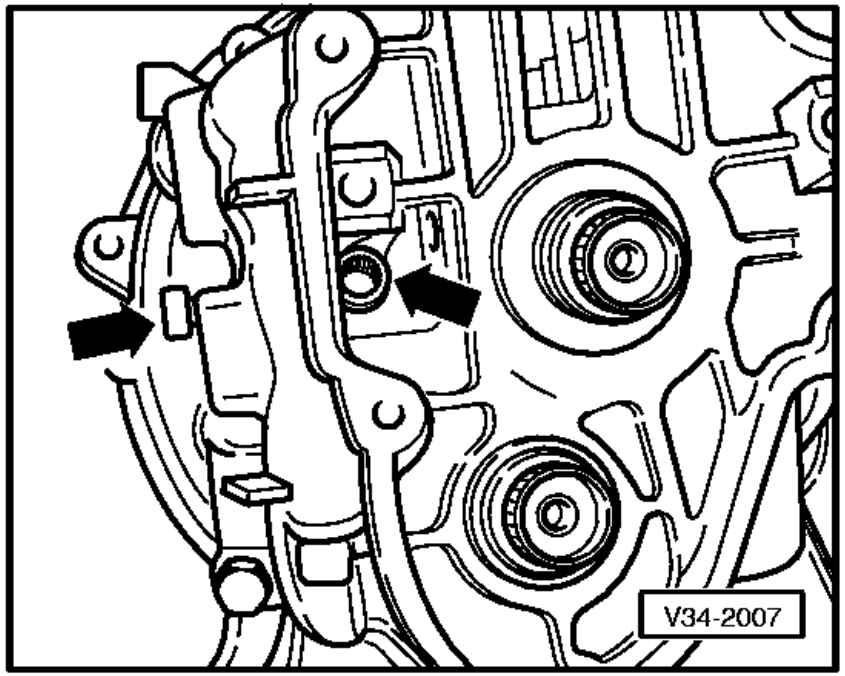

⇦ - Remove both reverse shaft support bracket bolts (arrows).

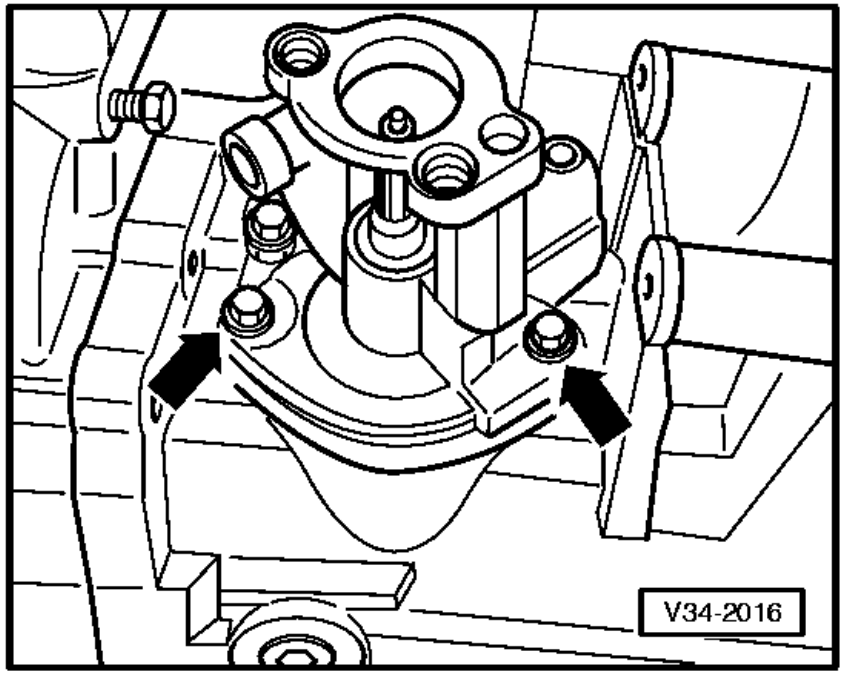

⇦ - Remove selector shaft with selector cover, to do this place selector shaft in neutral position. Then remove bolts (arrows) and pull selector shaft out of the gearbox housing.

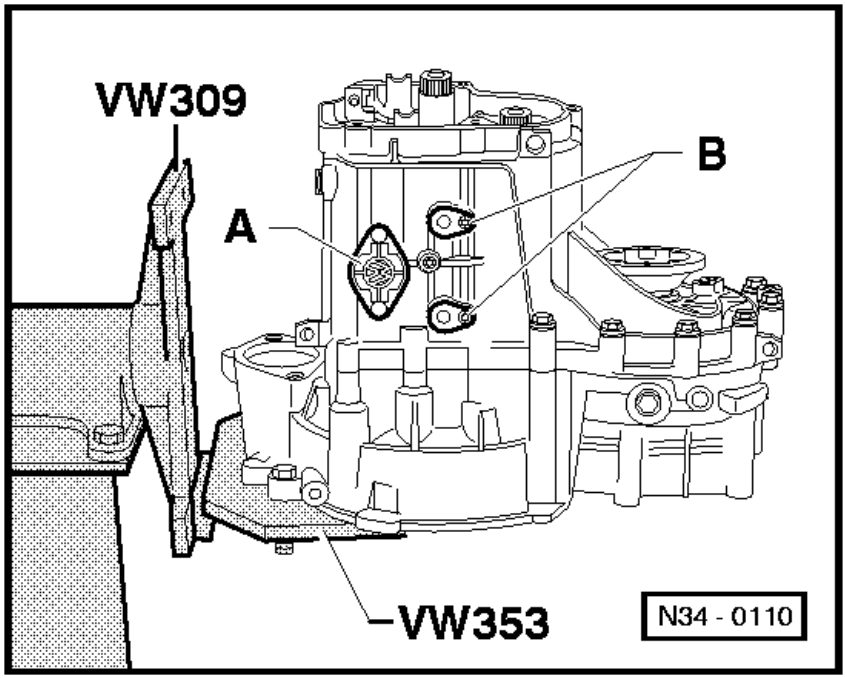

⇦ - Remove cover plate -A- and pivot pins -B- from underside of gearbox.

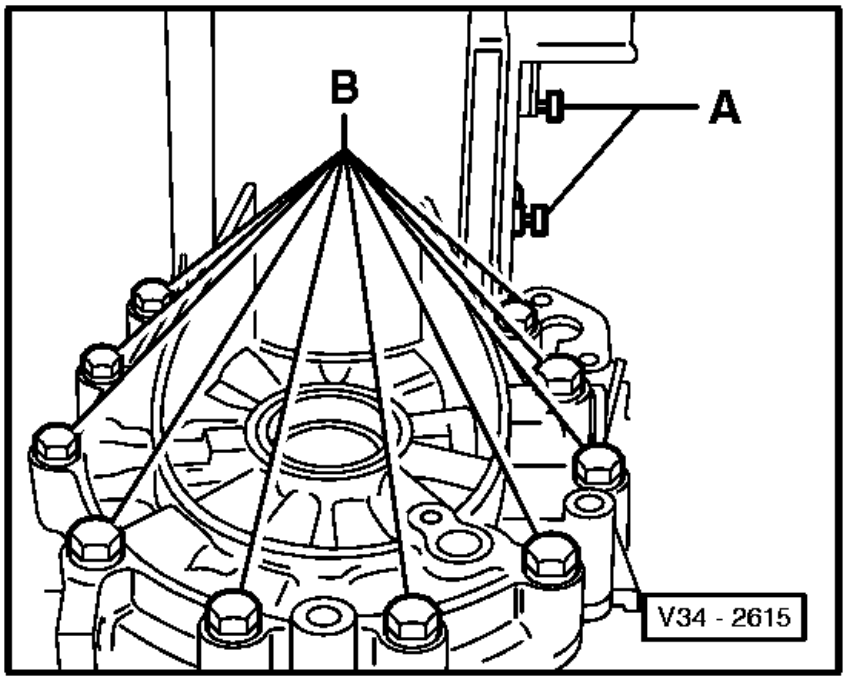

⇦ - Remove pivot pins -A- on top side of gearbox and gearbox housing to clutch housing securing bolts -B- in area of differential.

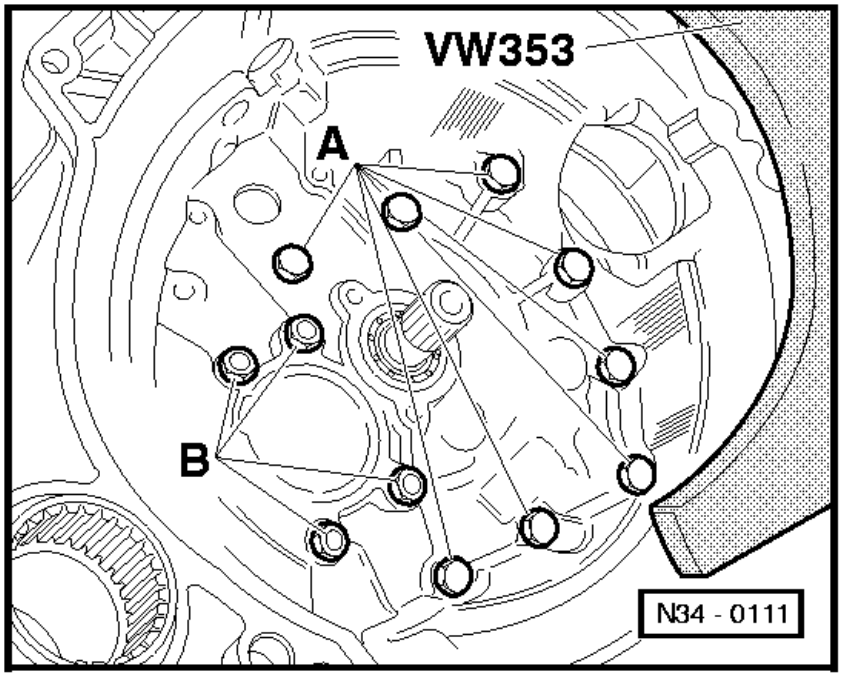

⇦ - Remove bolts -A-, from inside clutch housing for securing clutch housing to gearbox housing.

Note:

Do not remove nuts -B- for output shaft bearing support.

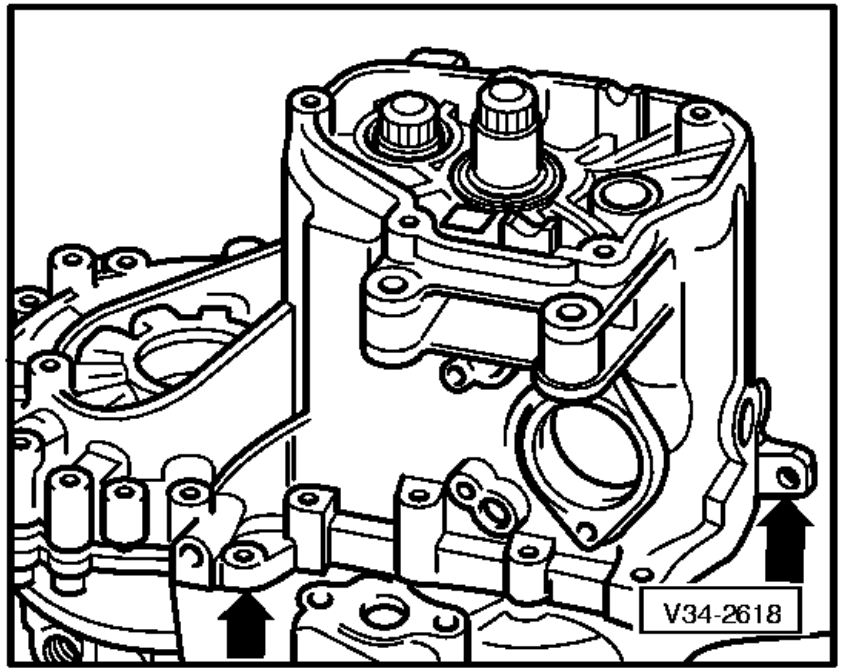

⇦ - Take-off gearbox housing, if necessary carefully lever up all round and alternating between sides on the protruding housing flange (arrows), being careful not to damage sealing surfaces.

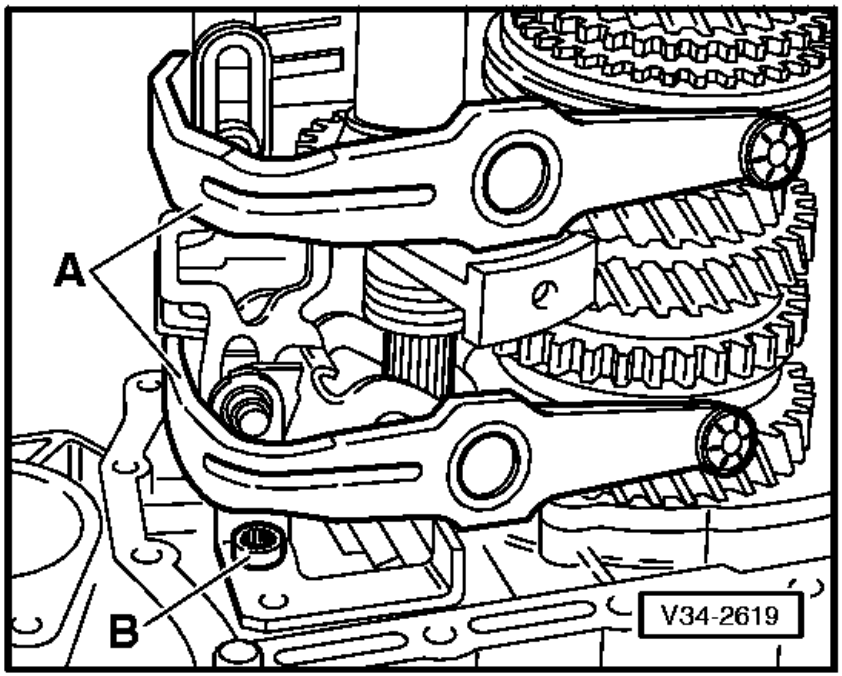

⇦ - Remove selector forks -A- together with selector plates.

- Unscrew bolt for selector mechanism for reverse gear -B-.

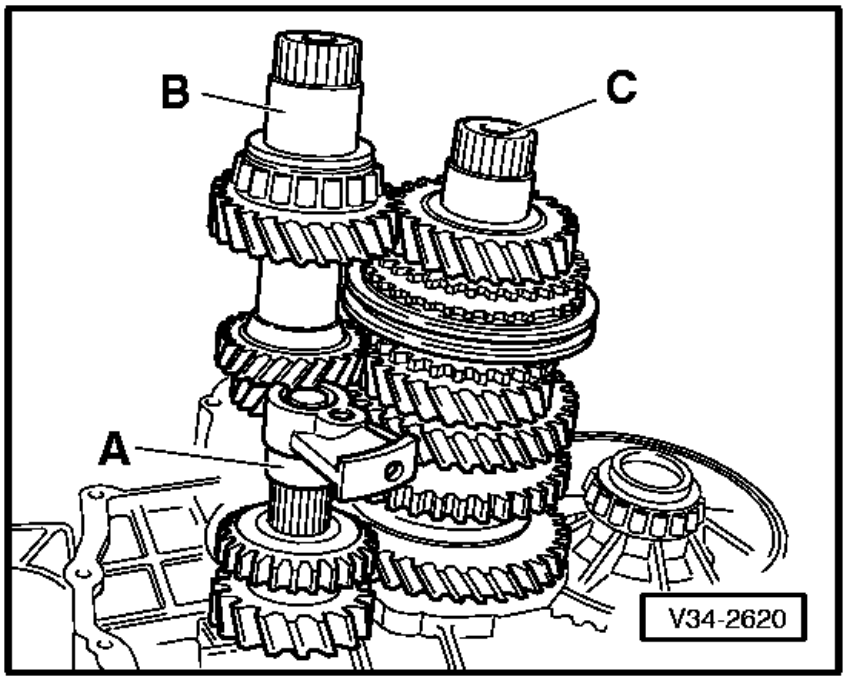

- Remove nuts for output shaft bearing support (=> Page 34-96, illustration N34-0111, item -B-).

⇦ - Remove reverse gear -A-, input shaft -B- and output shaft -C- one after the other from clutch housing.

- Take out differential.

Assembling

- Install differential.

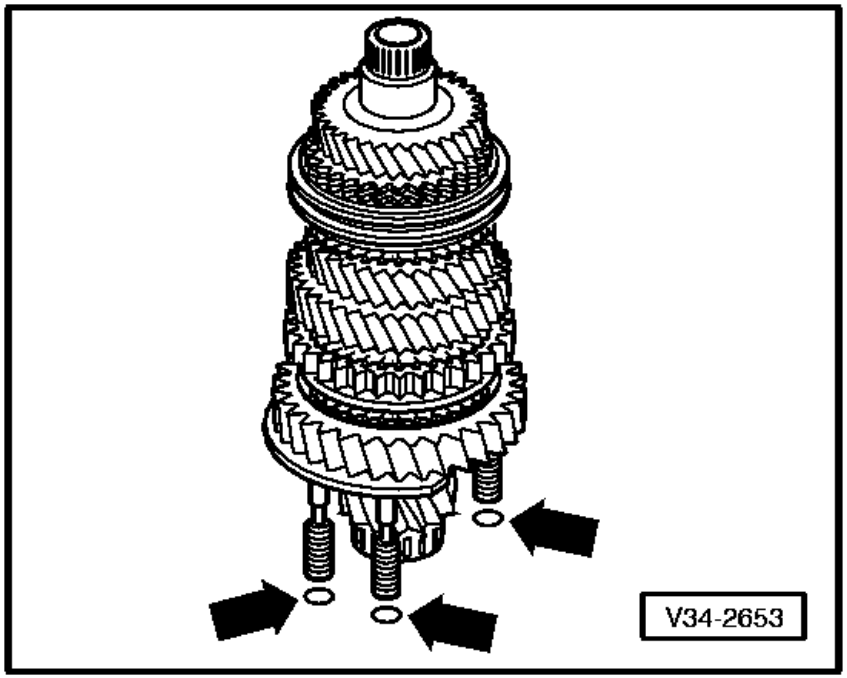

⇦ - Always renew sealing rings (arrows) for output shaft bearing support.

Note:

The illustration only shows 3 of the 4 sealing rings.

- Install input shaft, output shaft and reverse shaft together.

- Tighten nuts for output shaft bearing support.

- Clean locking fluid remnants from threads in the reverse shaft support (=> Page 34-100, illustration V34-2293, arrow). The remnants can be removed using a tap.

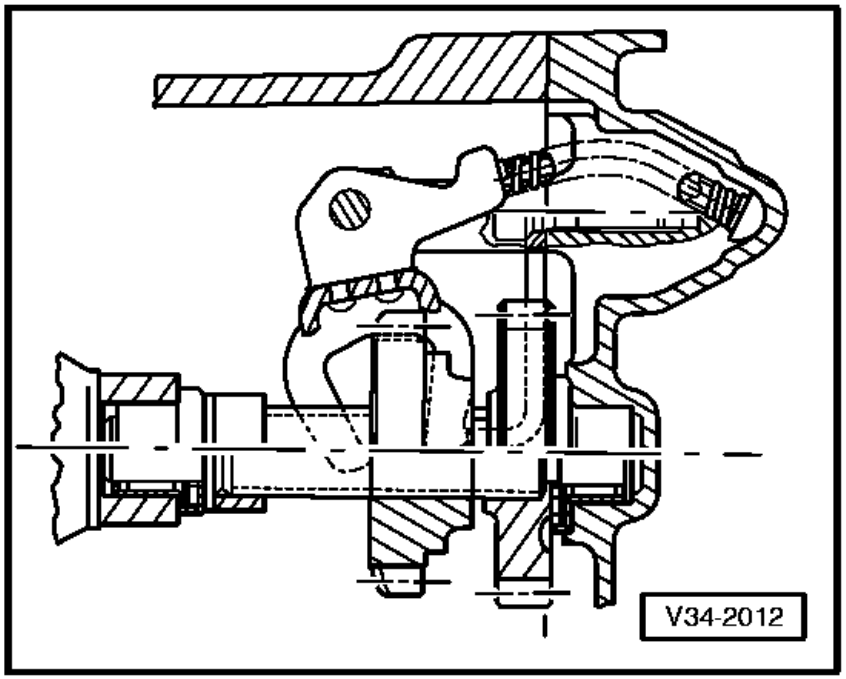

- Install reverse shaft support.

- Install reverse gear selector mechanism.

⇦ Installation position reverse gear

- Install selector forks together with selector plates.

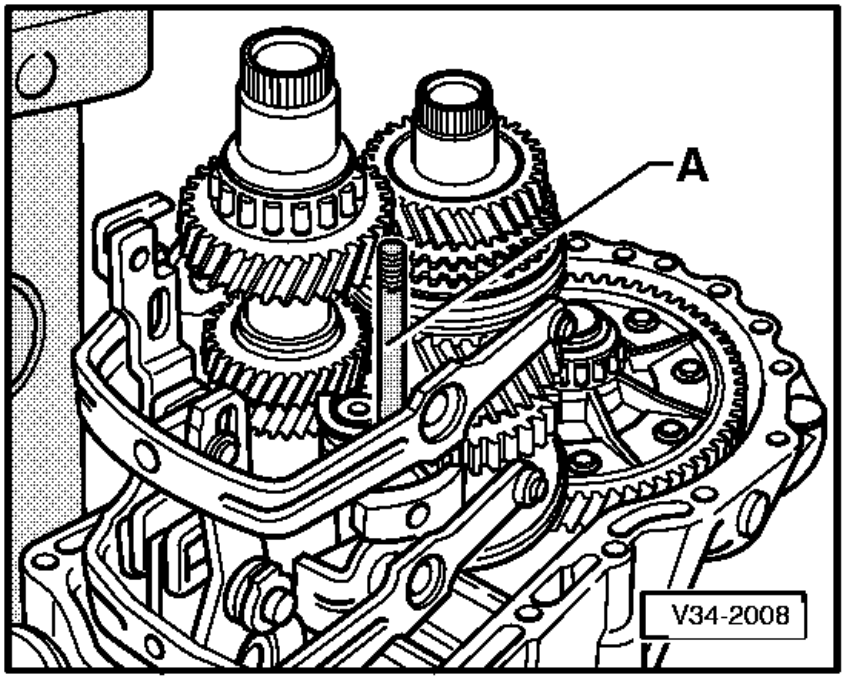

⇦ - Screw M 8 x 100 mm studs -A- into reverse shaft support so that the shaft is aligned after fitting gearbox housing.

- Align selector plates.

Note:

The selector segments must be positioned in the grooves on the locking collars.

- Fit gearbox housing.

Install reverse shaft support bolts (arrow) as follows:

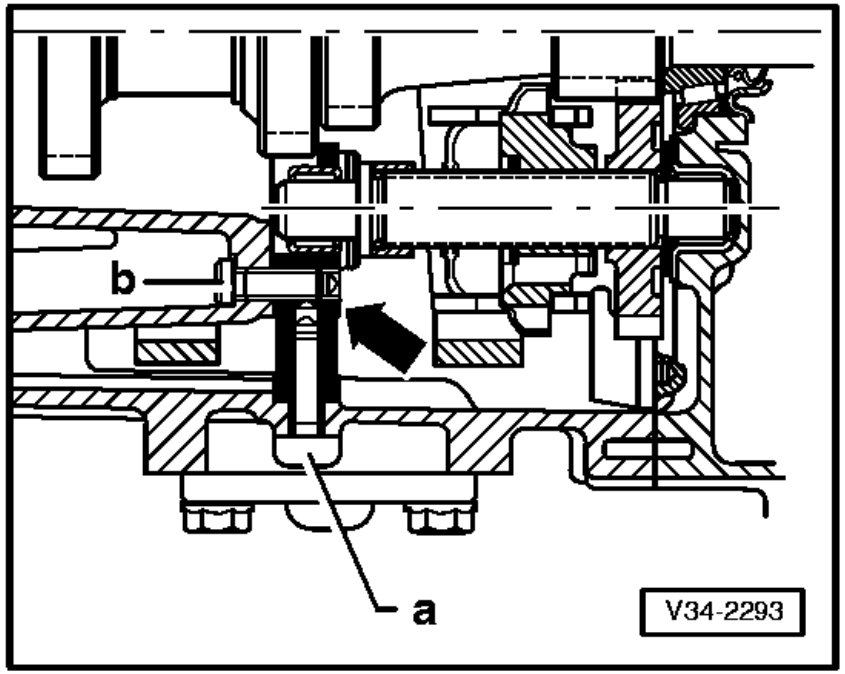

⇦ - Insert bolt -a-, remove stud (=> Illustration V34-2008), insert bolt -b- and hand tighten.

Tightening sequence:

1 - Bolt -a- 30 Nm
2 - Bolt -b- 30 Nm

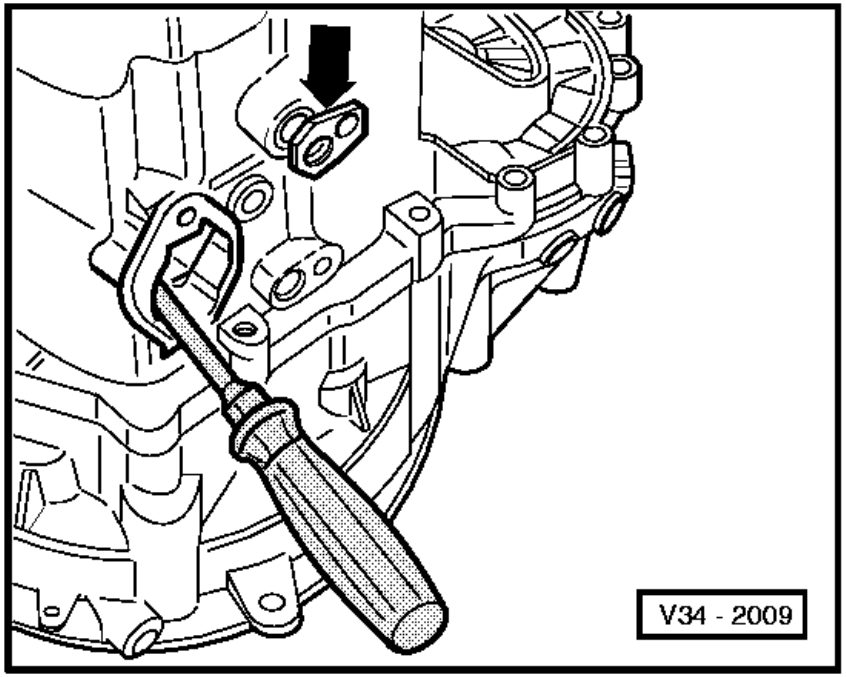

⇦ - Install pivot pin (arrow) for selector forks. To do this align selector mechanism with a screwdriver, so that the relevant pivot pin can be installed.

- Fit selector shaft cover

⇦ Install selector shaft as follows:

- Place selector plates in neutral.

- Locate lug (arrow 1) in the recess in gearbox housing. Position selector shaft so that selector finger (arrow 2) is inserted in the selector plates.

- Install selector shaft cover.

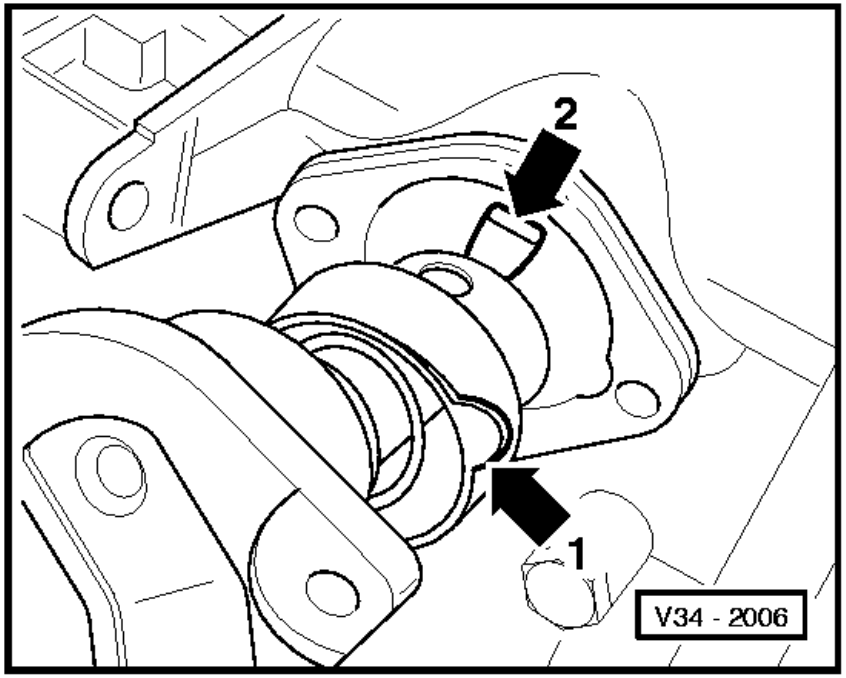

⇦ **Installation position 5th gear wheel**

The circumferential groove (arrow) faces to gearbox housing.

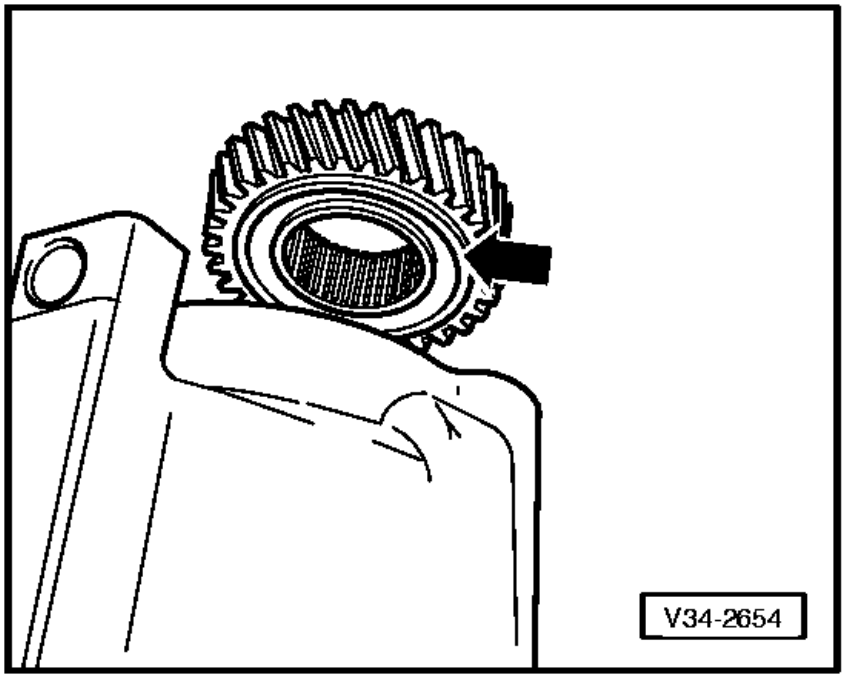

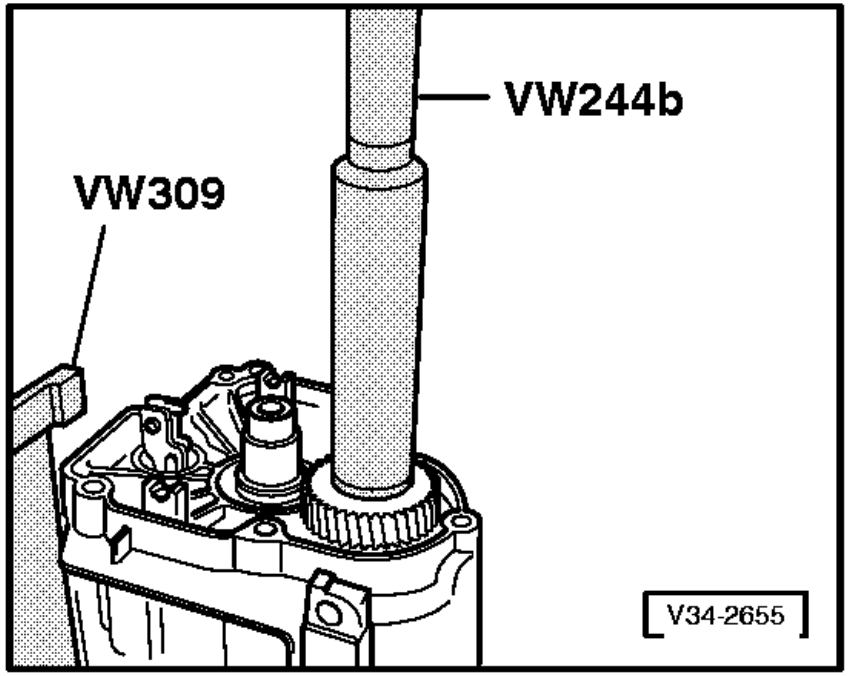

⇦ - Knock-on 5th gear wheel.

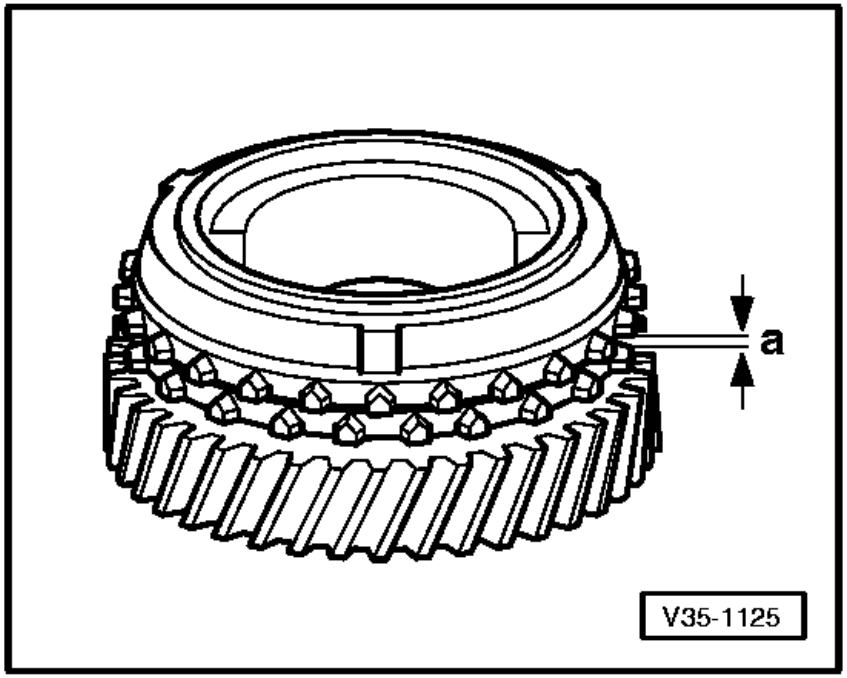

Checking 5th gear synchro-ring

⇦ - Before installing 5th gear wheel and synchro-ring press the synchro-ring onto the cone of the gear wheel and measure gap -a- with a feeler gauge.

Gap -a-	New	Wear limit
5th gear	1.1 ... 1.7 mm	0.5 mm

- Install 5th gear wheel with needle roller bearing

- Place 5th gear synchro-ring on gear wheel

- Assembly 5th gear synchro-hub/locking collar before installing => Page 35-12.

⇦ **Installation position 5th gear synchro-hub/locking collar**

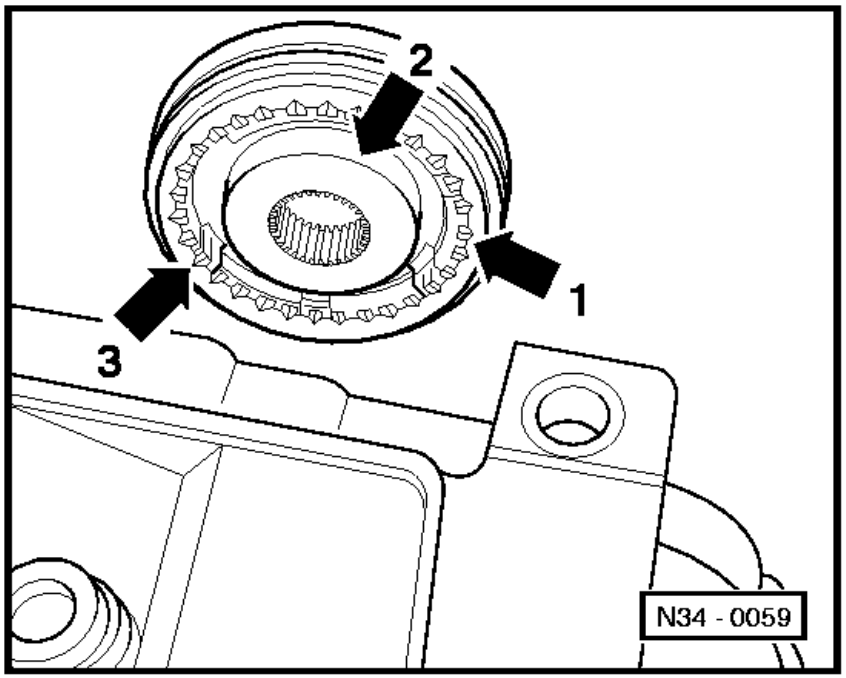

The pointed teeth of the locking collar (arrow 1) and the high shoulder of the synchro-hub (arrow 2) face the gearbox housing.

The syncro-hub mountings (arrow 3) align with the synchro-ring cast locking pieces (=>arrows on Illustration N35-0018, Page 34-104).

⇦ **5th gear synchro-ring with cast locking pieces (arrows)**

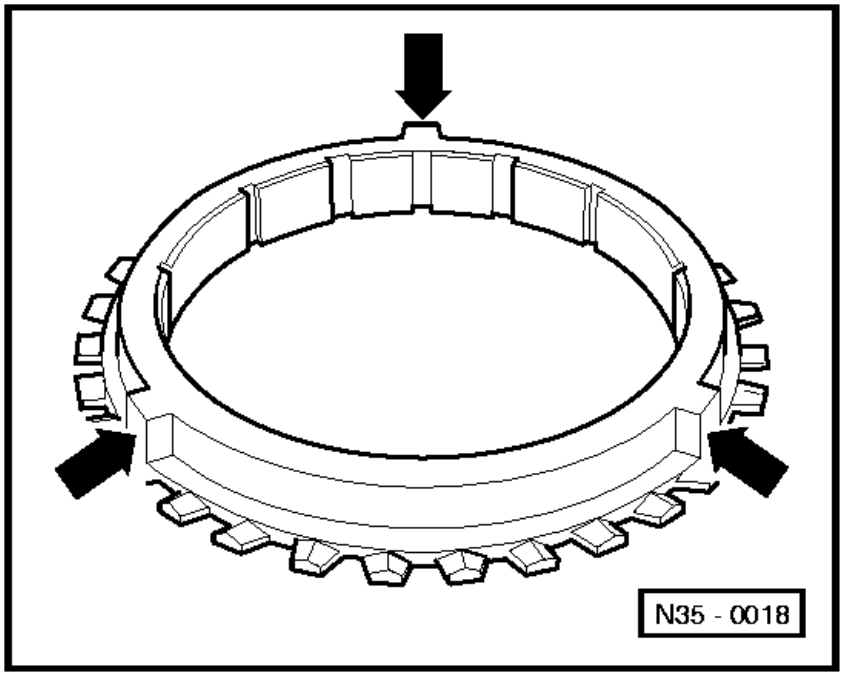

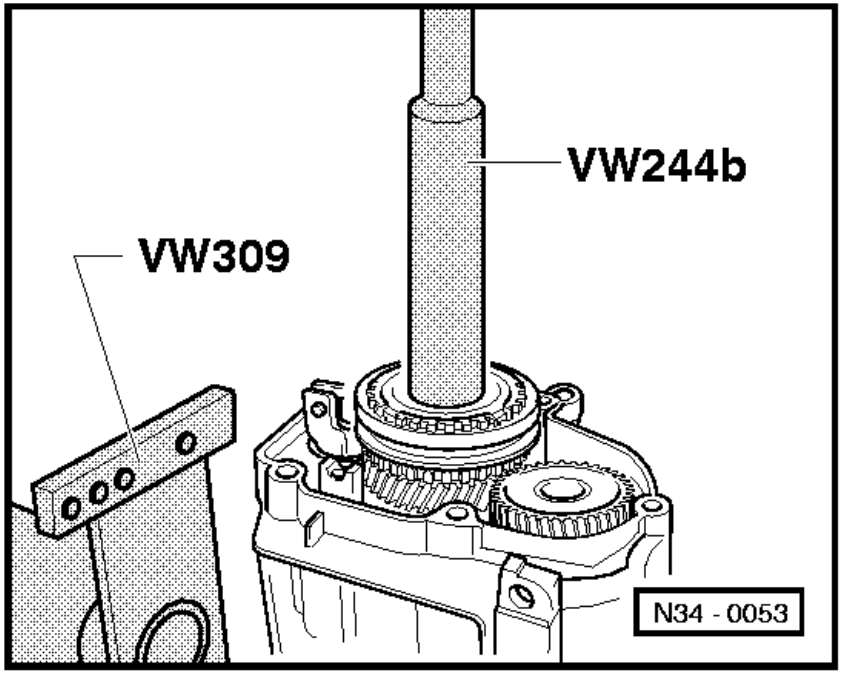

⇦ - Knock-on 5th gear synchro-hub

Note:

When driving on ensure synchro-ring is free to move.

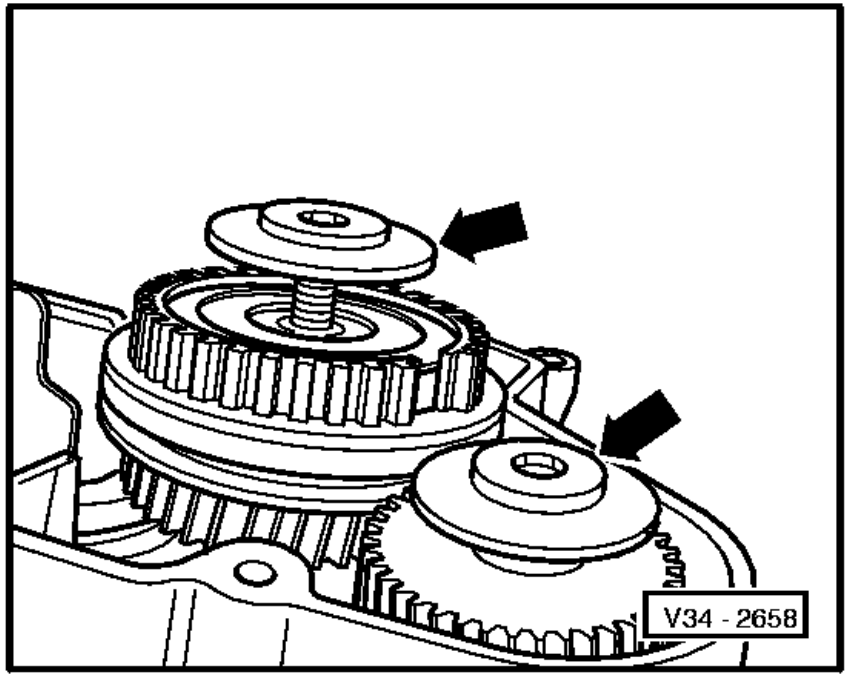

- Screw-in securing bolts for synchro-hub and 5th gear wheel.

⇦ **Installation position of dished spring for gear wheel and 5th gear synchro-hub securing bolts:**

The outer diameter (concave side -arrows-) faces 5th gear.

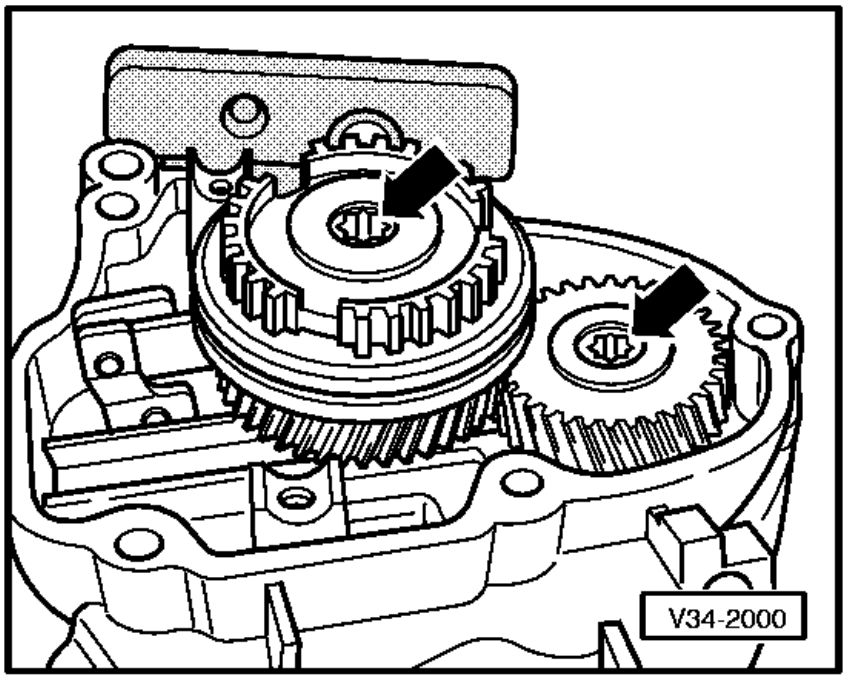

⇦ - Engage two gears before tightening 5th gear synchro-hub and gear wheel securing bolts (arrows) (=>Illustration 34-2613, Page 34-92)

- Install 5th gear selector fork.

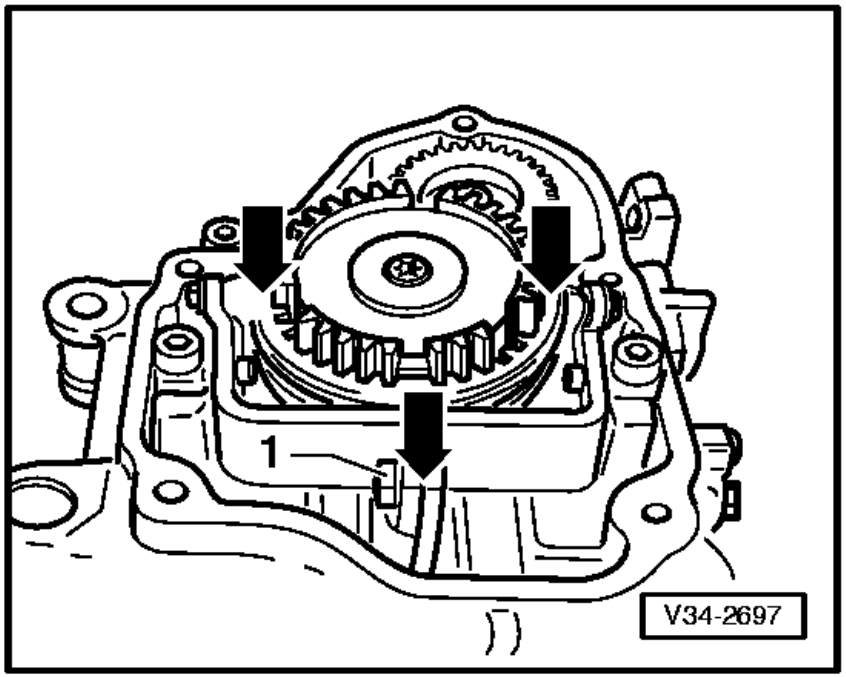

⇦ **Adjusting 5th gear:**

- Engage 5th gear. Loosen bolt -1-. Press locking collar and selector fork jaws in direction of arrow, then tighten bolt -1- to 25 Nm.

● Check measurement :
It must not be possible to slide a 0.2 mm feeler gauge between locking collar and gear wheel. If necessary repeat adjustment.

- Disengage 5th gear. Locking collar must now be in the neutral position. Synchro-ring must move freely.

- Fit gearbox housing cover

- Install flange shaft complete => Page 34-85

- Remove gearbox from assembly stand and place down.

On vehicles with 6 cylinder injection engine:

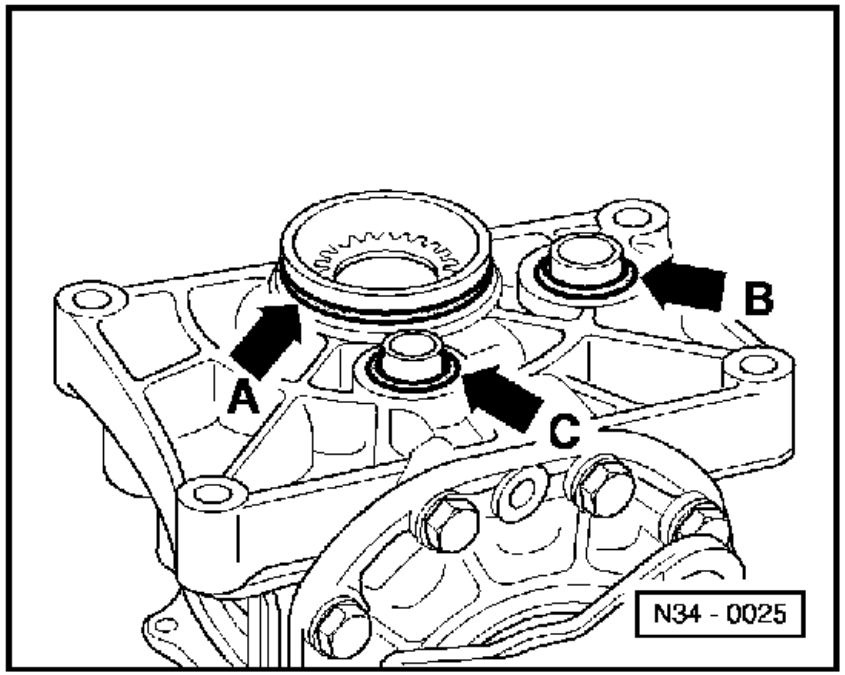

⇦ - Always replace sealing ring to seal bevel box/gearbox (arrow A) and sealing rings to seals sleeves for the oil supply system (arrow B and C), lightly coat with oil.

- Push bevel box completely onto gearbox, thereby ensuring that the bevel box input shaft teeth are guided centrally onto the differential connecting piece.

- If the teeth position and the central guide are correctly set then the bevel box will slide onto the stop against the gearbox.

- Do not pull the bevel box onto the gearbox using securing bolts otherwise the bevel box will cant and the securing eyes can break off.

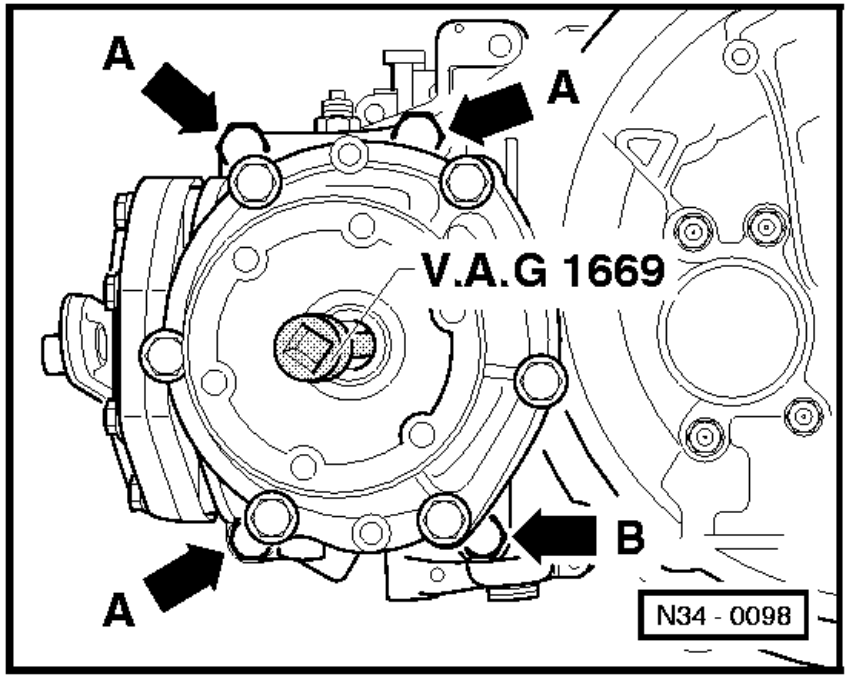

⇦ - Tighten bevel box/gearbox connecting bolts (arrow -A- and -B-).

- Install output shaft drive flange.

- Tighten output shaft drive flange counter sunk head bolt with V.A.G 1669 or 6 mm socket insert (commercially available) and counter hold against turning with a drift.

- Fit release bearing guide sleeve => Page 30-15.

- Fit clutch release lever and release bearing => Page 30-15.