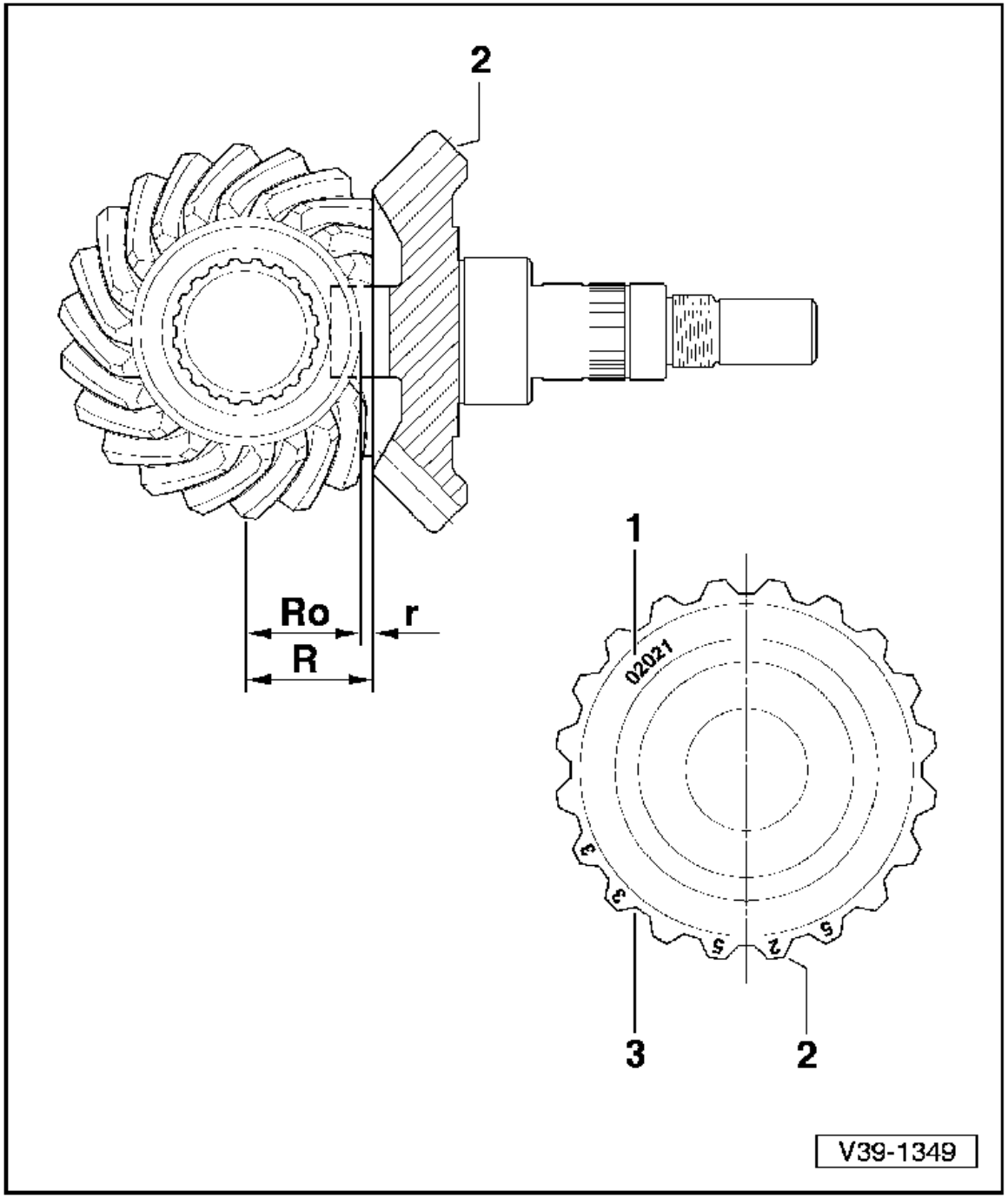

1 - Identification 02021; signifies Oerlikon gear set with a ratio of 20:21.

2 - Gear set pairing number (525).

3 - Deviation (tolerance) "r" is based on the test machine master gauge used in the production. The deviation "r" is always given in 1/100 mm. Example: "33" signifies r = 0.33 mm

- Ro -Length of test machine master gauge used. "Ro" = 36. 20 mm

- R -Actual dimension between bevel gear and face of shaft bevel gear at point with quietest running for this gear set.