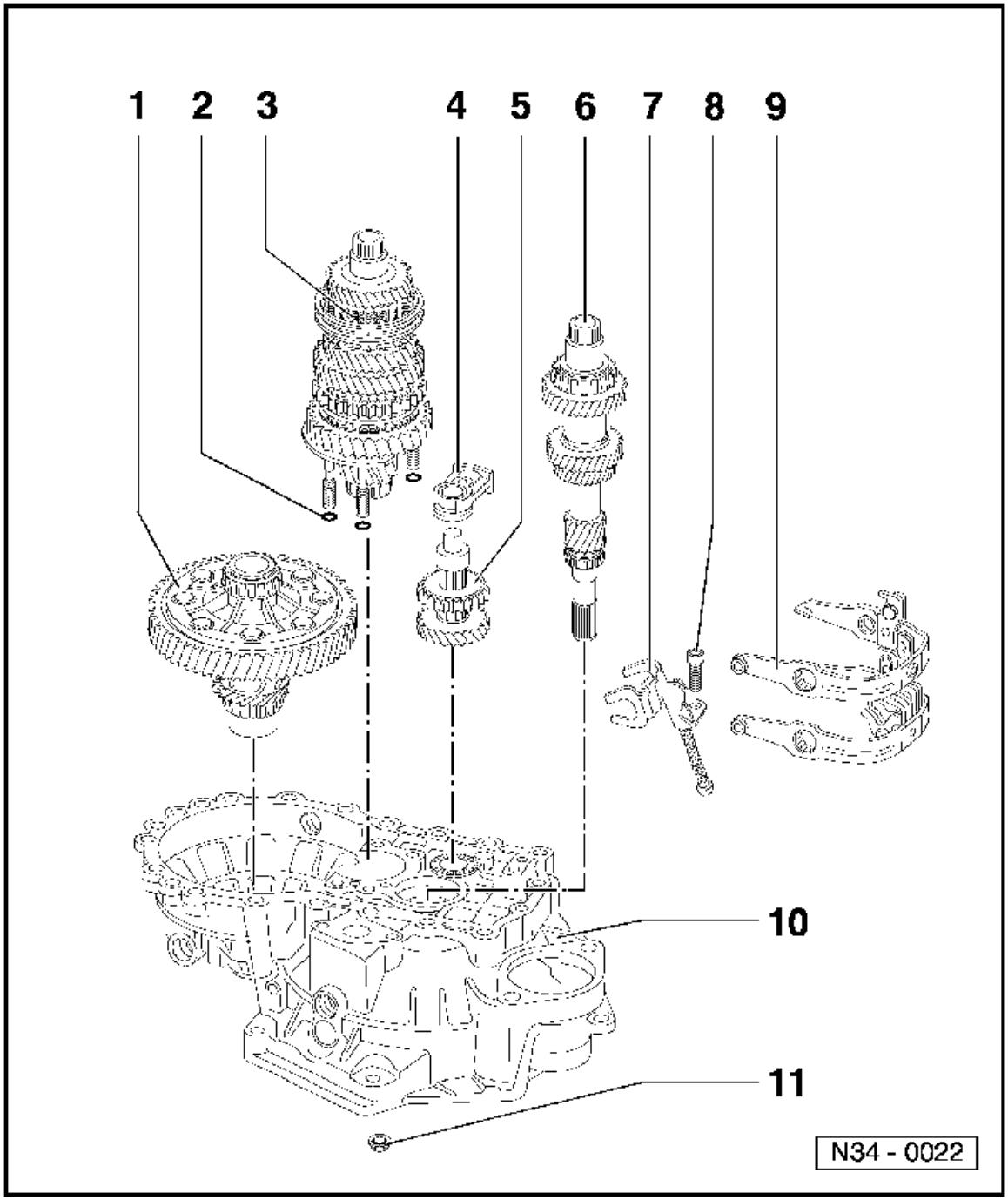

1 - Differential
- ◆ Dismantling and assembling => Page 39-8

2 - Sealing ring
- ◆ Qty. 4
- ◆ Always renew

3 - Output shaft
- ◆ Dismantling and assembling => Page 35-19

4 - Reverse shaft support
- ◆ Dismantling and assembling => Page 35-48

5 - Reverse shaft
- ◆ Dismantling and assembling => Page 35-47

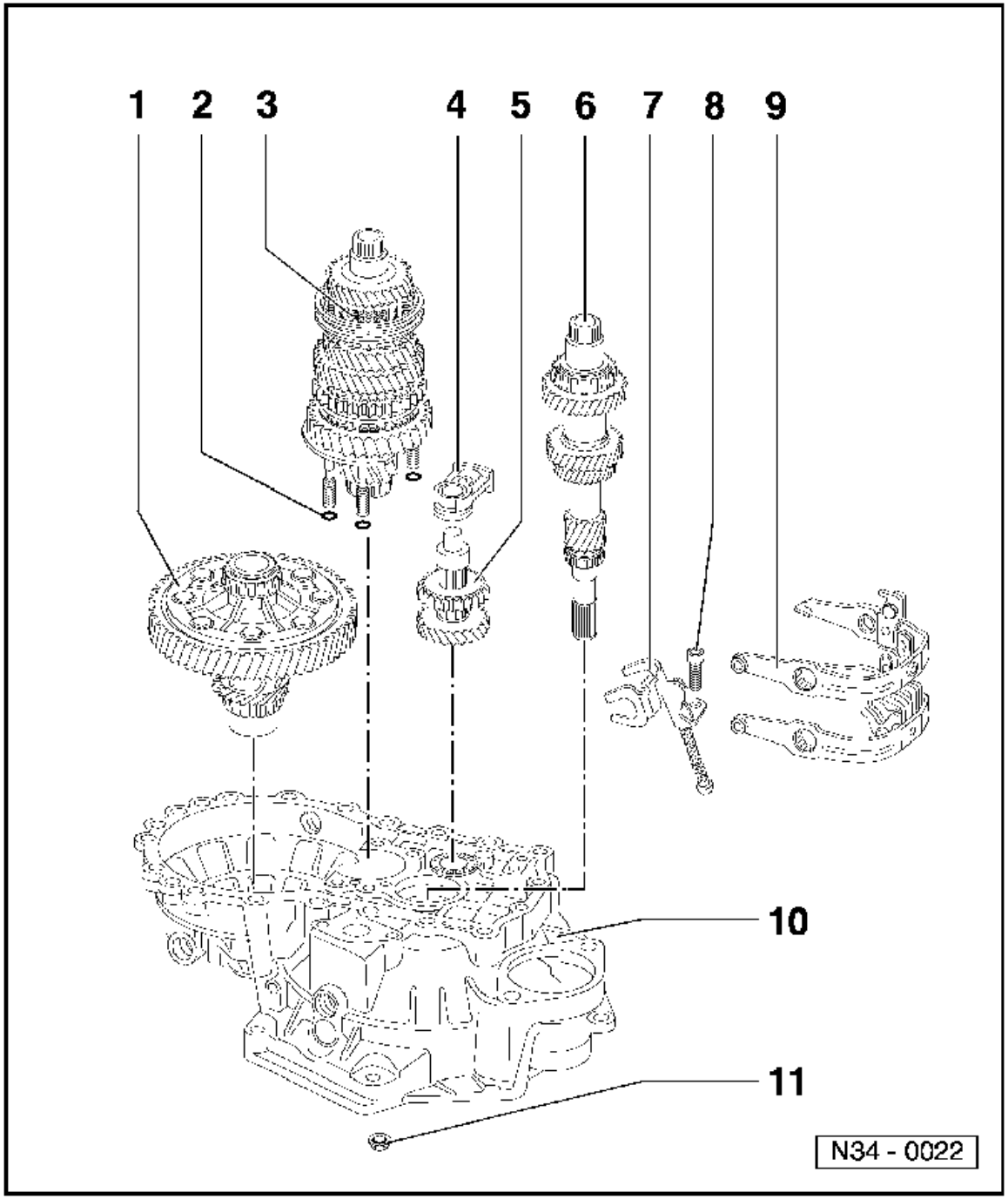

6 - Input shaft
- ◆ Dismantling and assembling => Page 35-1

7 - Reverse gear selector fork
- ◆ Dismantling and assembling => Page 34-124
- ◆ Installation position => Page 34-99

8 - Torx socket head bolt, 25 Nm

9 - Selector mechanism
- ◆ (Selector forks)
- ◆ Dismantling and assembling => Page 34-124

10 - Clutch housing
- ◆ Servicing => Page 34-109

11 - Hexagon nut, 25 Nm and then turn 90° further
- ◆ 4 nuts for bearing support